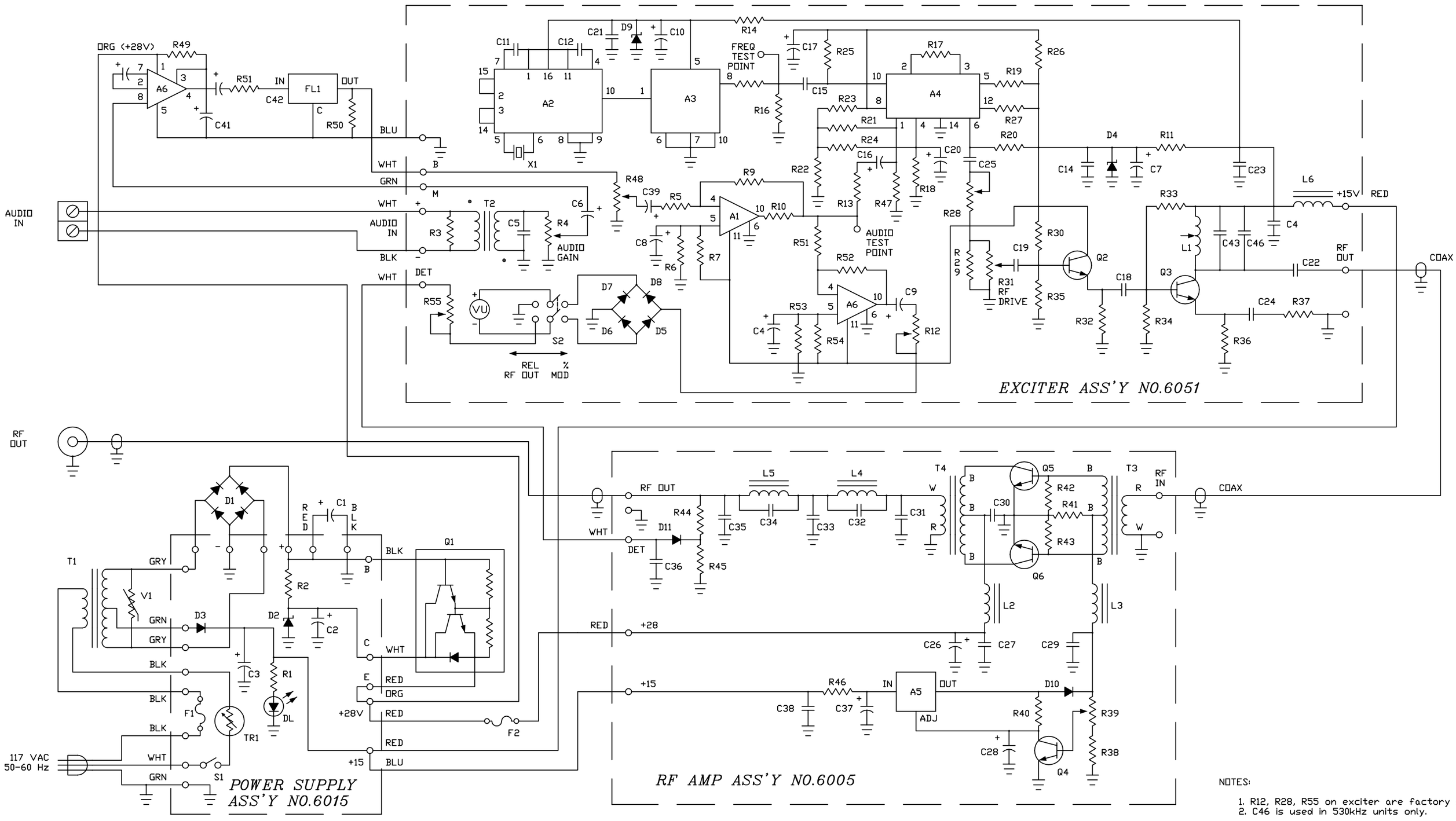


NOTES:

1. R12, R28, R55 on exciter are factory set.
2. C46 is used in 530kHz units only.