RCA

BROADCAST AND COMMUNICATIONS PRODUCTS

Type BC-3C Standard Consolette

MI-11641-A (115 V)

MI-11641-B (220 V)

IB-24789-5

EQUIPMENT LOST OR DAMAGED IN TRANSIT

When delivering the equipment to you, the truck driver or carrier's agent will present a receipt for your signature. Do not sign it until you have (a) inspected the containers for visible signs of damage and (b) counted the containers and compared with the amount shown on the shipping papers. If a shortage or if evidence of damage is noted, insist that notation to that effect be made on the shipping papers before you sign them.

Further, after receiving the equipment, unpack it and inspect thoroughly for concealed damage. If concealed damage is discovered, immediately notify the carrier, confirming the notification in writing, and secure an inspection report. This item should be unpacked and inspected for damage WITHIN 15 DAYS after receipt. Report all shortages and damages to RCA, Broadcast and Television Department, Camden 2, N. J.

Radio Corporation of America will file all claims for loss and damage on this equipment so long as the inspection report is obtained. Disposition of the damaged item will be furnished by RCA.

REPLACEMENT PARTS AND ENGINEERING SERVICE

RCA field engineering service is available at current rates. Requests for field engineering service may be addressed to your RCA Broadcast Field Representative or the RCA Service Company, Inc., Broadcast Service Division, Camden, N. J. Telephone: WOodlawn 3-8000.

When ordering replacement parts, please give symbol, description, and stock number of each item ordered.

The part which will be supplied against an order for a replacement item may not be an exact duplicate of the original part. However, it will be a satisfactory replacement differing only in minor mechanical or electrical characteristics. Such differences will in no way impair the operation of the equipment. Parts with no stock numbers are standard components. They are not stocked by RCA and should be obtained from your local electronic parts distributor.

The following tabulations list service parts and electron tube ordering instructions according to your geographical location.

SERVICE PARTS

LOCATION	ORDER SERVICE PARTS FROM:
Continental United States, including Alaska and Hawaii	RCA Parts and Accessories Department, P.O. Box 654, Camden, New Jersey or through your nearest RCA Regional Office. Emergency orders may be telephoned, telegraphed, or teletyped to RCA Emergency Service, Bldg. 60, Camden, N. J. (Telephone: WO 3-8000).
Dominion of Canada	RCA Victor Company Limited, 1001 Lenoir Street, Montreal, Quebec or through your local Sales Representative or his office.
Outside of Continental United States, Alaska, Hawaii and the Dominion of Canada	RCA International Division, Clark, N. J., U.S.A. or through your local Sales Representative.

ELECTRON TUBES

LOCATION	ORDER ELECTRON TUBES FROM:
Continental United States, including Alaska and Hawaii	Local RCA Tube Distributor.
Dominion of Canada	RCA Victor Company Limited, 1001 Lenoir Street, Montreal, Quebec or through your local Sales Representative or his office.
Outside of Continental United States, Alaska, Hawaii and the Dominion of Canada	Local RCA Tube Distributor or from: Tube Department RCA International Division 30 Rockefeller Plaza New York 20, New York, U.S.A.

RETURN OF ELECTRON TUBES

If for any reason, it is desired to return tubes, please return them through your local RCA tube distributor, RCA Victor Co. Ltd., or RCA International Div., depending on your location.

Please do not return tubes directly to RCA without authorization and shipping instructions.

It is important that complete information regarding each tube (including type, serial number, hours of service and reason for its return) be given. When tubes are returned, they should be shipped to the address specified on the Return Authorization form. A copy of the Return Authorization and also a Service Report for each tube should be packed with the tubes.

LIST OF RCA SALES OFFICES

Atlanta 3, Georgia
1121 Rhodes-Haverty Bldg.
134 Peachtree St. N.W.
JAckson 4-7703

Boston 16, Mass.
Room 2301, John Hancock Bldg.
200 Berkley St.
HUbbard 2-5765

Camden 2, N. J.
Building 15
WOodlawn 3-8000

Charlotte 4, N. C.
504 Charlottetown Mall
333-3996

Chicago 54, Ill.
1186 Merchandise Mart Plaza
DElaware 7-0700

Cleveland 15, Ohio
1600 Keith Bldg.
CHerry 1-3450

Dallas 35, Texas
7901 Empire Freeway
FLeetwood 2-3911

Detroit 39, Mich.
12605 Arnold St.
KEnwood 4-5100

Hollywood 28, Calif.
RCA Bldg., 1560 N. Vine St.
HOllywood 9-2154

Indianapolis, Ind.
501 N. LaSalle St.
MElrose 6-5321

Kansas City 15, Missouri
7711 State Line Road
EMerson 1-6770

New York 20, New York
36 W. 49th St.
JUdson 6-3800

Paterson, N. J.
495 E. 30th St.
MUlberry 4-0972

Portland 5, Oregon
1208 S.W. 14th St.
CApitol 6-6828

San Francisco 2, Calif.
420 Taylor St.
ORdway 3-8027

Seattle, Washington
2250 First Ave., S.
MAin 2-8350

Washington 6, D. C.
1725 K St., N.W.
FEderal 7-8500

INSTRUCTIONS

Type BC-3C

Standard Consolette

MI-11641-A (115 V)

MI-11641-B (220 V)

In order to make improvements in design and effect economies in manufacture, RCA reserves the right to make changes in design, components, and specifications published herein.

RADIO CORPORATION OF AMERICA
BROADCAST AND COMMUNICATIONS PRODUCTS DIVISION
CAMDEN, NEW JERSEY

PRINTED IN U.S.A.

IB-24789-5

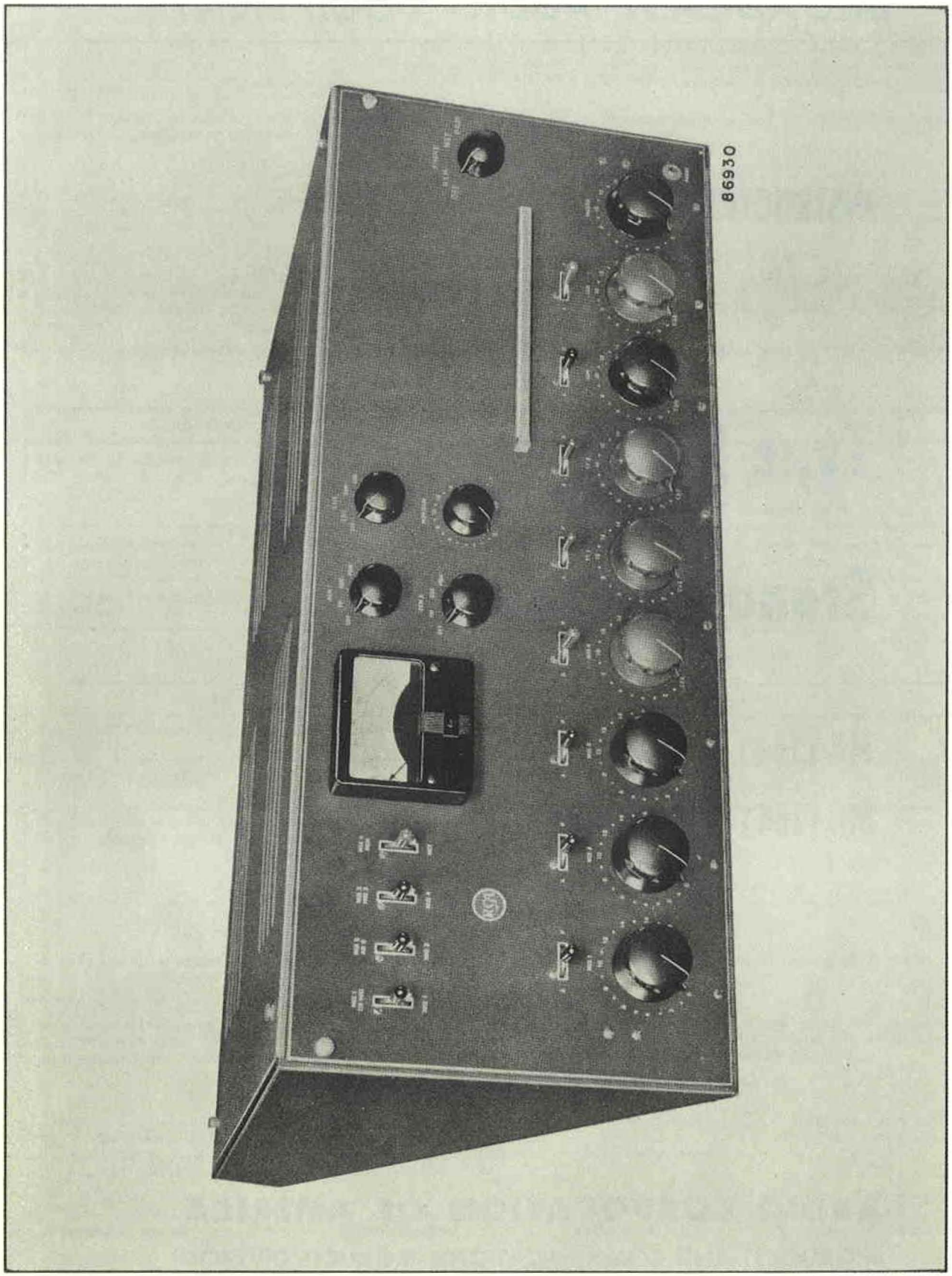

Figure 1—Type BC-3C Standard Consolette

TECHNICAL DATA

Power Required

155 watts

Inputs

6 microphones (4 Studio, 1 Control Room, 1 Announce Booth)	37.5/150/600 ohms
2 turntable inputs	150 ohms
2 Remote Lines	600 ohms
1 Network	600 ohms
1 Tape	150 ohms
1 Auxiliary	150 ohms
1 External Monitor	600 ohms

Outputs

1 Program Line	600 ohms	18 dbm
2 Monitor Speakers	16 ohms	3 W each
1 External Monitor	600 ohms	- 6 dbm
2 Remote Lines Cue	600 ohms	18 dbm
1 Turntable Cue	150 ohms	

Amplifiers

3 Preamplifier
2 Preamplifiers used as Boosters
1 Program Amplifier
1 Monitor Amplifier

Signal to Noise Ratio

With MIXER, MASTER and MON GAIN controls set to 10 and a —50 dbm reference signal applied to the microphone or turntable inputs, or 16 dbm applied to the network or remote line inputs, hum and noise:
68 db below reference at program line output
66 db below reference at monitor output

Gain

Microphone to Program Line	108 db
Network or Remote to Program Line	32 db
Turntable, Tape or Auxiliary to Program Line	64 db
Microphone to Speaker (Audition)	124 db
Microphone to Speaker (Program)	144 db
Microphone to External Monitor	84 db
Microphone to Remote Line (Cue)	106 db
Network to Speaker (Audition)	48 db
Network to Speaker (Program)	68 db

Frequency Response

Program:	±1.5 db	30 to 15,000 cps
Monitor:	±2.5 db	30 to 15,000 cps

Harmonic Distortion

Program	18 dbm output	1%	30 cps, .75% 50 cps,
		0.5%	100-15,000 cps
Monitor		6w	total
		1.5%	50-10,000 cps

Tube Complement (MI-11486-A)

(Not Supplied)

2 6V6GT
2 12AU7
2 12AX7
1 5R4GY
5 12AY7
5 MI-11299 (selected 12AY7)

Dimensions and Weight

Width—33 inches
Height—11¼ inches
Depth—21¼ inches
Weight—88 pounds
Finish: two tone umber gray

DESCRIPTION

The BC-3C Standard Consolette is designed to handle the programming schedules of a station equipped with one or two studios, an announce booth, a control room, two turntables, one tape recorder and one auxiliary such as a film projector. The thirteen inputs include six microphones, two turntables, one tape, one network, two remote and one auxiliary.

The network and remote lines may be monitored by using the phone jack. Eight inputs may be simultaneously mixed. Separate audition and program channels are provided and the monitoring amplifier may be switched to the turntable cue position, program line, audition line or external input.

The BC-3C is completely self-contained, including the amplifiers and power supply. The unit is styled for convenience in operation, with the logical arrangement of controls using colored knobs and for convenience in servicing, with the hinged front panel and removable louvred top cover.

The console housing is compact and designed to match the styling of other RCA Audio consolettes such as the BC-5B or the BC-6B. All these units are designed to be mounted on a flat desk or surface. Another convenient feature is the script holder which keeps the program where the operator may check it.

Associated Equipment

The necessary auxiliary units such as microphones, loudspeakers, turntables, tape recorders and warning lights, may be selected from the RCA catalogs. A separate sheet of instructions is packed with each unit.

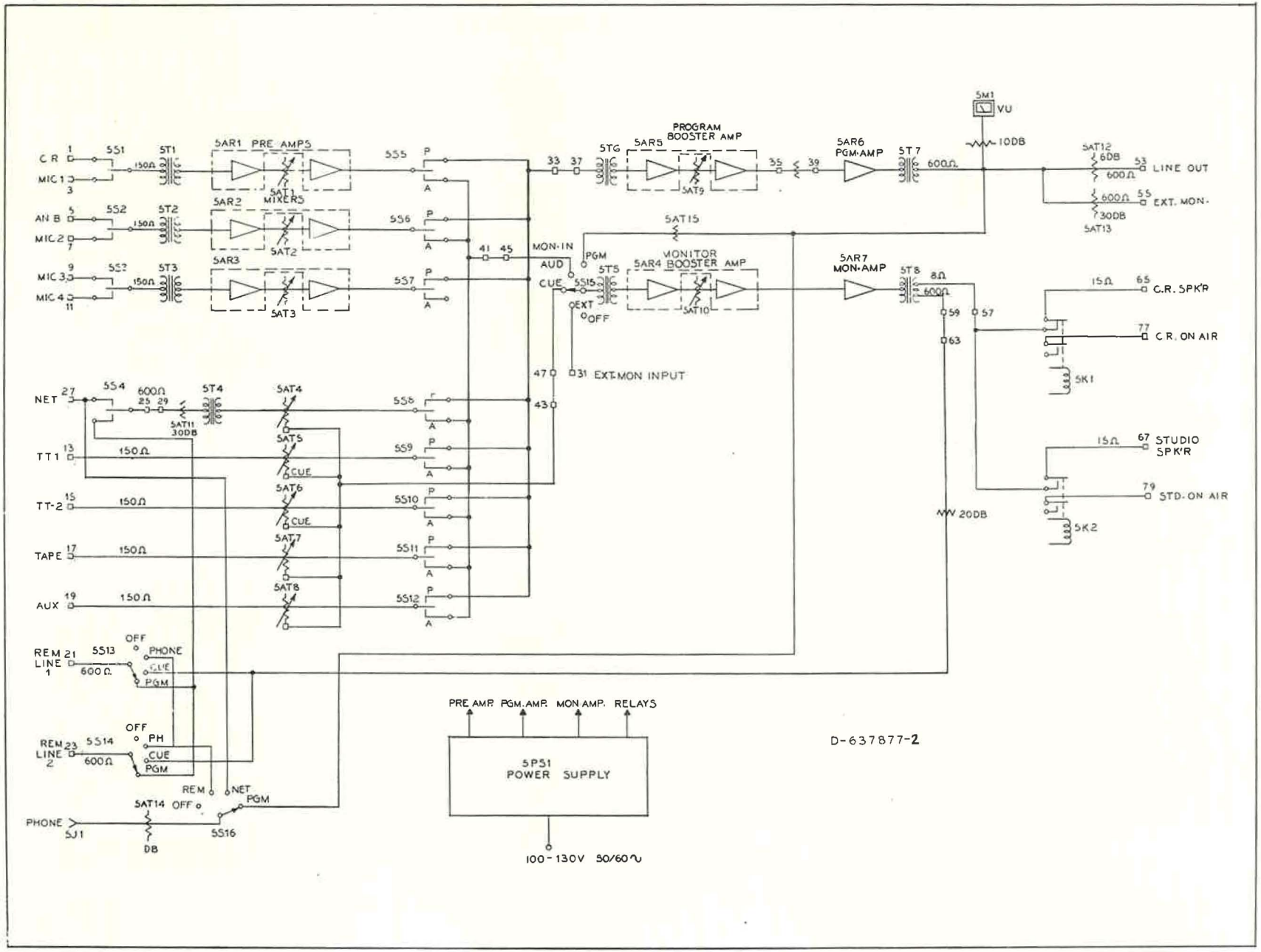

Figure 2—Block Diagram

In regard to loudspeakers, however, a few points should be emphasized. Facilities are provided for two speakers. A third speaker may be added by addition of accessory speaker relay kit MI-11748. The loudspeaker should have a voice coil impedance of 15 ohms, or an impedance matching transformer MI-11731 must be provided.

As to warning lights, the MI-11706 Series are recommended for the Studio and Control Room. The lights which are available with inscription, are listed as follows:

ON AIR	MI-11706-1
REHEARSAL	MI-11706-2
AUDITION	MI-11706-3
STANDBY	MI-11706-4
SILENCE	MI-11706-5

An MI-11702-A Warning Light Relay is recommended for each warning light.

Circuit Description

The BC-3C Consolette amplifiers are constructed on individual etched circuit boards. External connections are made through turret type terminals on each board. The boards are secured with standard hardware to a metal chassis and are easily loosened or removed to gain access to the etched wiring.

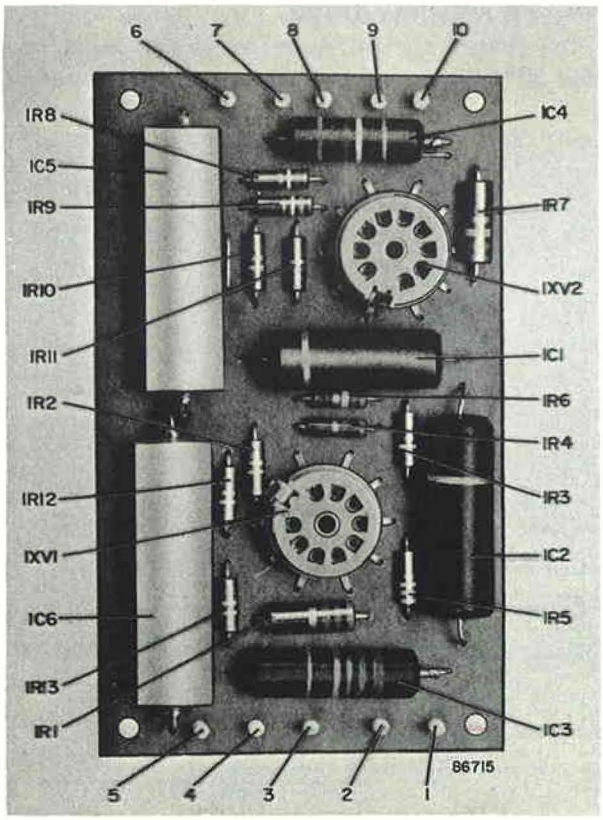

Figure 3—Preamplifier (5AR1—5AR3) Printed Circuit Board

Preamplifiers 5AR1 to 5AR3

The circuit of the microphone preamplifiers is shown in the schematic diagram of figure 5. The input signal is derived from an unloaded step-up transformer which is mounted under the preamplifier mounting shelf and is applied to the grid of the input stage. This stage is RC coupled to the second stage, with negative feedback from the plate of the second stage applied to the cathode of the input stage. This minimizes distortion at high input levels. A MI-11299 tube which is a 12AY7 selected for low noise is used in this stage. The output of the second stage is connected through the coupling capacitor 1C2 to a potentiometer type MIXER gain control and hence to the grid of the third stage. The output of this stage is capacitively coupled to the cathode follower output stage. A 12AY7 tube is used here. To eliminate any d-c output voltage which could produce switching clicks, two capacitors 1C5 and 1C6 are connected in series between the cathode and the output terminal with shunt resistors 1R12 and 1R13 bleeding any charge to ground. The voltage gain of the amplifier is approximately 46 db. An input signal to the transformer primary of —50dbm produces an output signal of approximately one volt.

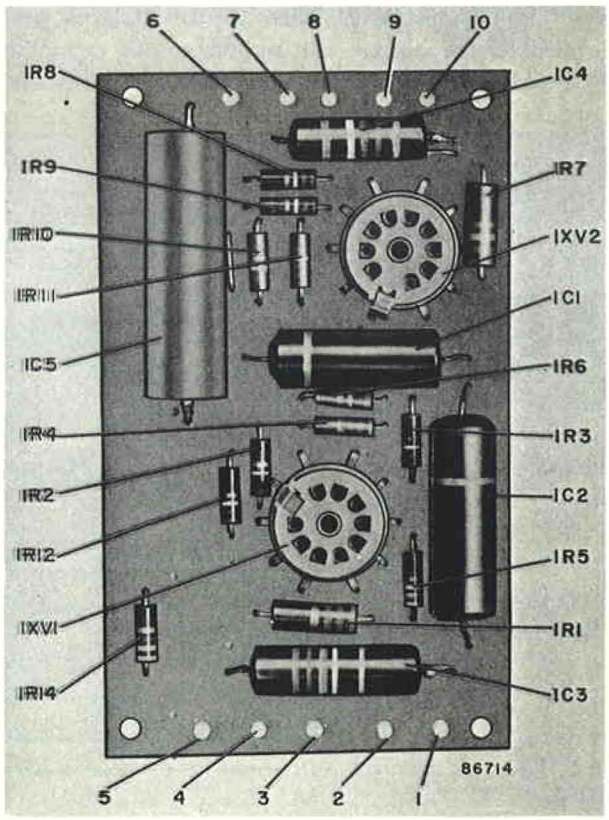

Figure 4—Preamplifier (5AR4, 5AR5) Printed Circuit Board

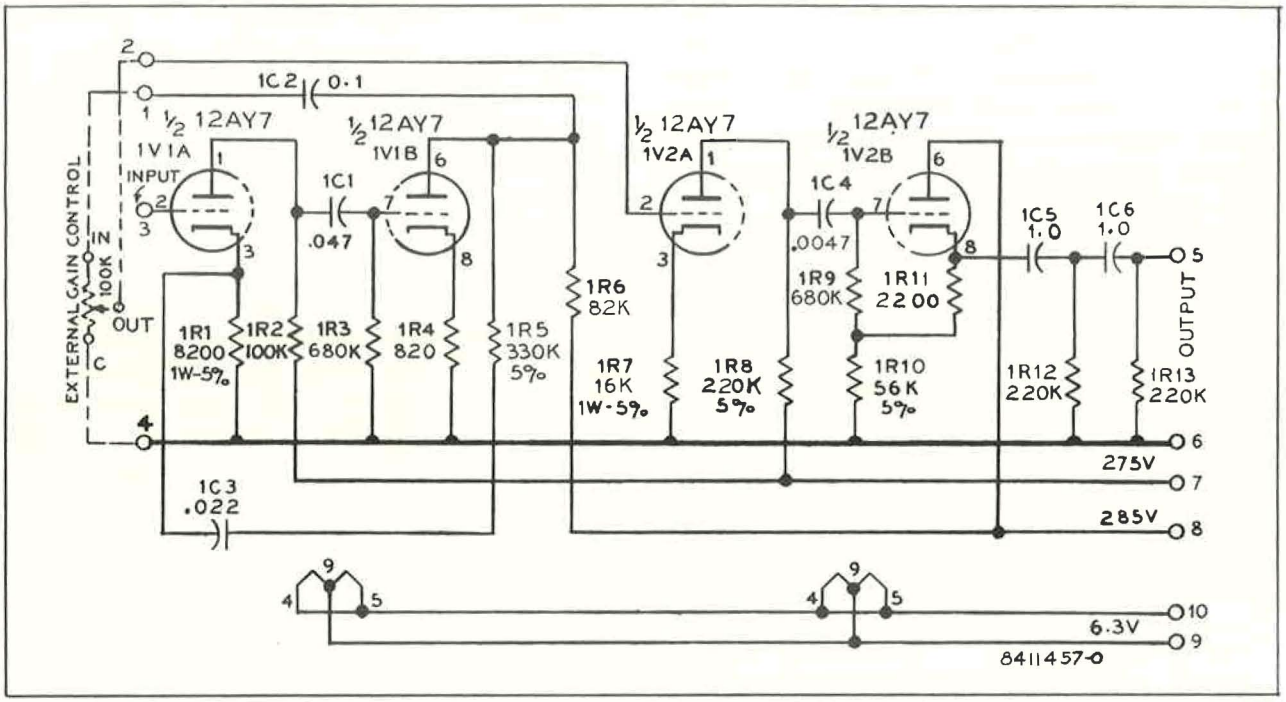

Figure 5—Schematic Diagram for Preamplifier (5AR1—5AR3)

Booster Preamplifiers 5AR4, 5AR5

As shown in figure 6, this amplifier is similar to the one shown above. Since no switching is performed in the output, the second output capacitor 1C6 and shunt resistor 1R13 are omitted. A series resistor 1R14 is added to roll off of the high frequency response above 15 kc.

Program Amplifier 5AR6

The program amplifier etched circuit board contains all the electrical components except the output

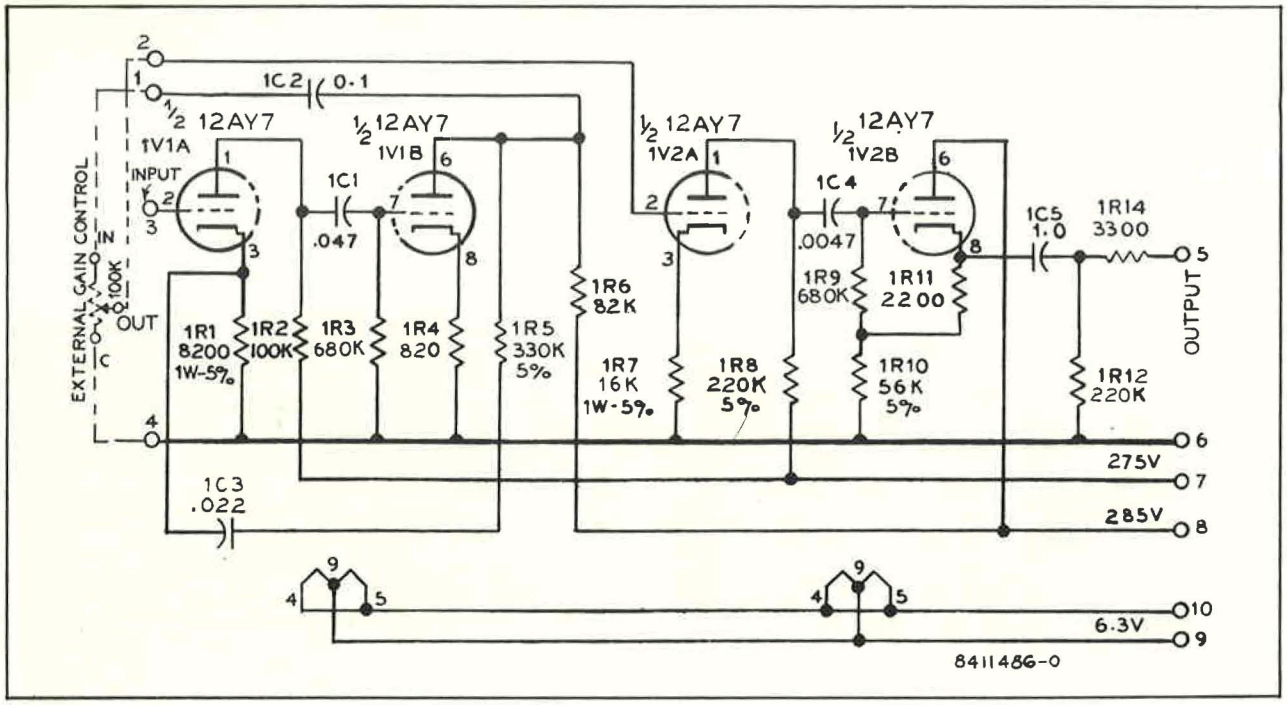

Figure 6—Schematic Diagram for Preamplifier (5AR4, 5AR5)

transformer 5T7 which is mounted on the chassis directly in front of the amplifier. A 12AX7 twin triode is used for the input and phase inverter stage, driving two 12AU7 twin triodes which are connected in push-pull parallel. Negative feedback is derived from a tertiary winding on the output transformer. An input voltage of approximately 1.35 volts is required to obtain an output of 30 dbm.

Monitor Amplifier 5AR7

The circuit and construction of the monitor amplifier are similar to the program amplifier. The output transformer 5T8 is mounted directly in front of the monitor amplifier printed circuit boards. To obtain a rated output level of 6 watts, a pair of 6V6GT tubes are used in a push-pull output stage. Approximately 1.32 volts input are required to obtain 1 watt output. The transformer secondary has taps for 600/150/16/8/4 ohm loading.

Power Supply 5PS1

The power supply is designed for operation from a 100-130 volt 50/60 cycle or a 205-240 volt 50/60 cycle power line. Transformer primary taps are available for nominal line voltages of 105/205, 115/220 and 125/240 volts. The plate supply voltages are obtained from a 5R4GY full-wave rectifier tube and filtered by several stages of RC networks which

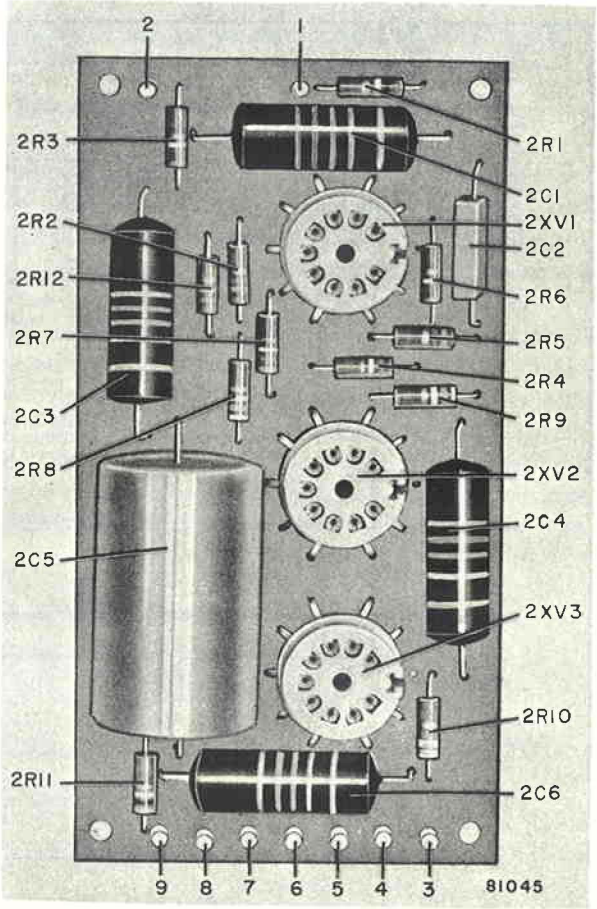

Figure 7—Program Amplifier 5AR6 Printed Circuit Board

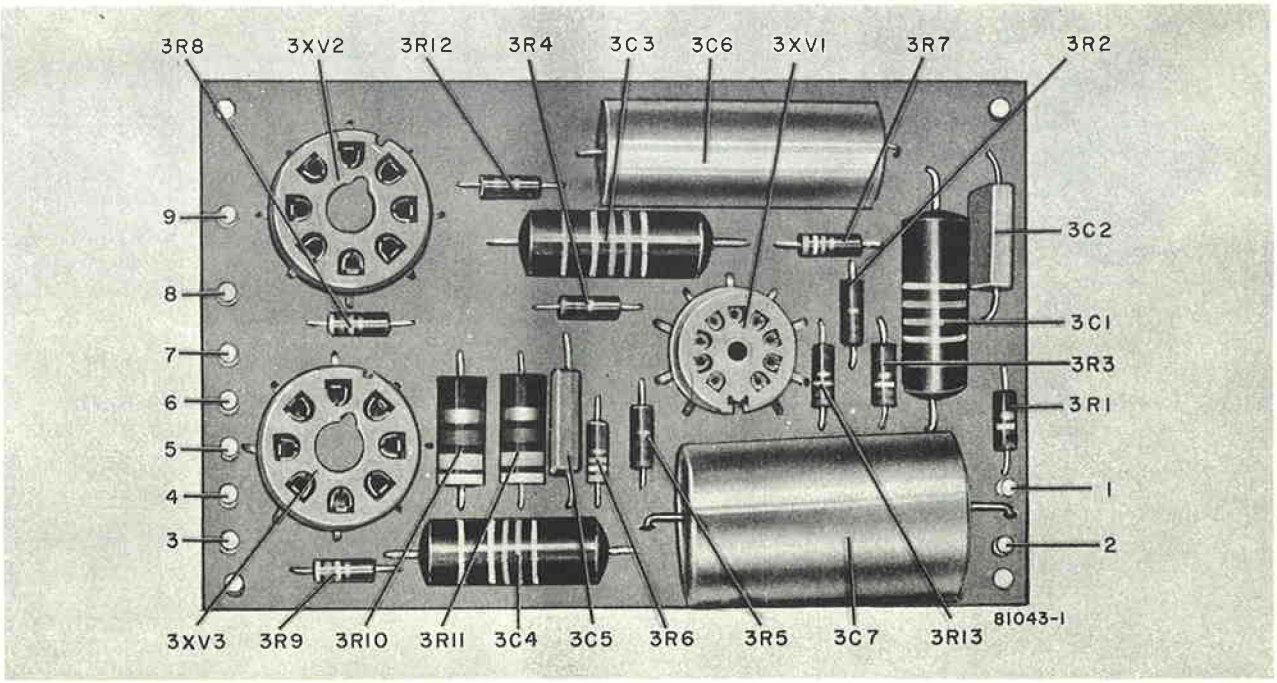

Figure 8—Monitor Amplifier 5AR7 Printed Circuit Board

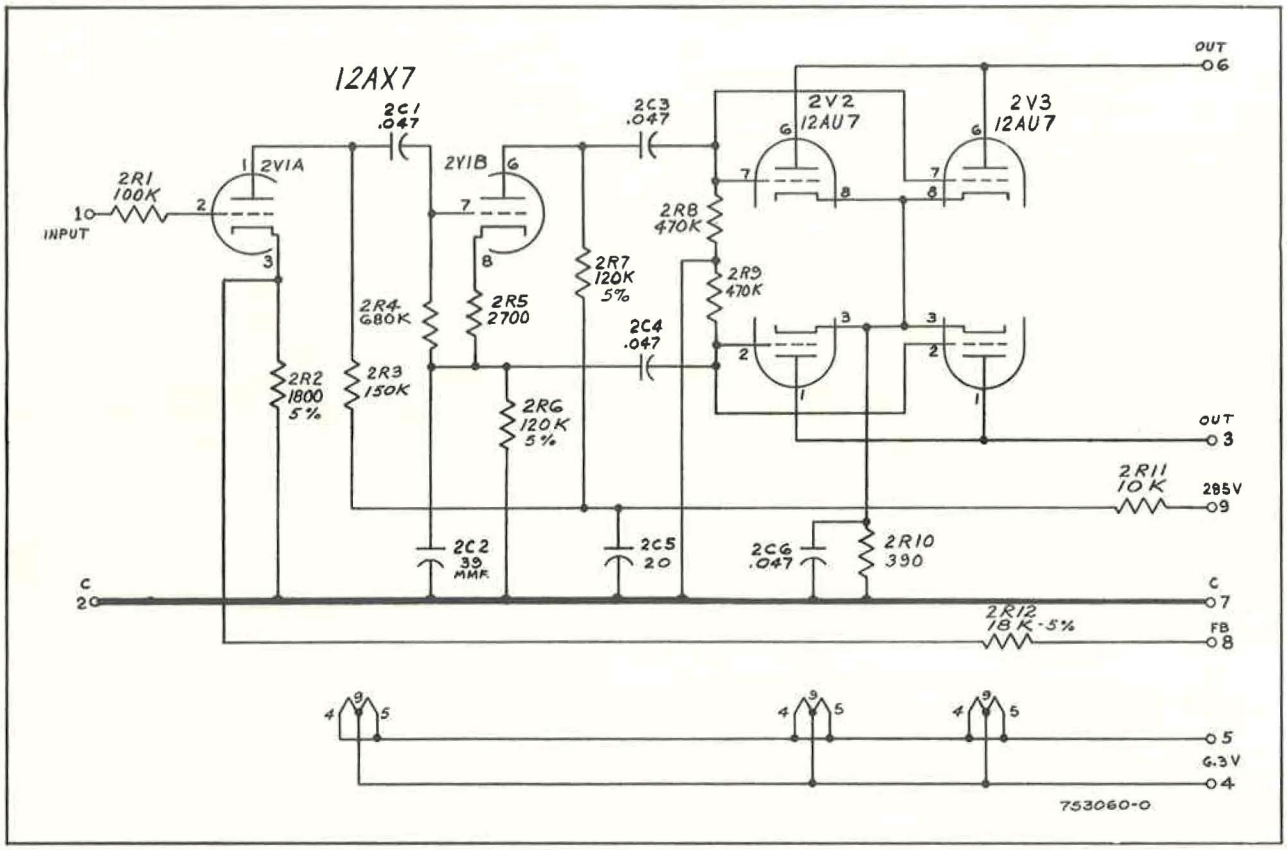

Figure 9—Schematic Program Amplifier 5AR6

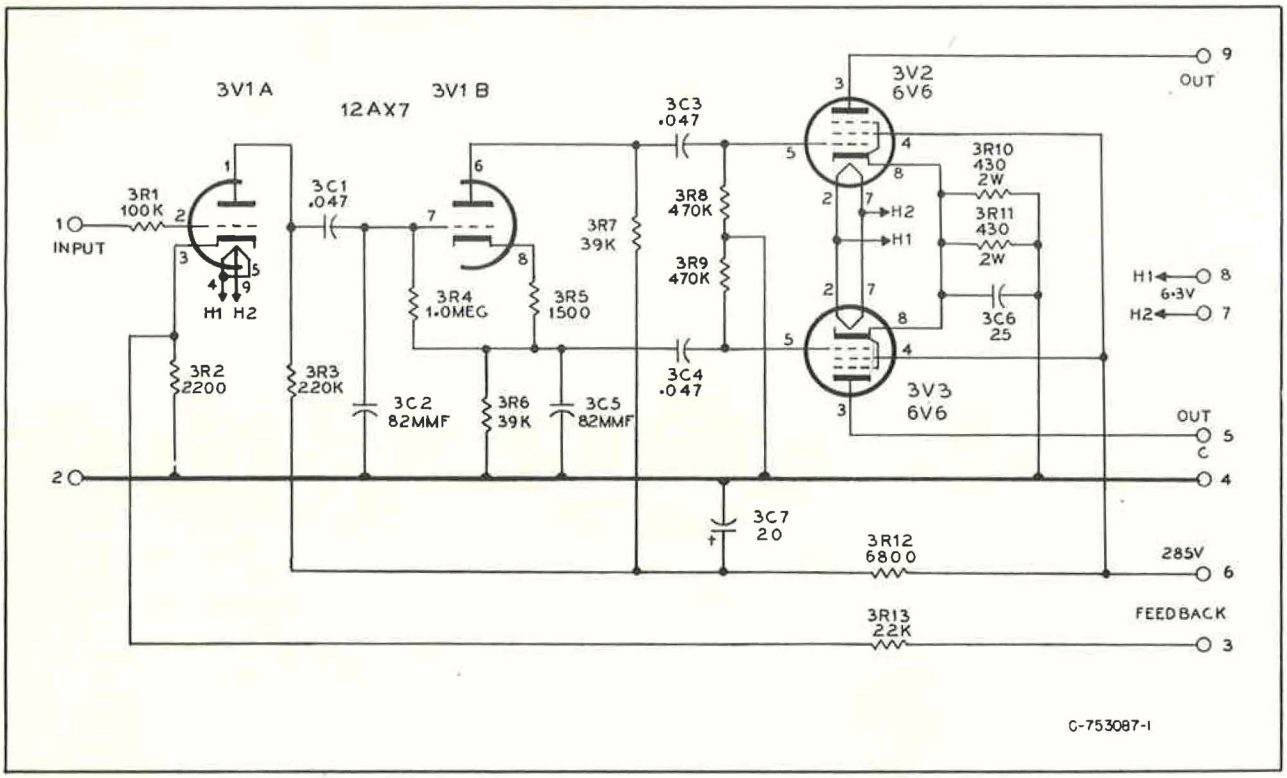

Figure 10—Schematic Monitor Amplifier 5AR7

provide both isolation and sufficiently low ripple for the various amplifier stages. The 6.3v heater winding connects through a hum adjustment potentiometer to a positive bias voltage to minimize hum due to heater to cathode leakage. A full wave bridge type selenium rectifier supplies d.c. power to the speaker relays. A tap is provided on the transformer winding to compensate for aging of the rectifier.

Fixed Pads

Etched wiring techniques are employed in the construction of certain fixed attenuators, the same basic board accommodates various circuit configurations and resistance values. The line input pad 5AT11 is a balanced, center tapped H-type having a loss of 30 db. The line output pad 5AT12 is a balanced H-type having a loss of 6 db. The external monitor pad 5AT13 is of the balanced L-type having a loss of 30 db.

Speaker Muting and Warning Light Relays 5K1 and 5K2

Relay 5K1 controls the control room speaker and control room ON AIR light. Relay 5K2 controls the Studio speaker and Studio ON AIR light. In the de-energized position, the speakers are on and the warning light circuit is open. In the energized position, the speakers are off, a load resistance being connected in their place and the warning light circuit is completed. The relays are controlled by the operation of the microphone selector switches 5S1, 5S2, and 5S3 and the respective Program-Audition switches 5S5, 5S6 and 5S7. The relays are de-energized with the switches in the center (off) position and energized in the other positions. To energize 5K1, 5S1 must be in the CR MIC position. Refer to the chart, page 15.

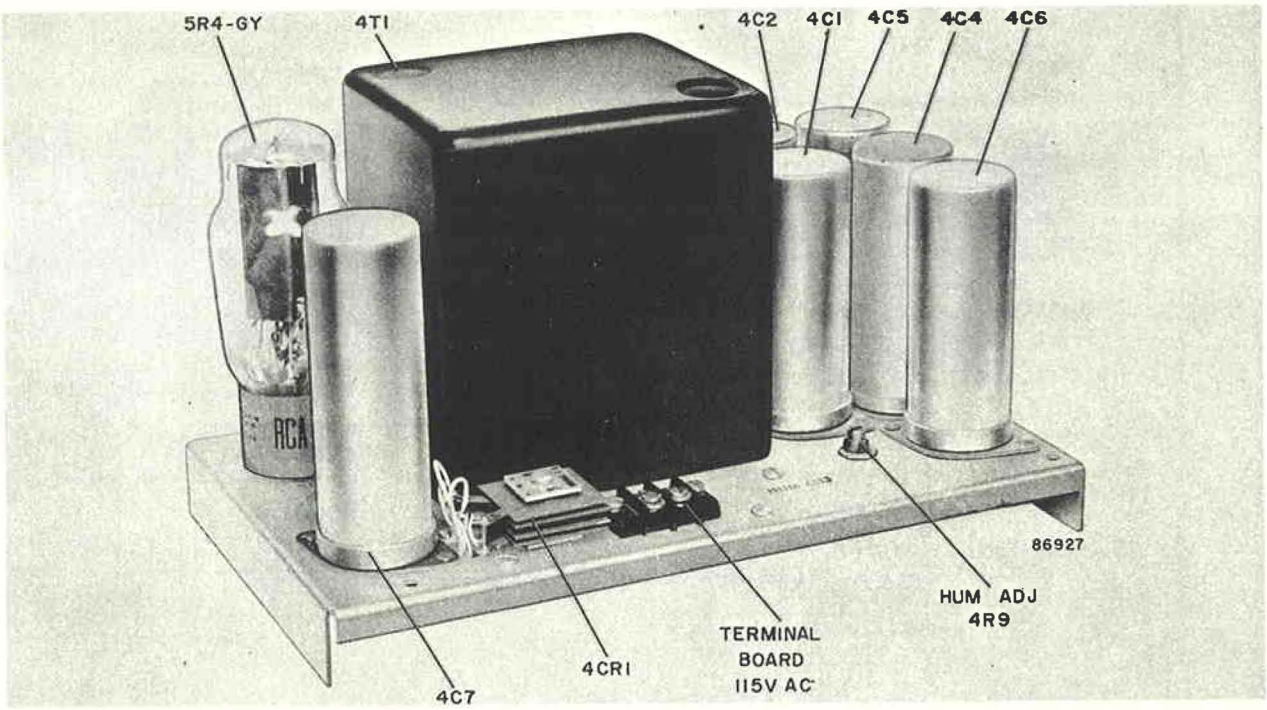

Figure 11—Power Supply 5PS1

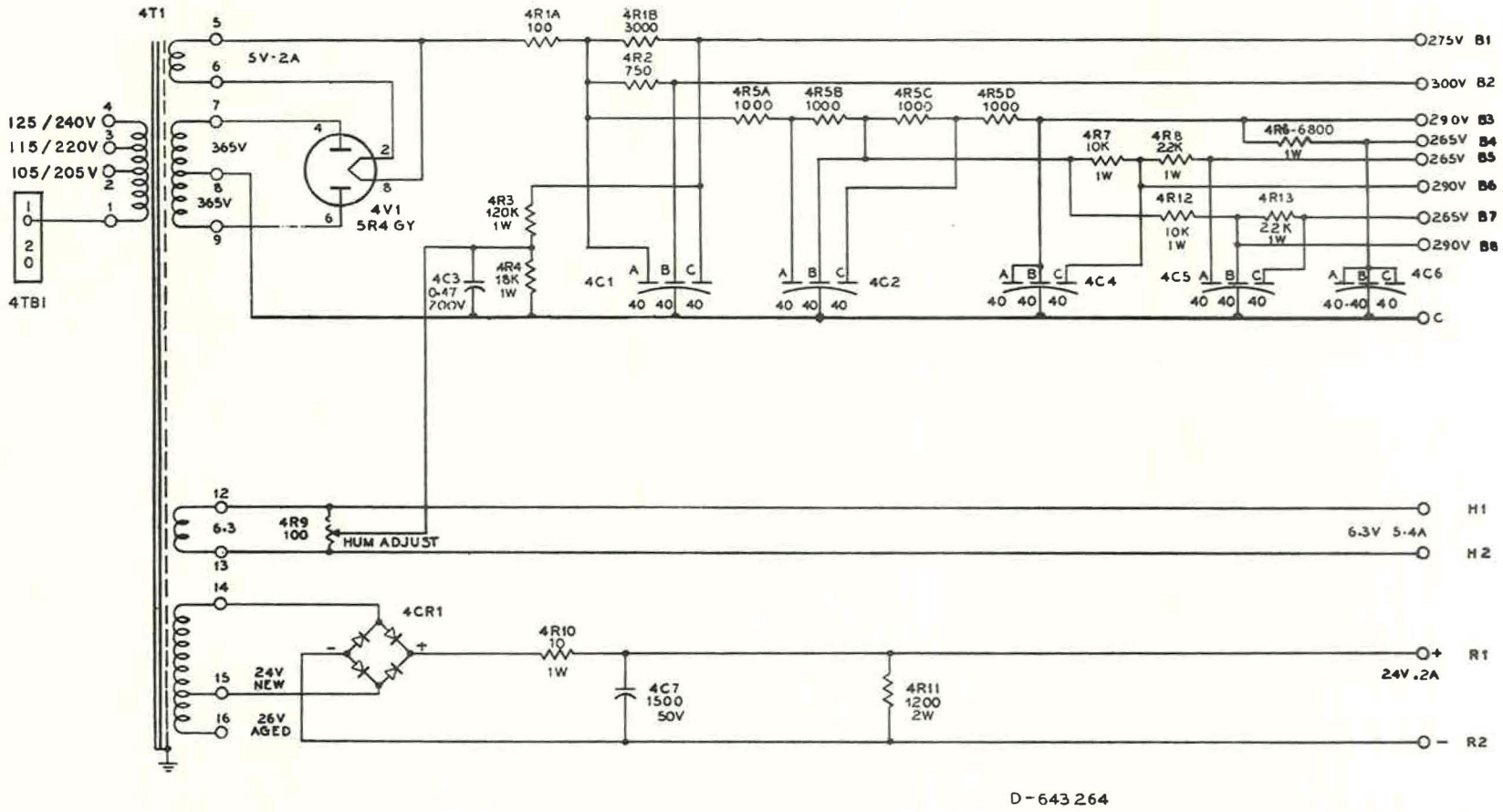

Figure 12—Schematic Diagram of Power Supply 5PS1

WIRE NO INCLUSIVE	WIRE TABLE	PARTS LIST 8905257-502 P.S. OR DWG. NO.	ITEM NO	OPEN NO'S
1 — 11	TINNED COPPER .032DIA.	805-57	50	5,8,9
20 - 22	WHITE - RED 7/0126	805-7	51	
30 - 31	RED/YEL. 7/0126	805-7	52	
40	RED/BLK. 7/0126	805-7	53	
50	7/010	805-6	54	
60 - 62	BLACK		55	60
80	YELLOW		57	
90	BROWN		58	
100	BRN/BLK.		59	
110	ORANGE		60	
120-124	RED/BLUE		61	122
131-133	RED/GRN.		62	
140	RED/YEL.		63	
150-151	WHITE - YEL/GRN. 7/010	805-6	64	
170 176	SLEEVING, BLK. .04. I.D.	8	46	
190	SLEEVING - .133 I.D.	8	44	

NOTES

1- THE FOLLOWING WIRES ARE TWISTED PAIRS.
120&121
20&30
90&100

2- SOLDER ALL ELECTRICAL CONNECTIONS USING ITEM 67

3 BEND TERMINALS OF 4R5 TOWARD BOTTOM OF CHASSIS.

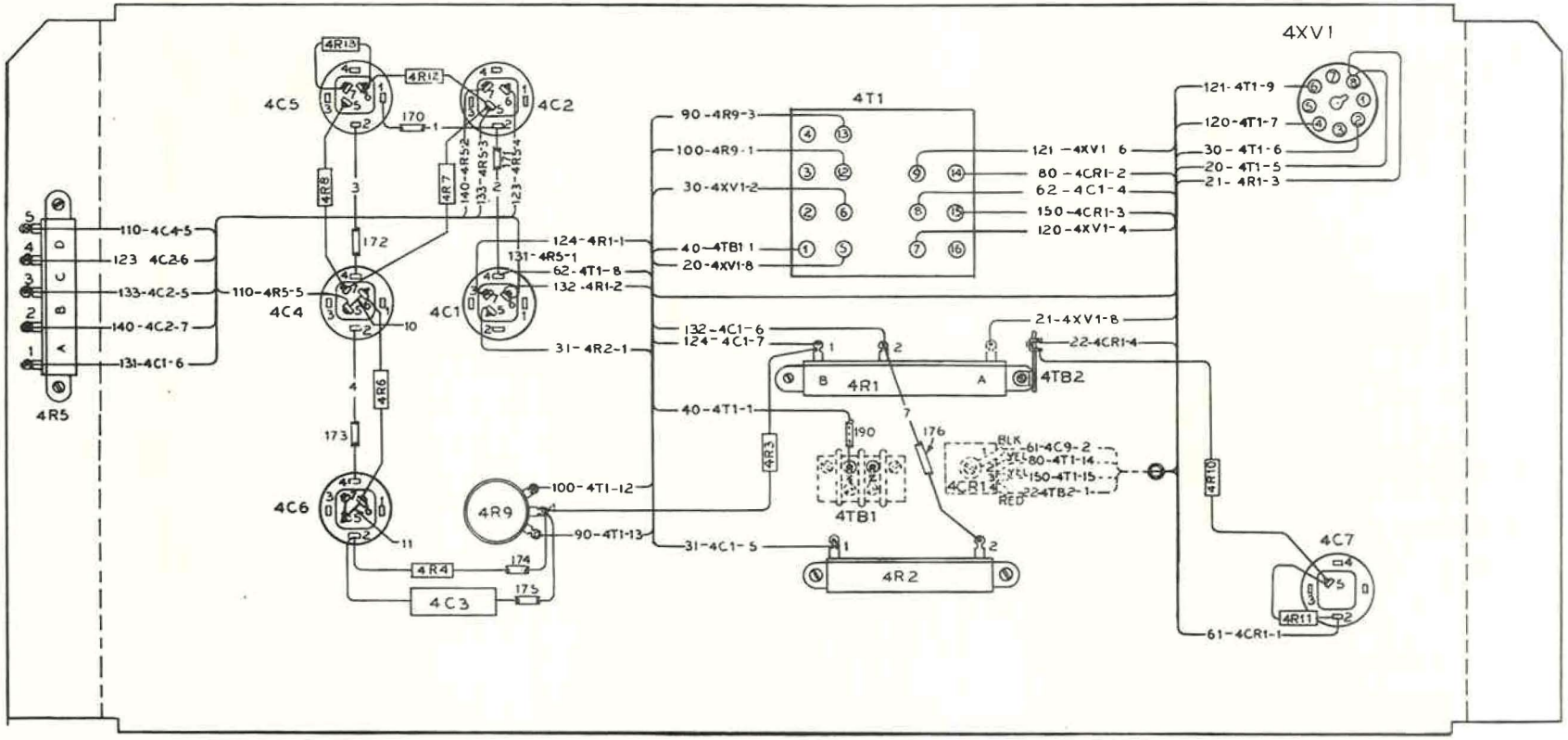

365139-9

Figure 13—Connection Diagram of Power Supply 5PS1

Script Holder

As shown in figure 1, an aluminum bracket is mounted on the right hand side of the control panel. This bracket is designed to hold the clip board which is used in broadcast stations to hold the standard 8½ x 11″ script sheets.

Overall System

As shown in the block diagram, figure 2, the BC-3C Consolette provides eight mixing channels. The output of each mixing channel may be switched to either a program or audition bus by means of the key switches 5S5 through 5S12. The program bus connects through a booster amplifier, master gain control, program amplifier and 6db isolation pad to the program line output terminals. The VU meter and external monitor bridging pad are connected across the output of the program amplifier.

The monitor channel consists of a booster amplifier, monitor gain control and monitor amplifier. The input selector switch gives the choice of monitoring the output of the program amplifier, the output of the audition bus, an external input or a turntable cue. The output of the monitor amplifier connects through the speaker muting relays to the control room and studio speaker output terminals. These relays also actuate the ON AIR warning light relays.

Cue feed to the remote line is supplied by the monitor amplifier through an isolation pad. The two remote line switches select headphone monitoring, cue feed and program receive functions.

INSTALLATION

Location of Consolette

The BC-3C Consolette may be installed on any flat top desk or table of suitable size. A minimum of ½ inch clearance should be allowed between the rear of the consolette and the wall. Refer to the typical installation and dimensional drawings figures 15 and 16.

Removal of Shipping Bolts

Remove the red nuts and lockwashers located at each end of the preamplifier shelf. Remove the shipping screw by pulling through holes on the underside of the consolette housing. Removal of this shipping hardware permits the preamplifier mounting shelf to float freely on its rubber vibration mounts.

Type of Installation

A typical broadcast installation for a one studio system using the BC-3C Consolette is shown in figure 17.

WARNING

Do not remove top cover or open front-panel with power turned on unless thoroughly familiar with this equipment. High voltages appear on the etched wiring boards and terminal blocks. Caution must be exercised when replacing tubes or servicing this equipment with the power turned on.

Tube Installation

Tubes are not supplied with the consolette and must be ordered as MI-11486-A. Insert the tubes in the sockets as called for on figure 22. Install the selected 12AY7 (MI-11299) tubes in the socket nearest the front of the preamplifier and booster amplifier printed wiring boards. Slip the shields over the tubes where tube shield ground straps are provided on the

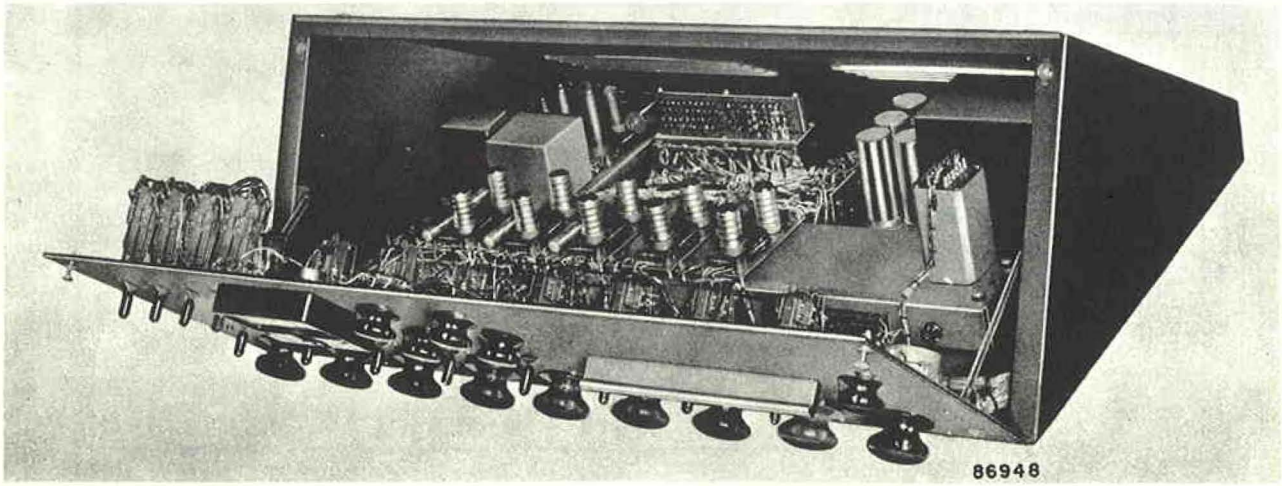

Figure 14—Type BC-3C Consolette with Panel Open

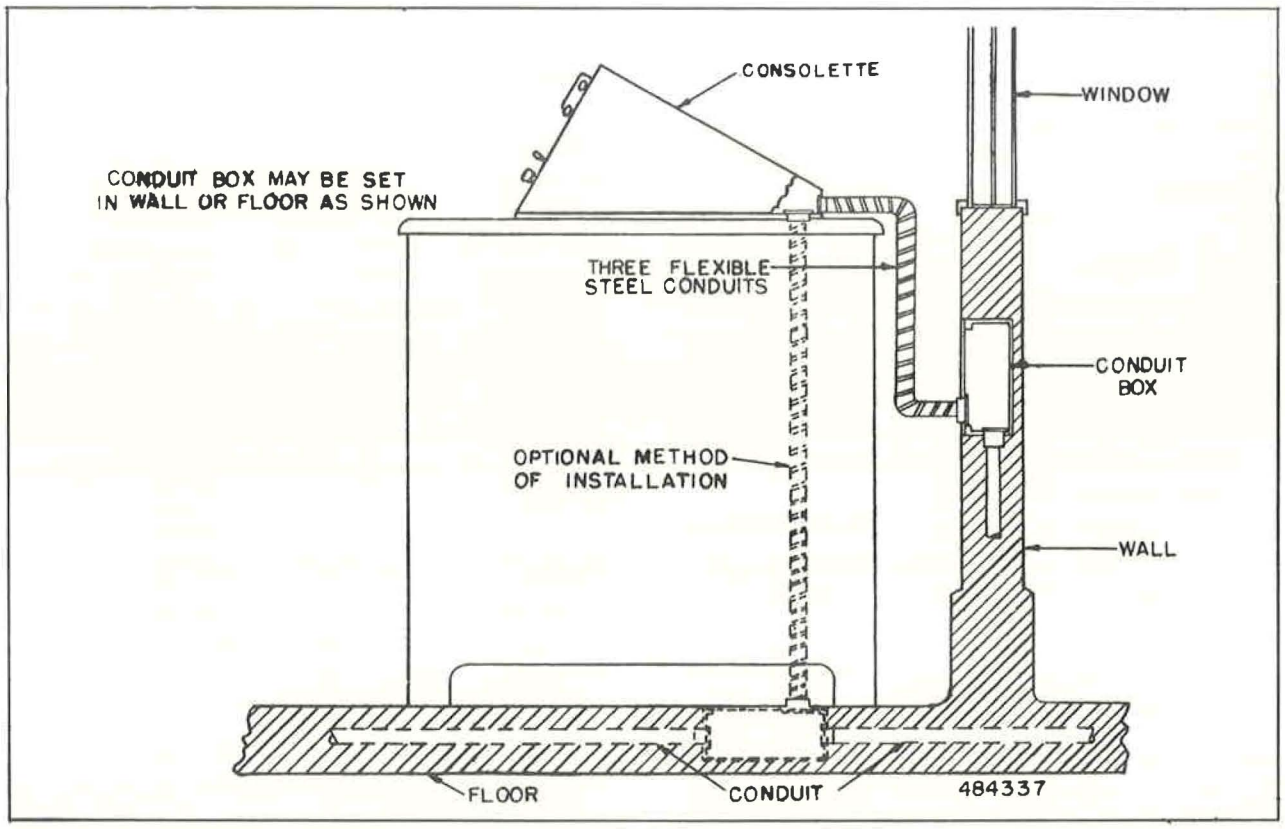

Figure 15—Typical Cable Installation

sockets, making certain that the ground strap is wedged between the tube envelope and the shield.

Power Supply 5PS1 Connections

The consolette is shipped with the power transformer connected for power line voltage of 110 to 120 volts. If the line voltage is outside this range, remove the four screws in each corner of the power supply chassis. Turn the power supply upside down. Remove the wire leading to terminal 3 of the power transformer 4T1. If the line voltage is between 100 and 110 volts, connect this wire to terminal 2; if it is between 120 and 130 volts, connect the wire to terminal 4. Replace the power supply. Connect the ac power line to the barrier type terminal block 4TB1 directly behind the power transformer. For convenience a power switch may be provided externally to turn the consolette on and off.

External Connections

Audio wiring should be segregated into low level (microphone and turntable inputs) and high level (line input and output) cables or conduits. Low level audio lines should be shielded twisted pairs with

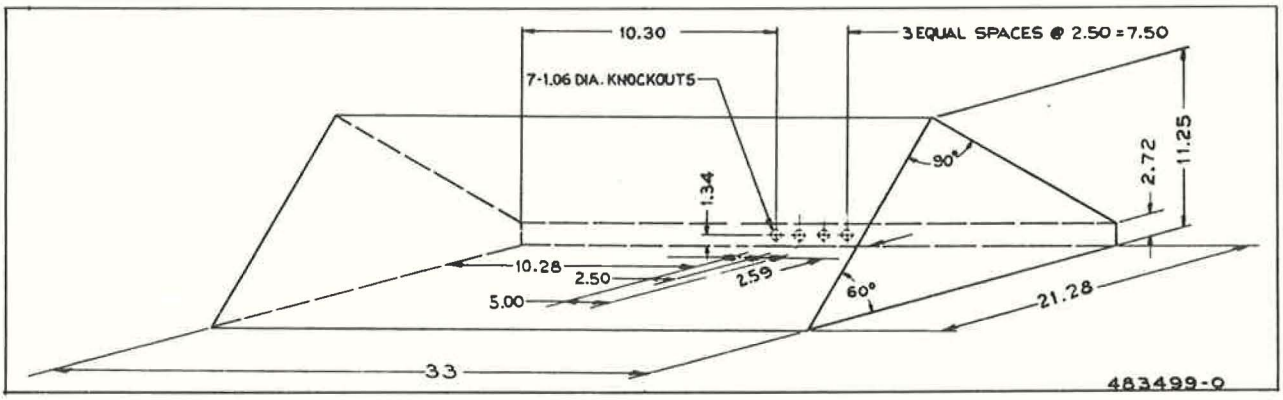

Figure 16—Installation Diagram

shields preferably insulated and grounded at one end only. Low level audio wiring should be kept away from AC power and signal light circuits. Connect a ground to the heavy bus wire adjacent to the audio terminal block.

Microphone and Turntable

Connect microphone and turntable according to the table of connections on 5TB1. All microphones installed in the same studio should be phased alike. The input transformers (5T1, 5T2, 5T3) are connected for a balanced 150-ohm input. If a 600-ohm input is desired, reconnect by removing jumper between terminals 1 and 3 and 4 and 6; jumper terminals 3 and 4. Remove ground connection from terminal 5 and connect to terminal 4.

If a 37.5 ohm input is desired, remove the jumpers between terminals 1 and 3, and 4 and 6 and jumper 1 and 5, and 2 and 6. A center tap is not available for this impedance.

Remote Line and Network Inputs

A 600/600 ohm pad 5AT11 having a loss of 30 db is inserted ahead of the input transformer 5T4. This pad may be modified or removed if so desired. The input transformer 5T4 is connected for 600-ohm input. If desired it may be reconnected for 150 ohms by removing wire connected to terminal 1 and connecting it to terminal 2, and removing wire connected to terminal 6 and connecting it to terminal 5.

Line Equalizer

An Equalizer, such as the RCA BE-2A, MI-11752, for compensating the frequency response of the Remote and Network Lines may be connected to terminals 25 and 26.

Program Line

The program output line is connected to terminals 53 and 54. A 6 db isolation pad 5AT12 having the impedance of 600 ohms is provided within the consolette.

Output To External Monitor Amplifier

An external monitor may be connected to a built-in pad 5AT13 having an output impedance of 600 ohms by making connections to terminals 55 and 56.

External Input To Monitor Amplifier

The 600-ohm impedance output of an off-air tuner may be connected to terminals 31 and 32 for off-air monitoring of program.

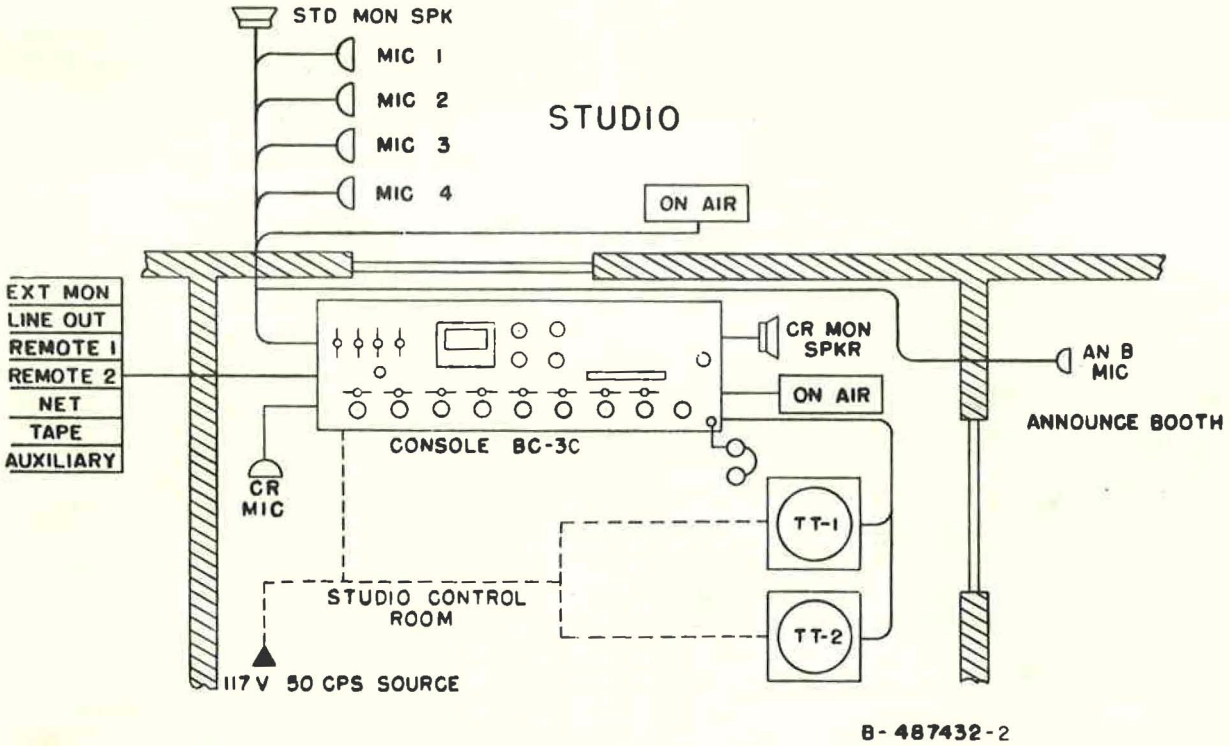

Figure 17—Typical Installation for One Studio

CONNECTIONS AT TERMINAL BLOCK 5TB1

Control Room Microphone	1-2
Studio Microphone 1	3-4
Announce Booth Microphone	5-6
Studio Microphone 2	7-8
Studio Microphone 3	9-10
Studio Microphone 4	11-12
Turntable 1	13-14
Turntable 2	15-16
Tape	17-18
Auxiliary TAPE	19-20
~~Remote Line~~ 1 } —CARTS	21-22
~~Remote Line~~ 2 } TO TAPE IN	23-24
Line Equalizer IN	25-26
~~Network~~ ~~CART~~ 82	27-28
Line Equalizer OUT	29-30
External Monitor Input AIR	31-32
Program Mixing Bus	33-34
No Connection	35-36
Program Booster Amplifier Input	37-38
No Connection	39-40
Audition Mixing Bus	41-42
~~Turntable~~ Cue Output (BRIDGE)	43-44
Audition Monitor Input	45-46
Cue Monitor Input	47-48
Not used TO CART IN	49-50
Not used (Sr. 8 SPKRS) TO AUX. TAPE IN	51-52
Program Line	53-54
External Monitor Output	55-56
Monitor Output 8 ohm	57-58
Monitor Output 600 ohm	59-60
Not used	61-62
Remote Line Cue Feed	63-64
Control Room Speaker	65-66
Studio Speaker	67-68
Control Circuit	69-70
Control Circuit	71-72
Relay Supply 24 V	73-74
Not used	75-76
Control Room Warning Light	77-78
Studio Warning Light	79-80

CART IN

AMPEX IN

CASSETTE DECK

Loudspeaker Connections

The control room speaker is connected to terminals 65 and 66 and the studio speaker to terminals 67 and 68. The loudspeaker should have a voice coil impedance of 15-16 ohms. For other voice coil impedances, a matching transformer is suggested. It is also possible to use speakers having a voice coil impedance of 6-8 ohms by replacing the 15-ohm load resistors 5R40 and 5R41 with 6-8 ohms, 5 w resistors. Reconnect the wire leading to terminal 10 of the monitor output transformer 5T8 to terminal 9.

Mounting facilities are provided for two additional speaker muting relays (accessory item MI-11748).

Warning Lights

Studio warning lights MI-11706 Series may be operated from the speaker muting relays. It is advisable to use a MI-11702-A Warning Light Relay with each warning light. The Control Room signal light circuit connects to terminals 77 and 78, the studio circuit to 79 and 80.

Hum Adjustment

Before placing the consolette in operation, make the following adjustment:

1. Set the input selector switches 5S1 to 5S3 to the center OFF position. Make sure that the other inputs are terminated in a resistance.

2. Set the mixer output switches 5S5 to 5S7 to program position P.

RELAY, SPEAKER AND WARNING LIGHT OPERATION

INPUT SELECTORS	*MIXERS*				*LOUDSPKRS.*		*LIGHTS*		*SPK. RELAYS*	
	5S5	*5S6*	*5S7*	*5S8*	*CR*	*STD*	*CR*	*STD*	*CR*	*STD*
5S1 OFF	O				ON	ON	OFF	OFF	OPEN	OPEN
5S1 CR MIC	P				OFF	ON	ON	OFF	CLOSED	OPEN
5S1 MIC 1	P				ON	OFF	OFF	ON	OPEN	CLOSED
5S2 TT1		P			ON	ON	OFF	OFF	OPEN	OPEN
5S2 MIC 2		P			ON	OFF	OFF	ON	OPEN	CLOSED
5S3 TT2			P		ON	ON	OFF	OFF	OPEN	OPEN
5S3 MIC 3			P		ON	OFF	OFF	ON	OPEN	CLOSED
5S4 REM				P	ON	ON	OFF	OFF	OPEN	OPEN
5S4 NET				P	ON	ON	OFF	OFF	OPEN	OPEN
5S1 CR MIC	A				OFF	ON	ON	OFF	CLOSED	OPEN
5S1 MIC 1	A				ON	OFF	OFF	ON	OPEN	CLOSED
5S2 TT1		A			ON	ON	OFF	OFF	OPEN	OPEN
5S2 MIC 2		A			ON	OFF	OFF	ON	OPEN	CLOSED
5S3 TT2			A		ON	ON	OFF	OFF	OPEN	OPEN
5S3 MIC 3			A		ON	OFF	OFF	ON	OPEN	CLOSED
5S4 REM				A	ON	ON	OFF	OFF	OPEN	OPEN
5S4 NET				A	ON	ON	OFF	OFF	OPEN	OPEN

3. Set mixers 5AT1 and 5AT3 and master attenuator 5AT9 to maximum clockwise position. Set mixers 5AT4 to 5AT8 to maximum counterclockwise position.
4. Adjust the hum control 4R9 on the power supply chassis for minimum hum in the output to the program line.

Control Circuit Modification

If the Announce Booth microphone input is to be used as a studio microphone, jumper terminals 70, 71 and 72 on terminal block 5TB1.

VU Meter Attenuator

The VU meter attenuator is designed to give a meter reading of 0 on the VU scale with an output of 8 dbm delivered to a 600-ohm load connected to the program output terminals. If it is desired to have the meter read 0 at another output level, replace resistors 5R31, 5R32, and 5R33 with the values contained in the table shown below:

Output Level (DBM)	*5R31 ohms*	*5R32 ohms*	*5R33 ohms*
–2	3600	0	omit
0	4047	447	16790
2	4482	883	8180
4	4896	1296	5220
6	5279	1679	3690
8	5626	2026	2741
10	5934	2334	2091
12	6203	2603	1621
14	6433	2833	1268

OPERATION

The front panel, figure 18, and the chart *Control Functions* supply complete identification and function of all controls and switches on the control panel. It is advisable to be familiar with this information for thorough understanding of the flexibility of the equipment.

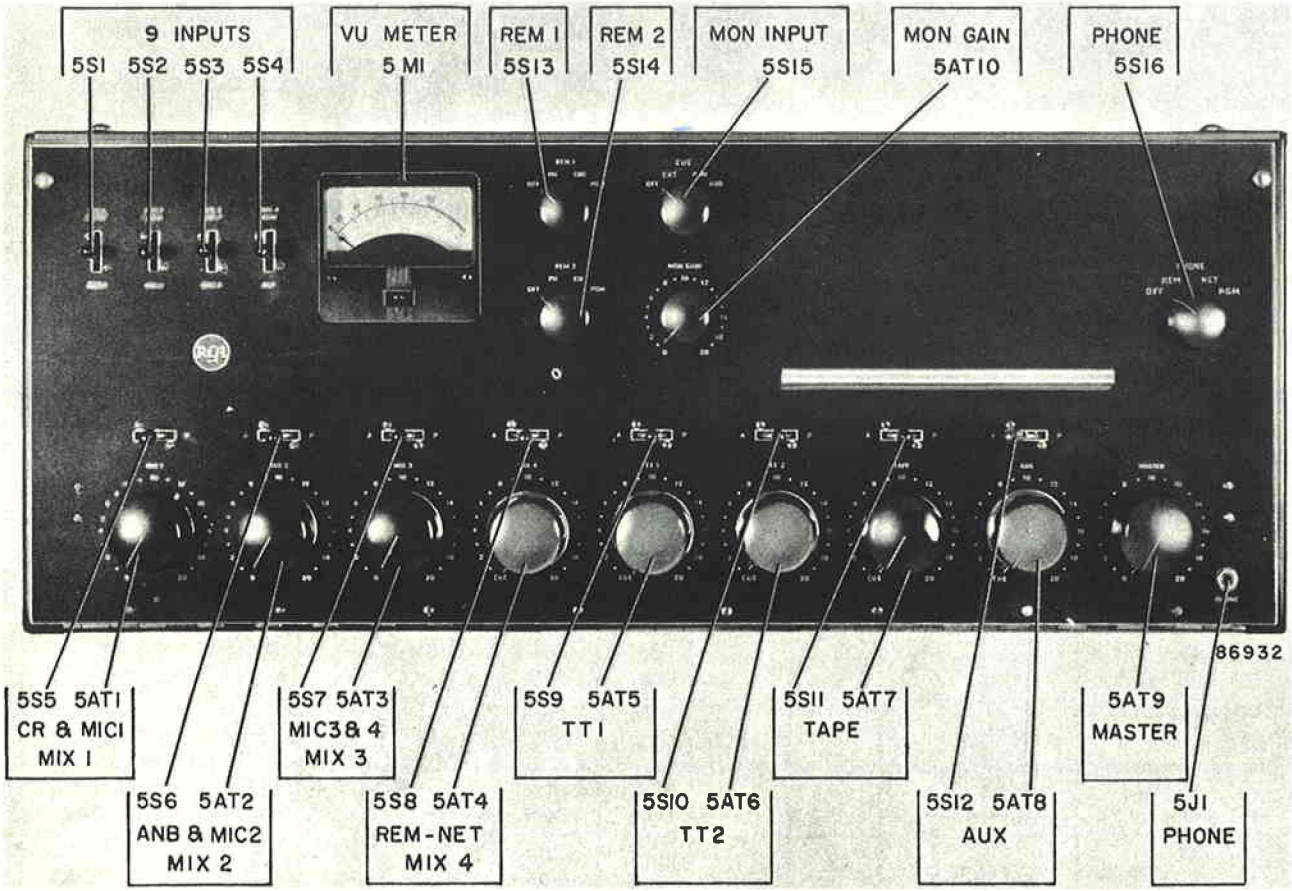

Figure 18—Control Panel

CONTROL FUNCTIONS

Panel Designation	*Symbol*	*Knob Color*	*Function*	*Coordinated with*
INPUT SELECTOR SWITCHES				
CR MIC MIC 1	5S1	Black	Selects control room or studio microphone 1	5AT1, 5S5
AN B MIC 2	5S2	Black	Selects announce booth or studio microphone 2	5AT2, 5S6
MIC 3 MIC 4	5S3	Black	Selects MIC 3 or MIC 4 in studio	5AT3, 5S7
REM	5S4	Red	Selects remote program thru REM 1, REM 2	5AT4, 5S8
NET			Selects network program	5S13, 5S14
MIXER ATTENUATORS				
			Controls gain of:	
MIX 1	5AT1	Black	CR MIC or MIC 1	5S1, 5S5
MIX 2	5AT2	Black	MIC 2 or AN B MIC	5S2, 5S6
MIX 3	5AT3	Black	MIC 3 or MIC 4	5S3, 5S7
MIX 4	5AT4	Red	REM or NET lines } In maximum counterclockwise position output of mixers is connected to CUE position of monitor input selector switch 5S15	5S4, 5S8
TT 1	5AT5	Blue	TT 1	5S9
TT 2	5AT6	Blue	TT 2	5S10
TAPE	5AT7	Black	TAPE	5S11
AUX	5AT8	Green	Auxiliary Input	5S12
MIXER SWITCHES				
A—P	5S5	Black	When in position P, connects the mixer control to the program channel	5S1, 5AT1
A—P	5S6	Black		5S2, 5AT2
A—P	5S7	Black		5S3, 5AT3
A—P	5S8	Red		5S4, 5AT4
A—P	5S9	Blue		5AT5
A—P	5S10	Blue	When in position A, connects the mixer control to the audition channel	5AT6
A—P	5S11	Black		5AT7
A—P	5S12	Green		5AT8
REMOTE LINE SELECTOR SWITCHES				
REM 1	5S13	Black	Selects remote line #1 for headphone, cue and program	5S4, 5S8 5AT4
REM 2	5S14	Black	Selects remote line #2 for headphone, cue and program	5J2
MASTER GAIN CONTROL				
MASTER	5AT9	Black	Controls gain of program channel	
MONITOR INPUT SELECTOR SWITCH				
MON INPUT	5S15	Black	Selects input of monitor amplifier, position OFF—EXT—CUE—PGM—AUD	5AT10
MONITOR GAIN CONTROL				
MON GAIN	5AT10	Black	Adjusts level required for speakers, positions 0-20	5S15
PHONE SELECTOR SWITCH				
PHONE	5S16	Black	Selects source for headphones; has 4 positions OFF—REM—NET—PGM	5J1

Routine Procedure

1. Select the input desired.

2. Move corresponding A-P mixer switch to the desired function, Audition or Program.

3. Turn corresponding mixer attenuator up.

4. Turn MASTER control to level desired. (Adjust MASTER and MIXER controls to approximately the same setting.)

5. Check level on the VU meter; the meter pointer should not swing over the red line on the VU scale.

6. Monitor the selected input by turning MON INPUT to selected function. The NET and REM inputs and the PGM output may be monitored through headphones plugged into the PHONE jack 5J1 with the PHONE selector switch 5S 16 turned to the selected function.

7. Program may be monitored from an off-air tuner by turning the MON INPUT switch 5S15 to EXT. With the MON GAIN control 5AT10 adjust the volume of the loudspeakers as required.

To put a local program on the air

1. Select the microphone inputs desired on 5S1, 5S2, 5S3.

2. Move corresponding Mixer Switches as required to P position.

3. Turn MON INPUT switch 5S15 to PGM.

4. Turn up MIX 1, MIX 2, MIX 3, as required, and adjust to obtain desired balance of output from the microphones.

5. Adjust MASTER gain control 5AT9 to the desired level on the VU meter.

6. The program may be monitored over headphones or both loudspeakers except that the Control Room speaker is muted when the CR microphone is in use and the Studio Speaker is muted when a studio microphone is in use. With the MON GAIN control 5AT10, adjust the volume of the loudspeakers as required.

To audition a program

1. Select the inputs desired 5S1, 5S2, 5S3 or all three.

2. Move corresponding mixer switches to A.

3. Turn up corresponding MIX 1, 2, 3.

4. Set the Monitor Input Selector with 5S15 to AUD.

5. The audition may be heard as when monitoring a program.

To put network program on the air

1. Move the key switch 5S4 to NET.

2. Move Mixer Switch 5S8 to P.

3. Turn MON INPUT switch 5S15 to PGM.

4. Turn up MIX 4.

5. Adjust MASTER gain control to desired level.

6. Network program may be heard over both loudspeakers. With the MON GAIN control adjust the volume of the loudspeakers as required.

To audition a network program

1. Move key switch 5S4 to NET.

2. Move mixer switch 5S8 to A.

3. Turn MON INPUT switch 5S15 to AUD.

4. Turn up MIX 4.

5. Network audition may be heard over both loudspeakers. With MON GAIN control, adjust the volume of the loudspeakers as required.

To monitor a network program

Plug the headphones into the PHONE jack to monitor the program as received from the network, with the PHONE selector switch in NET position.

To put a remote program on the air

1. Switch REM 1, 5S13 (or REM 2, 5S14) is normally at CUE position before remote operation. Then turn switch corresponding to the desired line to PGM to put program on the air.

2. Move the key switch 5S4 to REM position.

3. Move the corresponding mixer switch 5S8 to P.

4. Turn MIX 4 up and adjust MASTER gain control to desired level.

5. Turn MON INPUT switch 5S15 to PGM.

6. With the MON GAIN control, adjust the volume of the loudspeakers as required.

To audition a remote program

1. Select a remote program according to the above procedure except the mixer switch 5S8 is moved to A or the audition position.

2. Turn the MON INPUT switch 5S15 to AUD.

3. With the MON GAIN control, adjust the volume of the loudspeakers as required.

Turntable, Tape and Auxiliary Inputs

These inputs are used for programming and auditioning in exactly the same manner as the microphone and network-remote inputs except that no input selector switch is used. To cue set the MON INPUT

selector switch 5S15 to the CUE position and turn the mixer control, associated with the input to be cued to the maximum counterclockwise position past the detented off position.

Talkback to Studio

1. Set the input selector switch 5S1 to CR MIC.

2. Set the mixer switch 5S5 to A position.

3. Set the MONITOR INPUT selector switch 5S15 to AUD.

4. Turn up the mixer gain control 5AT1 and adjust the monitor gain control 5AT10 to desired level.

For the talkback to be heard in the studio, the studio microphone input selector switches or the associated mixer output switches must not be in an ON position.

Remote Talkback (REM 1 or REM 2)

1. Set the MIX 1 key switch 5S1 to CR MIC.

2. Move corresponding mixer switch (5S5) to A and turn up MIX 1.

3. Turn MON INPUT switch 5S15 to AUD position.

4. Turn REM 1 switch 5S13(or REM 2, 5S14) to CUE position. The operator in the control room can now talk to the "remote" operator.

5. Plug headphones into the PHONE jack 5J1, set the PHONE switch to REM and turn REM 1 (or REM 2) to PH position. The control room operator can now listen to the "remote" operator. By switching the remote line switch (REM 1, 5S13 or REM 2, 5S14) between the CUE and PH positions, the console operator has a two way communication system with the remote operator. This remote talkback may be operated while a program from another source is on the air.

To Feed Cue to Remote Line (REM 1, REM 2)

Turn switch REM 1 (5S13) or REM 2 (5S14) to the CUE position. Cue will be automatically fed over the remote line from the monitor output.

To Cue Mixer 5AT4 to 5AT8 Inputs

The turntable, network-remote, tape and auxiliary mixer attenuators, 5AT4 to 5AT8, are equipped with "cue" switches which in the maximum counterclockwise position connect the output of the turntables to the CUE position on the monitor input selector switch 5S15. It is also possible to connect to an external cue amplifier (see Installation).

Remote Line Selector Switches 5S13 and 5S14

Switch 5S13 controls remote line 1; switch 5S14 controls remote line 2.

The function of these four-position switches is to—

1. Disconnect the remote line (OFF).

2. Connect the remote line to the PHONE jack 5J1 (PH).

3. Connect the remote line to the output of the monitor amplifier (through a pad for sending cue (CUE).

4. Connect the remote line to the network-remote line input channel (through 5S4, 5AT4 and 5S8) (PGM).

PHONE Monitoring

Plug the headphones into the PHONE jack on the front panel. Select the desired output by the PHONE selector switch which has four positions, OFF-REM-NET-PGM. The outgoing program may be monitored by setting the control the PGM position; the remote or network inputs may be monitored by setting the control to the REM or NET positions, respectively. This permits convenient cuing when shifting from a live show to a remote or network or vice versa.

MAINTENANCE

The BC-3C Standard Consolette may be easily serviced without disturbing the installation. The top cover which can be easily removed is fastened to the consolette by four Camloc fasteners. The front panel is hinged at the bottom and secured at the top by two Camloc fasteners. The front panel is held in the open position by two fall supports.

Tubes

The tubes of the amplifiers and power supply should be checked periodically either in a tube tester or by measuring the socket voltages. Refer to the Tube Socket Voltage chart. The values shown are measured with a voltmeter having a resistance of 20,000 ohms-per-volt. Slight variations may be due to component tolerances.

Fuse

A power fuse is located at the right front of the preamplifier mounting shelf. This fuse should be replaced only with a type 3AG, 3 amp time lag fuse.

Care of Variable Attenuators

To remove the attenuator cover, press the latch under the cover and remove it by twisting the cover counterclockwise. Apply Davenoil to the contacts and rotate the knob several times. Wipe the contacts clean using a soft cloth and apply a thin film of Davenoil. Replace attenuator cover. A bottle of Davenoil is packed with the consolette.

Care of Switches, Relays and Sockets

The switches and relay contacts do not require periodic maintenance and should not be tampered with. Contacts of the tube sockets are cleaned best by pulling tubes in and out of the socket several times.

Replacement of Input and Line Transformers 5T1 to 5T6

To gain access to the input and line transformers, the preamplifier mounting shelf must be loosened. Remove the top cover and open the front panel if desirable. Remove the four screws and hardware located at either end of the mounting shelf. Refer to figure 22. Lift the shelf up from the front and tilt it backwards to expose the transformers.

Replacement of Output Transformers 5T7 and 5T8 and Attenuators 5AT12 and 5AT13

To gain access to the terminals and mounting hardware of the output transformers and pads 5AT12 and 5AT13, the mounting shelf of the program and monitor circuit boards must be tilted up. Remove the four screws from each corner. No leads need to be removed from the circuit boards to service these assemblies.

Power Supply 5PS1

The power supply chassis is secured to the consolette cabinet by the four screws, one in each corner. To gain access to the components and wiring underneath the chassis, remove the screws and carefully turn the power supply upside down. The interconnecting leads are long enough to permit this change in position without disconnecting them. Make sure that the power is turned off when attempting to service the power supplies.

Servicing of the Etched Wiring Board Assemblies

The etched wiring boards are made of .062 inch thick paper base phenolic laminate to one side of which is bonded a thin sheet of copper. The conductor pattern is formed by an etching process. Component leads are threaded through holes which are punched into the board. The ends of the leads extending through the board are bent over against the copper conductors. The complete assembly is subsequently dip-soldered.

Components may be replaced easily by following

TUBE SOCKET VOLTAGES

Tube Socket	*1*	*2*	*3*	*4*	*5*	*6*	*7*	*8*	*9*
PRE-AMPLIFIER (5AR1-5AR5)									
1XV1	195-239	0	4.2-5.0	*	*	112-138	0	1.4-1.8	**
1XV2	175-205	0	4.2-6.0	*	*	285	—	75-93	**
PROGRAM AMPLIFIER (5AR6)									
2XV1	130-150	0	1.15-1.40	*	*	180-210	—	55-65	**
2XV2	280	0	10-12	*	*	280	0	10-12	**
2XV3	280	0	10-12	*	*	280	0	10-12	**
MONITOR AMPLIFIER (5AR7)									
3XV1	125-145	0	1.10-1.30	*	*	225-250	—	38-48	**
3XV2	—	*	285-290	290	—	—	**	15-18	—
3XV3	—	*	285-290	290	—	—	**	15-18	—
POWER SUPPLY (5PSI)									
4XV1	—	380***	—	365 AC	—	365 AC	—	380***	—

5 VAC between points marked ***.

6.3 VAC between terminals marked * and **.

these simple instructions. Care should be observed not to break or crack the board by undue stress or to damage the bonding adhesive by applying too much heat during soldering.

1. Tools Required

1. A small (35 watt or less) pencil type soldering iron.
2. A pair of small diagonal cutters.
3. A pair of small long nose pliers.
4. A scribe or pick.
5. A small knife.

2. Emergency Repairs

If it is known which component is defective, it may be replaced without removing the board from its mounting.

a. In the case of a small component, such as a ½ or 1 watt resistor, cut the component in half using diagonal pliers. Crush the body by means of the long nose pliers. This is done to obtain extra lead length. In the case of larger components, clip the leads as close as possible to the component body.

b. Using long nose pliers, form a loop of the lead ends as shown in figure 19.

c. Thread the leads of the new components through these loops. Cut off the excess lead, crimp and solder the connection.

3. Permanent Repairs

a. Remove the hardware fastening the board to the chassis and tilt the board up.

b. Isolate the defective component. If it is neccessary to disconnect a component from the circuit for test, heat the junction of the component lead and the etched wiring with the soldering iron. The heat should be concentrated on the component lead rather than the etched wiring pattern. Pry up and straighten the bent-over portion of the component lead with a knife blade, then pull lead through the hole with pliers.

c. To remove the defective component, snip the leads off at the component side of the board, see figure 19.

d. Using a small soldering iron (35 watts or less) heat the leads and remove them from the printed wiring side of the board. Be careful not to apply too much heat or force to avoid damage to the thin copper conductors.

e. Clean and preform the leads of the new component and insert through the holes until the component body is tight against the board.

f. On the circuit side, grasp the component lead and bend it over in the direction of the circuit pattern.

g. Crimp the wire tightly against the board (see figure 19), and cut off the excess component lead. Leave about 1/16 inch of wire protruding from the edge of the hole.

h. Heat the lead and apply rosin core solder. DO NOT USE PASTE OR ACID FLUX. Remove excess rosin from the joints with alcohol.

i. Replace the circuit board, using the original hardware.

4. Replacement of Tube Socket

Heat each socket terminal and pry up and straighten with knife blade. Pull socket out applying heat to terminal leads, if necessary. Clean holes free of solder. Prepare new socket for installation as follows: If a tube shield ground strap (stock #210773) is required, insert strap from top of socket in slot provided until firmly seated. Small ridges on strap

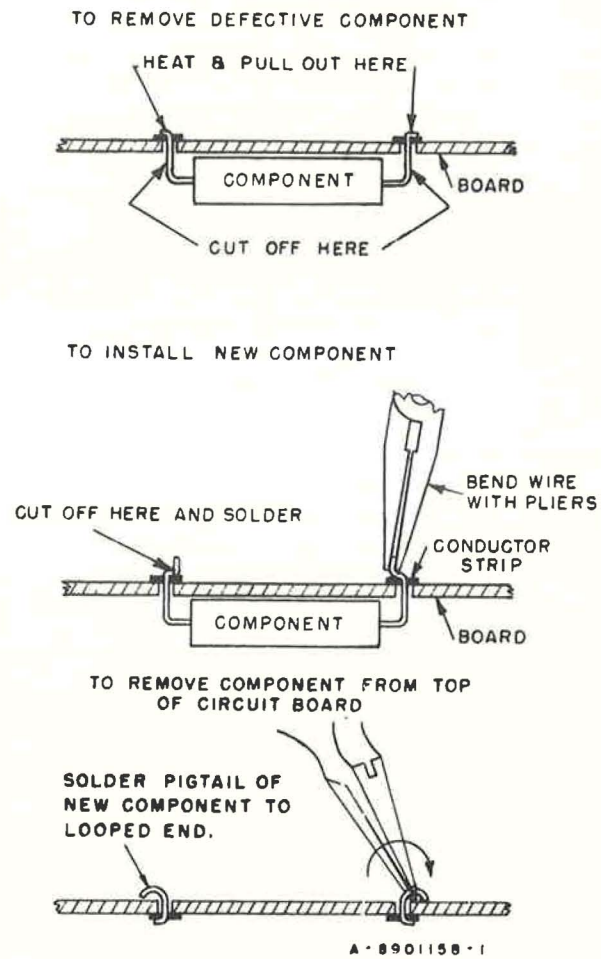

Figure 19—Replacement of Components in Printed Circuits

must point outward. Bend lead terminal of strap radially outward.

Using the old socket as a guide, bend terminal leads at right angles to fit mounting holes provided in board. Insert socket terminals through holes making sure that socket terminal numbers correspond to the numbers etched on the board near the tube socket mounting holes. Bend socket terminals radially inward. If necessary, clip off excess length to prevent short circuit with adjacent conductors. Solder terminals to the etched wiring.

LIST OF PARTS

Symbol No.	*Description*	*Stock No.*
5AR1 to 5AR3	Pre-Amplifier: circuit board assembly, complete with 6 capacitors, 13 resistors, 2 tube sockets, and 2 ground straps (components listed under Pre-Amplifiers)	215366
5AR4, 5AR5	Pre-Amplifier: circuit board assembly, complete with 5 capacitors, 13 resistors, 2 tube sockets, and 2 ground straps (components listed under Pre-Amplifiers)	215366
5AR6	Program Amplifier: circuit board assembly, complete with 6 capacitors, 12 resistors, and 3 tube sockets (components listed under Program Amplifiers)	211000
5AR7	Monitor Amplifier: circuit board assembly, complete with 7 capacitors, 13 resistors, 3 tube sockets (components listed under Monitor Amplifiers)	211001
5AT1 to 5AT3	Resistor: variable, attenuator, 100,000 ohms, 20 steps, 2 DB per step, last step tappered to infinity	211002
5AT4 to 5AT8	Resistor: variable attenuator, 150/300 ohms, ladder pad, 20 steps, 2 DB per step, last step tappered to infinity, with cue switch	94136
5AT9	Resistor: variable, attenuator, 100,000 ohms, 20 steps, 2 DB per step, last step tappered to infinity.	211002
5AT10	Resistor: variable, composition, 100,000 ohms, ±10%, 2 w.	209286
5AT11	Fixed Pad: (parts listed under Fixed Pads)	
5AT12	Fixed Pad: (parts listed under Fixed Pads)	
5AT13	Fixed Pad: (parts listed under Fixed Pads)	
5C1, 5C2	Capacitor: fixed, paper, 0.47 mf., ±20%, 400 v.	
5C3	Capacitor: fixed, paper, 0.033 mf., ±10%, 400 v.	
5C4	Capacitor: fixed, mica, 330 mmf., ±10%, 500 v.	79191
5F1	Fuse: 3 amp., 125 v., slo-blo	99164
5J1, 5J2	Jack: open circuit	53401
5K1, 5K2	Relay: DPDT	205255
5M1	Meter: VU	205249

Symbol No.	*Description*	*Stock No.*
5R1 to 5R3	Resistor: fixed, composition, 150 ohms, ±10%, ½ w.	
5R4, 5R5	Resistor: fixed, composition, 4700 ohms, ±10%, ½ w.	
5R6	Resistor: fixed, composition, 560 ohms, ±10%, ½ w.	
5R7 to 5R11	Resistor: fixed, composition, 100 ohms, ±5%, ½ w.	
5R12 to 5R17	Resistor: fixed, composition, 24,000 ohms, ±5%, ½ w.	
5R18 to 5R28	Resistor: fixed, composition, 390 ohms, ±5%, ½ w.	
5R29	Resistor: fixed, composition, 18,000 ohms, ±5%, ½ w.	
5R30	Resistor: fixed, composition, 6200 ohms, ±5%, ½ w.	
5R31	Resistor: fixed, composition, 5600 ohms, ±5%, ½ w.	
5R32	Resistor: fixed, composition, 2000 ohms, ±5%, ½ w.	
5R33	Resistor: fixed, composition, 2700 ohms, ±5%, ½ w.	
5R34, 5R35	Resistor: fixed composition, 100,000 ohms, ±5%, ½ w.	
5R36, 5R37	Resistor: fixed, composition, 100 ohms, ±5%, ½ w.	
5R38	Resistor: fixed, composition, 560 ohms, ±10%, ½ w.	
5R39	Resistor: fixed, composition, 27,000 ohms, ±5%, ½ w.	
5R40, 5R41	Resistor: fixed, wire wound, 15 ohms, ±10%, 5 w.	97441
5R42 to 5R45	Resistor: fixed, composition, 180 ohms, ±5%, ½ w.	
5R46, 5R47	Resistor: fixed, composition, 1500 ohms, ±5%, 1 w.	
5R48	Resistor: fixed, composition, 820 ohms, ±5%, ½ w.	
5R49	Resistor: fixed, composition, 680 ohms, ±10%, ½ w.	
5R50	Resistor: fixed, composition, 560 ohms, ±5%, ½ w.	
5R51	Resistor: fixed, composition, 560 ohms, ±10%, ½	
5R52	Resistor: fixed, composition, 47,000 ohms, ±5%, ½ w.	
5R53	Resistor: fixed, composition, 390 ohms, ±5%, ½ w. Same as 5R18	
5R54 to 5R58	Resistor: fixed, composition, 16,000 ohms, ±5%, ½ w.	

Symbol No.	Description	Stock No.
5S1 to 5S4	Switch: key lever, 2 "A" and 4 "D" type contacts, 2 way locking	211019
5S5 to 5S7	Switch: key lever, 2 "A" and 2 "D" type contacts, 2 way locking	211020
5S8	Switch: key, 2 locking with center off position, contacts A & C-1D, rated 3 amp., 150 w., less handle	94142
5S9 to 5S12	Switch: key lever, 2 "D" type contacts, 2 way locking	94142
5S13, 5S14	Switch: rotary, wafer type, 2 circuits, 1 section, 4 position, non-shorting contacts	211021
5S15	Switch: rotary, wafer type, 1 section, 5 position	215367
5S16	Switch: rotary, wafer type, 2 circuit, 1 section, 4 position, non-shorting contacts. Same as 5S13	211021
5SP1	Power Supply	
5T1 to 5T3	Transformer: audio input	205326
5T4	Transformer: audio line	MI-11713
5T5, 5T6	Transformer: audio input.	205326
5T7	Transformer: audio output	209281
5T8	Transformer: audio output	207434
5XF1	Holder: fuse	205914
	MISCELLANEOUS	
	Board: terminal, 80 terminals	211032
	Clamp: cable, white nylon, 3/8" ID	210391
	Clamp: cable, white nylon, 1/4" ID	211034
	Clamp: cable, white nylon, 1/2" ID	213250
	Clamp: cable, white nylon, 5/8" ID	213251
	Fastener: stud, steel, with retaining ring	96145
	Fastener: receptacle, silicon bronze	94641
	Knob: control, black with white filled pointer, 2" dia.	17269
	Knob: control, black with white filled pointer, 1 7/16" dia.	215877
	Knob: control, blue with white filled pointer, 2" dia.	94444
	Knob: control, green with white filled pointer, 2" dia.	96928
	Knob: control, red with white filled pointer, 2" dia.	94446
	Knob: key lever switch, red	94441
	Knob: key lever switch, blue	94442
	Knob: key lever switch, green	96929
	Mounting: shock isolator	211029
	Oil: attenuator	20752
	Ring: retaining, fastener	98480
	Shield: tube, 53/64" ID x 1 3/8" ht., aluminum	211035
	Support: fall, single link, 6 1/4" lg., with 5 1/2" slot	94647
	PRE-AMPLIFIERS 5AR1-5AR5	
1C1	Capacitor: fixed, paper, 0.047 mf., ±10%, 400 v.	

Symbol No.	Description	Stock No.
1C2	Capacitor: fixed, paper, 0.1 mf., ±10%, 400 v.	
1C3	Capacitor: fixed, paper, 0.022 mf., 400 v.	
1C4	Capacitor: fixed, paper, 0.0047 mf., 600 v.	
1C5, 1C6	Capacitor: fixed, paper, 1.0 mf., 200 v.	
1R1	Resistor: fixed, composition, 8200 ohms, ±5%, 1 w.	
1R2	Resistor: fixed, composition, 100,000 ohms, ±10%, 1/2 w.	
1R3	Resistor: fixed, composition, 680,000 ohms, ±10% 1/2 w.	
1R4	Resistor: fixed, composition, 820 ohms, ±10%, 1/2 w.	
1R5	Resistor: fixed, composition, 330,000 ohms, ±5%, 1/2 w.	
1R6	Resistor: fixed, composition, 82,000 ohms, ±10%, 1/2 w.	
1R7	Resistor: fixed, composition, 16,000 ohms, ±5%, 1 w.	
1R8	Resistor: fixed, composition, 220,000 ohms, ±5%, 1/2 w.	
1R9	Resistor: fixed, composition, 680,000 ohms, ±10%, 1/2 w.	
1R10	Resistor: fixed, composition, 56,000 ohms, ±5%, 1/2 w.	
1R11	Resistor: fixed, composition, 2200 ohms, ±10%, 1/2 w.	
1R12, 1R13	Resistor: fixed, composition, 220,000 ohms, ±10%, 1/2 w. (1R13 used only in 5AR1, 2, 3)	
1R14	Resistor: fixed, composition, 3300 ohms, ±10%, 1/2 w.	
1XV1, 1XV2	Socket: tube, 9 contact miniature	209284
	Strap: ground, for miniature tube socket	210773
	PROGRAM AMPLIFIER 5AR6	
2C1	Capacitor: fixed, paper, 0.047 mf., ±10%, 400 v.	
2C2	Capacitor: fixed, mica, 39 mmf., ±10%, 500 v.	218099
2C3, 2C4	Capacitor: fixed, paper, 0.047 mf., ±10%, 400 v.	
2C5	Capacitor: electrolytic, 20 mf., +50 —10%, 450 v.	99149
2C6	Capacitor: fixed, paper, 0.047 mf., ±10%, 400 v.	
2R1	Resistor: fixed, composition, 100,000 ohms, ±10%, 1/2 w.	
2R2	Resistor: fixed, composition, 1800 ohms, ±5%, 1/2 w.	
2R3	Resistor: fixed, composition, 150,000, ohms, ±10%, 1/2 w.	

Symbol No.	Description	Stock No.
2R4	Resistor: fixed, composition, 680, 000 ohms, ±10%, 1/2 w.	
2R5	Resistor: fixed, composition, 2700 ohms, ±10%, 1/2 w.	
2R6, 2R7	Resistor: fixed, composition, 120, 000 ohms, ±5%, 1/2 w.	
2R8, 2R9	Resistor: fixed, composition, 470, 000 ohms, ±5%, 1/2 w.	
2R10	Resistor: fixed, composition, 390 ohms, ±5%, 1/2 w.	
2R11	Resistor: fixed, composition, 10, 000 ohms, ±10%, 1/2 w.	
2R12	Resistor: fixed, composition, 18, 000 ohms, ±5%, 1/2 w.	
XV1 to XV3	Socket: tube, 9 contact miniature	209284
MONITOR AMPLIFIER 5AR7		
3C1	Capacitor: fixed, paper, 0. 047 mf., ±10%, 400 v.	
3C2	Capacitor: fixed, mica, 82 mmf., ±10%, 500 v.	218221
3C3, 3C4	Capacitor: fixed, paper, 0. 047 mf., ±10%, 400 v.	
3C5	Capacitor: fixed, mica, 82 mmf., ±10%, 500 v.	218221
3C6	Capacitor: electrolytic, 25 mf., +250 −10%, 25 v.	59928
3C7	Capacitor: electrolytic, 20 mf., +50 −10%, 450 v.	99149
3R1	Resistor: fixed, composition, 100, 000 ohms, ±10%, 1/2 w.	
3R2	Resistor: fixed, composition, 2200 ohms, ±5%, 1/2 w.	
3R3	Resistor: fixed, composition, 220, 000 ohms, ±10%, 1/2 w.	
3R4	Resistor: fixed, composition, 1 meg., ±10%, 1/2 w.	
3R5	Resistor: fixed, composition, 1500 ohms, ±10%, 1/2 w.	
3R6, 3R7	Resistor: fixed, composition, 39, 000 ohms, ±5%, 1/2 w.	
3R8, 3R9	Resistor: fixed, composition, 470, 000 ohms, ±10%, 1/2 w.	
3R10, 3R11	Resistor: fixed, composition, 430 ohms, ±5%, 2 w.	
3R12	Resistor: fixed, composition, 6800 ohms, ±10%, 1/2 w.	
3R13	Resistor: fixed, composition, 22, 000 ohms, ±5%, 1/2 w.	
3XV1	Socket: tube, 9 contact miniature	209284
3XV2, 3XV3	Socket: tube, octal	207707
FIXED PADS 5AT11		
R1 to R4	Resistor: fixed, composition, 270 ohms, ±5%, 1 w.	
R5, R6	Resistor: fixed, composition, 18 ohms, ±5%, 1 w.	

Symbol No.	Description	Stock No.
	Board: circuit, etched with 6 terminals	211018
FIXED PADS 5AT12		
R1 to R4	Resistor: fixed, composition, 100 ohms, ±5%, 1 w.	
R5	Resistor: fixed, composition, 820 ohms, ±5%, 1 w.	
	Board: circuit, etched with 6 terminals	211018
FIXED PADS 5AT13		
R1, R2	Resistor: fixed, composition, 4700 ohms, ±5%, 1 w.	
R3	Resistor: fixed, composition, 620 ohms, ±5%, 1 w.	
	Board: circuit, etched with 6 terminals	211018
POWER SUPPLY 5PS1		
4C1A/C, 4C2A/C	Capacitor: electrolytic, 40/40/40 mf., +50 −10%, 450 v.	211022
4C3	Capacitor: fixed, paper, 0. 47 mf. ±10%, 200 v.	
4C4A/C to 4C6A/C	Capacitor: electrolytic, 40/40/40 mf., +50 −10%, 450 v.	211022
4C7	Capacitor: fixed, electrolytic, 1500 mf., 50 v.	98180
4CR1	Rectifier: selenium	215368
4R1A, B	Resistor: tapped, wire wound, 100/3000 ±10%, 7. 6/5. 4 w.	211024
4R2	Resistor: fixed, wire wound, 750 ohms, ±10%, 10 w.	211025
4R3	Resistor: fixed, composition, 120, 000 ohms, ±10%, 1 w.	
4R4	Resistor: fixed, composition, 18, 000 ohms, ±10%, 1 w.	
4R5A/D	Resistor: tapped wire wound, 1000/1000/1000/1000 ohms	215369
4R6	Resistor: fixed, composition, 6800 ohms, ±10%, 1 w.	
4R7	Resistor: fixed, composition, 10, 000 ohms, ±10%, 1 w.	
4R8	Resistor: fixed, composition, 22, 000 ±10%, 1 w.	
4R9	Resistor: variable, wire wound, 100 ohms, ±10%, 2 w.	45390
4R10	Resistor: fixed, composition, 10 ohms, ±10%, 1 w.	
4R11	Resistor: fixed, composition, 1200 ohms, ±10%, 2 w.	
4R12	Resistor: fixed, composition, 10, 000 ohms, ±10%, 1 w.	
4R13	Resistor: fixed, composition, 22, 000 ohms ±10%, 1 w.	
4T1	Transformer: power (115 v)	215370
4T1	Transformer: power (220 v)	235882
4XV1	Socket: tube, octal	68590

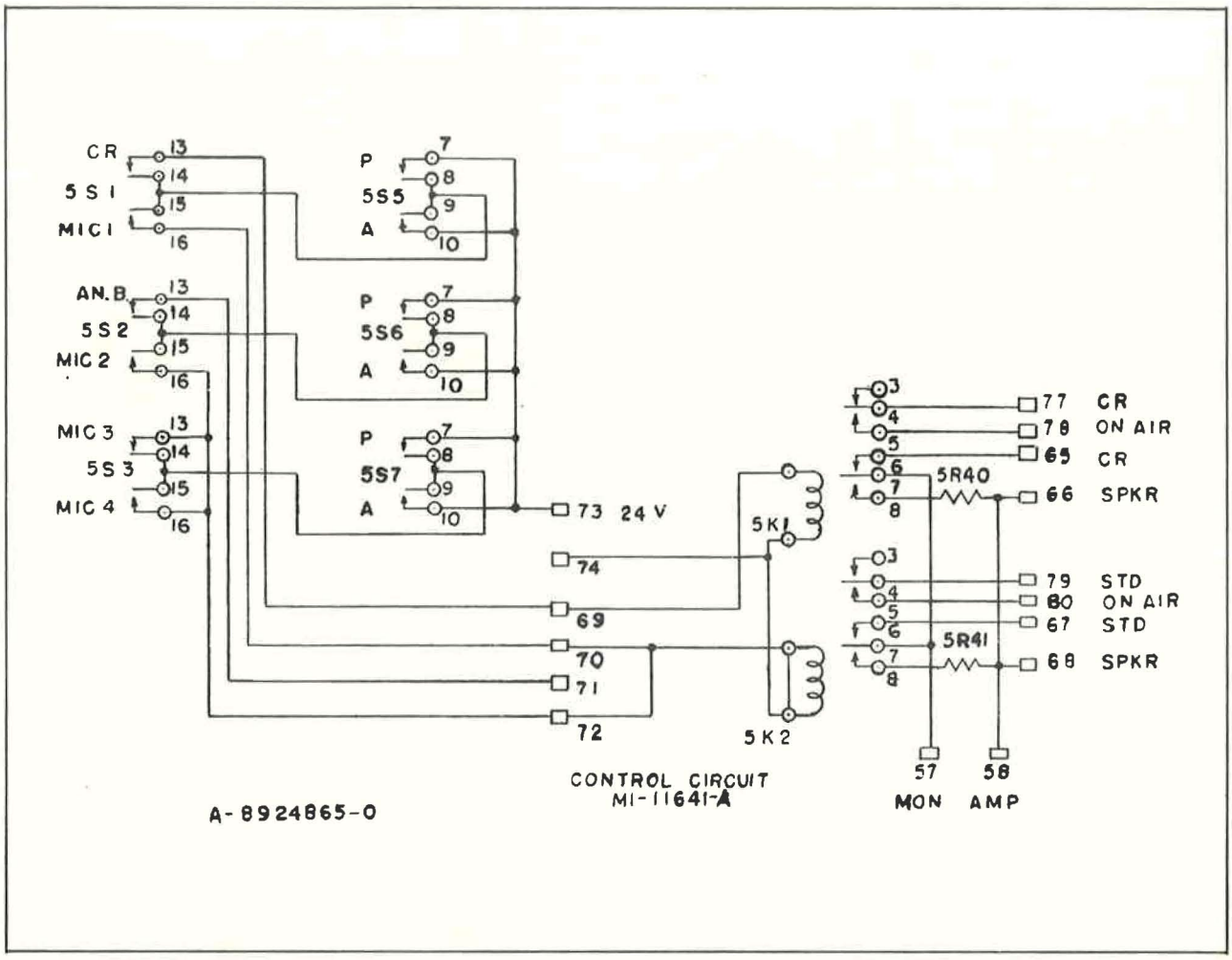

Figure 20—Control Circuits

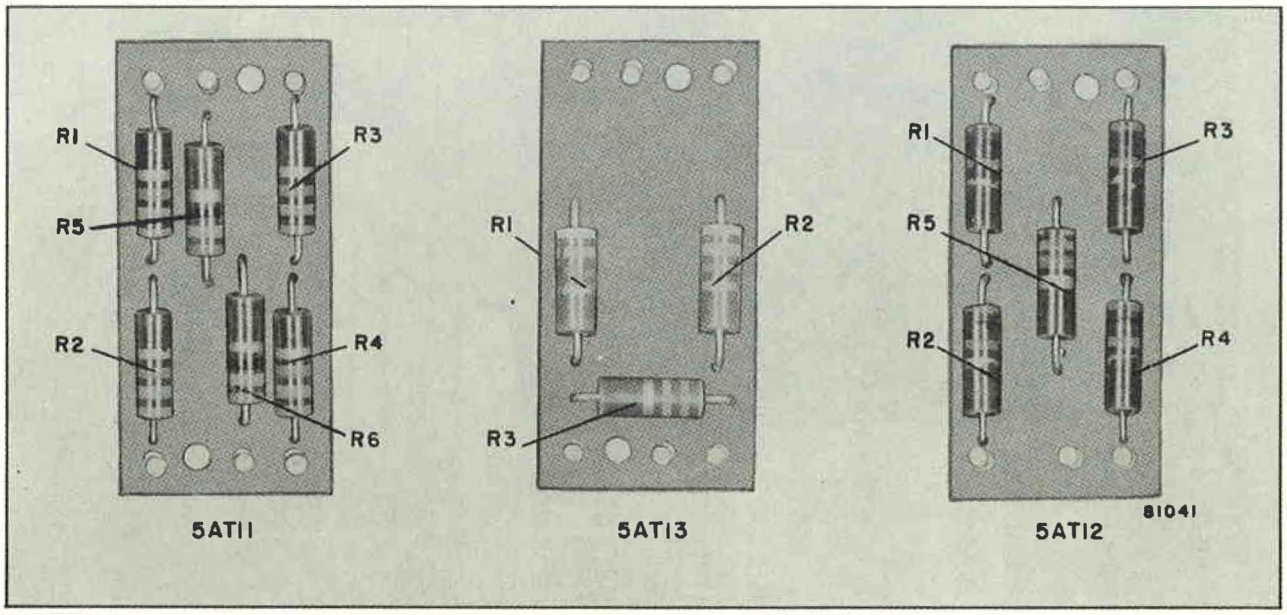

Figure 21—Fixed Pads 5AT11, 5AT13, 5AT12

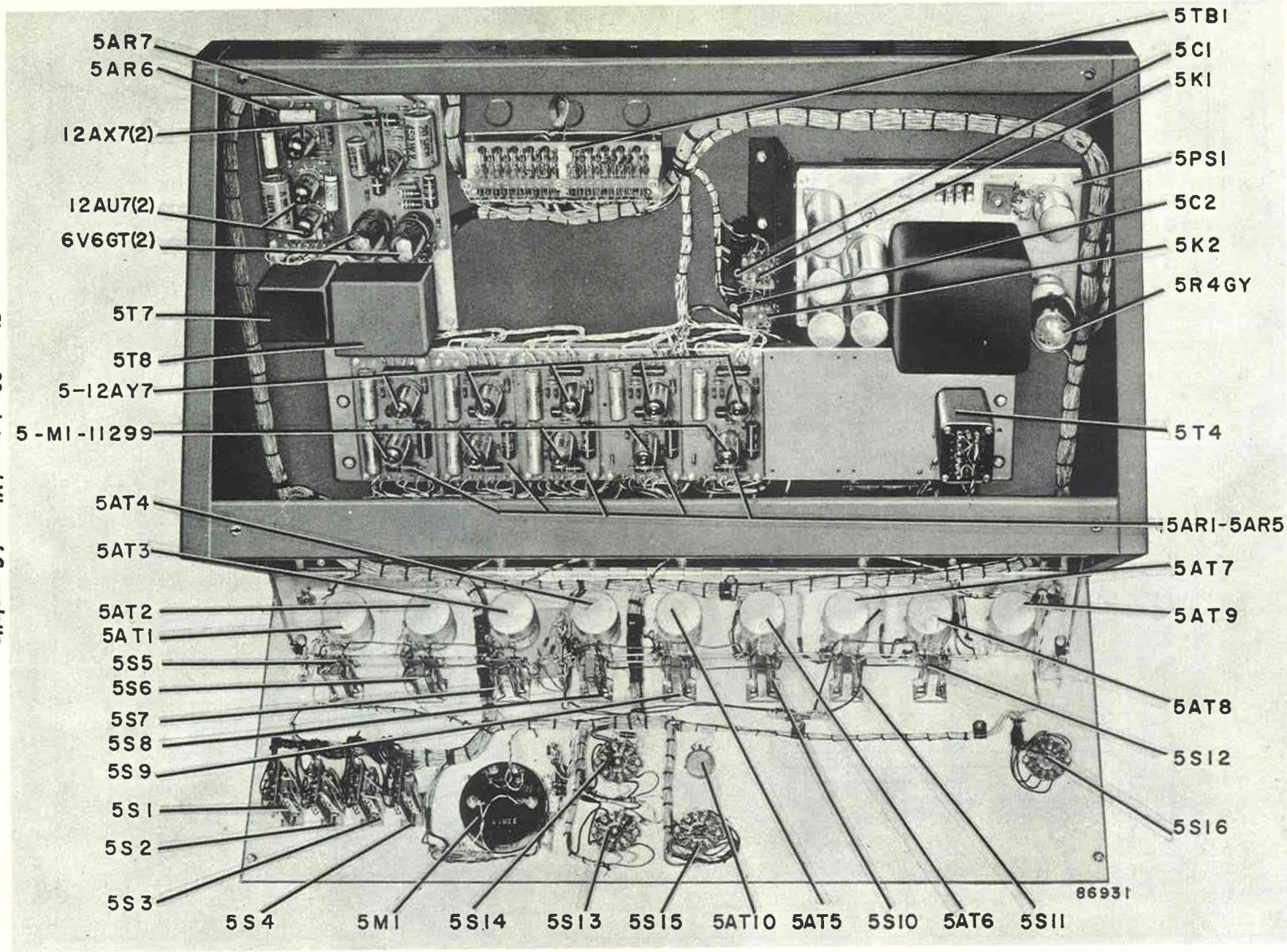

Figure 22—Internal View of Consolette

MON CONTROL REPLACED WITH 2.50K ATTAL

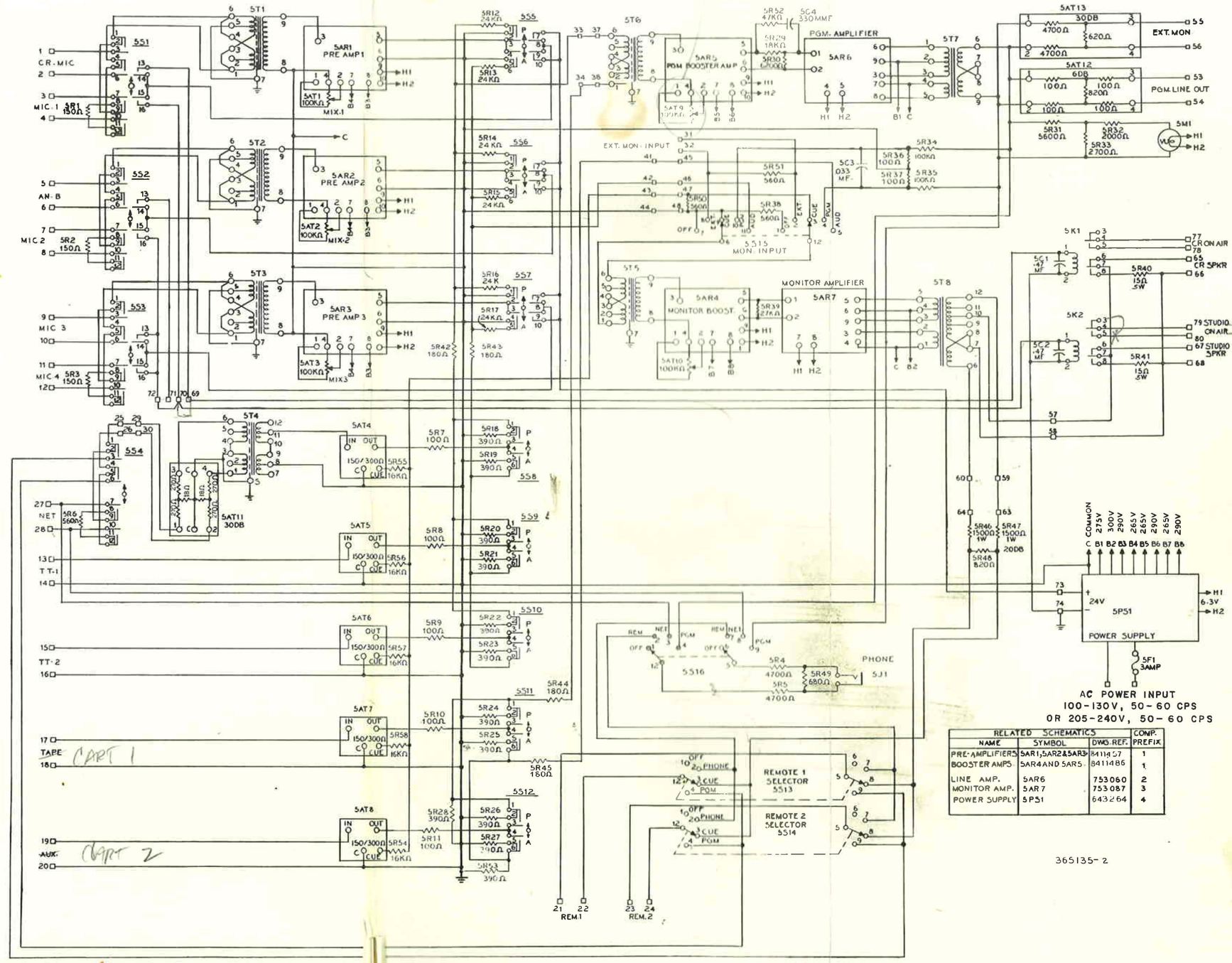

RELATED SCHEMATICS			
NAME	SYMBOL	DWG. REF.	COMP. PREFIX
PRE-AMPLIFIERS	5AR1, 5AR2 & 5AR3	8411457	1
BOOSTER AMPS	5AR4 AND 5AR5	8411486	1
LINE AMP.	5AR6	753060	2
MONITOR AMP.	5AR7	753087	3
POWER SUPPLY	5PS1	643264	4

30-31 Air mon in

Standard cart tone should measure 50mv here

CART 1

CART 2

Lights

Studio cue mute

Figure 23—Overall Schematic

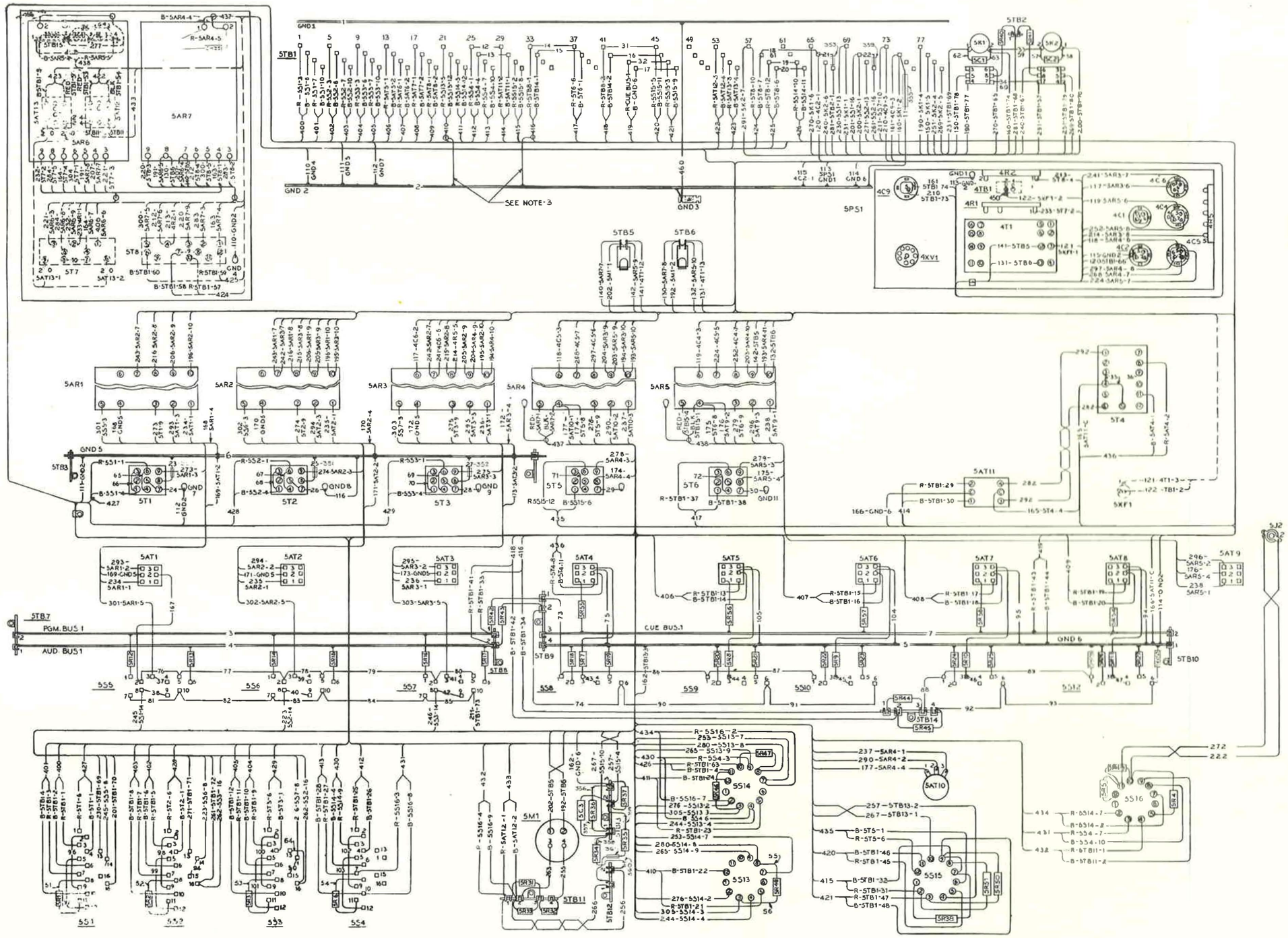

WIRE TABLE			LIST OF PTS	
WIRE NO INCI	DESCRIPTION	DWG OR PS NO	PT NO	OPEN NO'S
1 - 7	WIRE TINNED COPPER .081 DIA	105	112	
9 - 50	WIRE TINNED COPPER .032 DIA	105	113	
[illegible]	SLEEVING, BLACK .042 I.D.	8	115	
65-105	WIRE, SOLID BLK. .032 DIA.	805-57	119	
110-120	WIRE, WHT-BLACK 19/0092	805-8	120	
121-122	WIRE, RED/BLUE		121	
130-132	WIRE, BROWN		122	
40-142	WIRE, BRN/BLK 19/0092	805-8	123	
150	WIRE, WHITE 7/010	805-6	124	
170-177	WIRE, BLACK		125	
190-195	WIRE, BROWN		126	
200-207	WIRE, BRN/BLK		127	
210-216	WIRE, RED		128	
220-224	WIRE, RED/BLUE		129	
230-238	WIRE, ORANGE		130	
240-246	WIRE, YELLOW		131	
250-257	WIRE, YEL/BLK		132	
260-269	WIRE, YEL/RED		133	
270-279	WIRE, GREEN		134	
280-284	WIRE, GRN/BLK		135	
290-297	WIRE, GRN/RED		136	
300-305	WIRE WHT-BLUE 7/010	805-6	137	
400-438	SHIELDED PAIR -RED/BLK.	705-A2	141	
450	SLEEVING BLK. .172 I.D.	8	116	
460	CABLE BRAIDED	429-57	142	

①

FOR LIST OF PARTS FOR ABOVE WIRE TABLE SEE DWG 8918 712-502

NOTES

1- SOLDER ALL ELECTRICAL CONNECTIONS USING ITEM 143.
2- CABLE & THEN LACE WIRES WHERE NECESSARY, USING LACING CORD ITEM 144.
3- SOLDER ALL THE ENDS OF THE SHIELDS OF THE SHIELDED CABLES ON 5TB1 TO GROUND BUS (GND2)
4- THE FOLLOWING WIRES ARE TWISTED PAIRS

121 130 131 132 192 193 194 195 196
122, 140, 141, 142, 202, 203, 204, 205, 206,
250 254 256 281 282 257 222
260, 264, 266, 291, 292, 267, 272.

Figure 24—Overall Connection Diagram

LIST OF CONTENTS OF MASTER ITEM MI-11641-A

MI-11641-A TYPE BC-3C AUDIO CONSOLETTE (100/130V-50/60 CPS)

ITEM	QUAN.	DESCRIPTION	REFERENCE	PART OR GROUP
1	1	AUDIO CONSOLETTE	3918712	502
2	10	TUBE SHIELD	939200	8
3	1	DAVEN OIL	188223	1
4	1	INSTRUCTION BOOK	IB-24789-	4
5	1	PACKING LIST	THIS SHEET	

NOTE #1 THE BC-3C IS A SINGLE CHANNEL AUDIO CONSOLETTE WHICH PROVIDES AUDIO AMPLIFICATION AND CONTROL FACILITIES FOR AM-FM-TV STATIONS. THE CONSOLETTE, WITH ITS SELF CONTAINED POWER SUPPLY, MAY BE MOUNTED ON A FLAT TABLE TOP.

NOTE #2 ELECTRON TUBE COMPLEMENT REQUIRED FOR ITEM 1 ABOVE (MAY BE ORDERED SEPERATELY AS MI-11486-A)

1-RCA-5R4-GY
2-RCA-6V6-GT
2-RCA-12AU7
2-RCA-12AX7
5- -12AY7
5-MI-11299 (RCA SELECTED 12AY7)

COMPILED BY	THIS MI IS USED FOR	DISTRIBUTION	SHOP ORDERS	S	
W.J.J. 4-3-57	BROADCAST AUDIO	J3A WTT TC WBC PF FV	17417		17430 17442
			9492		
			9450		
			81505		
			9474		
			81511		

0 — APPROVED BY R.E. Manne 16 Apr 57

1 — ITEM 4 REF WAS IB-24789-2 George A. Singer Aug. 3, 1959

2 — ITEM 4 REF. WAS: IB 24789-3 George A. Singer MARC, 1963

THESE DRAWINGS AND SPECIFICATIONS ARE THE PROPERTY OF RADIO CORPORATION OF AMERICA, AND SHALL NOT BE REPRODUCED, OR COPIED, OR USED AS THE BASIS FOR THE MANUFACTURE OR SALE OF APPARATUS OR DEVICES WITHOUT PERMISSION.

MI-11641-A
MI-11641-B

RADIO CORPORATION OF AMERICA

BROADCAST AND COMMUNICATIONS PRODUCTS DIVISION

CAMDEN, NEW JERSEY

Trademark(s) Registered®
Marca(s) Registrada(s)