TECHNICAL MANUAL

CP-1500 SERIES
CONTROL PANELS

OPTION FOR
TVS/TAS-1000
TVS/TAS-2000
ROUTING SWITCHER SYSTEM

BTS Broadcast Television Systems
A joint company of Bosch and Philips

TECHNICAL MANUAL

Part Number 04-021011-007 Rev. H

CP-1500 SERIES CONTROL PANELS

OPTION FOR TVS/TAS-1000 TVS/TAS-2000 ROUTING SWITCHER SYSTEM

APRIL 1989

BTS

BROADCAST TELEVISION SYSTEMS, INC.

A joint company of Bosch and Philips

Stuart

© 1989 BTS BROADCAST TELEVISION SYSTEMS, INC., P.O. Box 30816, Salt Lake City, Utah 84130-0816
(801) 972-8000 Easylink 6245 4644 Telex TM38-8352 SLC All Rights Reserved
All specifications subject to change without notice.

**** NOTE ****

The following information is given to note compliance with the FCC Rules (47 CFR Part 15) designed to limit interference to radio and TV reception. The ruling establishes measurement procedures and frequency criteria for Class A computing devices (commercial and industrial applications) with the following conduction and radiation limits:

CLASS A COMPUTING DEVICE: CONDUCTION LIMIT (Part 15.812)

Frequency (MHz)	*Maximum RF Line Voltage (uV)*
0.45 - 1.6	1000
1.6 - 30	3000

CLASS A COMPUTING DEVICE: RADIATION LIMIT (Section 15.810)

Frequency (MHz)	*Distance (meters)*	*Field Strength (uV/m)*
30 - 88	30	30
88 - 216	30	50
216 - 1000	30	70

The policy of BTS Broadcast Television Systems, Inc., is one of continual development and improvement. For that reason BTS uses components and manufacturing techniques that provide the current state-of-the-art suppression of electromagnetic radiation. This equipment, in production before October 1, 1981, has not been tested to the above listed measurements. However, equipment such as this delivered after October 1, 1983 will have the measurements on record at the factory. Therefore, in compliance with the stated FCC Regulation, the following information is provided for the user:

WARNING

This equipment generates, uses, and can radiate radio frequency energy and if not installed and used in accordance with the instruction manual, may cause interference to radio communications. As temporarily permitted by regulation it has not been tested for compliance with the limits for Class A computing devices pursuant to Subpart J of of Part 15 of FCC Rules, which are designed to provide reasonable protection against such interference. Operation of this equipment in a residential area is likely to cause interference in which case the user at his own expense will be required to take whatever measures may be required to correct the interference.

WARRANTY

BTS Broadcast Television Systems, Inc., warrants that this product is free from defects in both materials and workmanship. Should any part of this equipment be defective, BTS Broadcast Television Systems, Inc., agrees, at its options to:

(A) Repair or replace any defective part free of charge (except transportation charges) for a period of 90 days from the date of the original purchase, provided the owner returns the equipment to the BTS Broadcast Television Systems, Inc., factory. No charge is made for parts or labor during this period.

(B) Replace or furnish replacement for any defective parts in the equipment for a period of one year from the date of original purchase. Replacement parts shall be furnished without charge except for labor and transportation.

This warranty excludes tubes and assembled products not of BTS Broadcast Television Systems, Inc., manufacture, whether or not they are incorporated in a BTS Broadcast Television Systems, Inc., product or sold under a BTS Broadcast Television Systems, Inc., part or model number.

THIS WARRANTY IS VOID IF:

(A) The equipment has been damaged by negligence, accident or mishandling, or has not been operated in accordance with the procedures described in the operating instructions; or

(B) The equipment has been altered or repaired by other than BTS Broadcast Television Systems, Inc., personnel or an authorized BTS Distributor.

(C) Adaptations or accessories other than those of BTS Broadcast Television Systems, Inc., have been made or attached to the equipment which, in the determination of BTS Broadcast Television Systems, Inc., shall have affected the performance, safety, or reliability of the equipment.

(D) The equipment's original serial/data plate has been modified or removed.

NO OTHER WARRANTY EXPRESSED OR IMPLIED, INCLUDING MERCHANTABILITY,

applies to the equipment, nor is any person or company other than an authorized BTS Broadcast Television Systems, Inc., Distributor allowed to assume any of the warranty for BTS Broadcast Television Systems, Inc. BTS Broadcast Television Systems, Inc., does not assume any responsibility or any consequential damages, expense or loss of revenue or property, inconvenience or interruption in operation experience by the customer due to a malfunction in the equipment. No BTS Broadcast Television Systems, Inc. warranty service shall extend the warranty period.

In case of unsatisfactory operation, contact BTS Broadcast Television Systems, Inc., Customer Service Department (801) 972-8000 for a return authorization number prior to returning the equipment. This warranty does not cover damage to the equipment during shipping and BTS Broadcast Television Systems, Inc., assumes no responsibility for such damage.

BTS

Broadcast Television Systems, Inc.

A joint Company of Bosch and Philips

2300 South 2300 West

P.O. Box 30816

Salt Lake City, Utah 84130-0816

(801) 972-8000/Telex TM38-8352 SLC

PARTS AND SERVICE

BTS BROADCAST TELEVISION SYSTEMS, INC.,
maintains a full stock of replacement parts available for immediate shipment.

For service on **BTS** products contact:

NORTH AMERICA CORPORATE HEADQUARTERS

BTS
BROADCAST TELEVISION SYSTEMS, INC.

24-Hour Emergency Service
(801) 972-8340

P.O. Box 30816
Salt Lake City, Utah 84130-0816
Telephone: (801) 972-8000
Easylink: 6245 4644
Telex: TM38-8352 SLC
2300 South 2300 West

SALES AND SERVICE HEADQUARTERS

900 Corporate Drive
Mahwah, New Jersey 07430
USA

Telex: 023 376 2558
Phone: (201) 529-1550
Telefax: (201) 529-5843

INTERNATIONAL PARTS & SERVICE

For Spare Parts

BTS Broadcast Television Systems GmbH/VKE
Robert Bosch Strasse 7
D-6100 Darmstadt
Federal Republic of Germany
Telephone: (49)(6151) 808611
Telex: (841) 419256 FE D (Attn: VKE)

For Service

BTS Broadcast Television Systems
GmbH/GRS-1
Robert Bosch Strasse 7
D-6100 Darmstadt
Federal Republic of Germany
Telephone: (49)(6151) 808429
Telex: (841) 419256 (Attn: GRS-1)

For all other countries, please contact your local BTS representative.

CP-1500 SERIES
TABLE OF CONTENTS

SECTION	DESCRIPTION	PAGE
1	INTRODUCTION	1-1
	CP-1500/1/2/D, CP-1550 CP-1501 FOUR + LEVEL CONTROL PANEL EP-1510/1511A LOGIC CARD PARTY LINE INTERFACE CARD DISPLAY AND KEYBOARD CARD (CP-1500) PANEL INTERFACE CARD (CP-1550)	1-2
2	INSTALLATION	2-1
	UNPACKING AND INSPECTION EXTERNAL CABLE CONNECTIONS POWER SUPPLY REQUIREMENTS UNIT MOUNTING	
	DIP SWITCH SETTINGS	2-3
	CP-1500 CONTROL PANEL LOGIC CARD PARTY LINE INTERFACE CARD	2-4
	CP-1501 CONTROL PANEL LOGIC CARD	2-5
	PARTY LINE INTERFACE CARD	2-6
	CP-1510 CONTROL PANEL LOGIC CARD	2-7
	PARTY LINE INTERFACE CARD	2-8
3	OPERATION	3-1
	GENERAL	
	CP-1500 OPERATION NUMERIC MODE MNEMONIC MODE CHANGE OUTPUT FUNCTION SELECT DIP SWITCH Video/Audio Only Change Output Enable Set Change Output After Take	3-2 3-3

CP-1500 SERIES
TABLE OF CONTENTS

SECTION	DESCRIPTION	PAGE
	CP-1500 OPERATION (cont'd)	
	Set Scroll Mode	3-3
	Matrix Restriction	
	One Digit Input Selection	
	PULLOUT REFERENCE DRAWER	
	CP-1501 FOUR + LEVEL CONTROL PANEL OPERATION	3-4
	READOUTS	
	CHANGE OUTPUT (CHG OUT)	
	CHANGE DISPLAY (CHG DISP)	3-5
	FOUR ARROW BUTTON	
	ENTRY OR STATUS (ENT/STAT)	3-6
	TAKE BUTTON	
	STORE BUTTON	
	RECALL BUTTON	
	TEN TAKE ALL BUTTON	3-7
	TAKE ALL TEN	
	EP-1510 PAGING	
	EP-1511 OPERATION	
	CP-1501/1511A DOWNLOADABLE CONTROL PANEL	3-7
	READOUTS	3-8
	CHANGE OUTPUT (CHG OUT)	
	SHIFT BUTTON	
	CHANGE DISPLAY (CHG DISP)	
	ARROW BUTTON	3-9
	ENTRY HOLDING REGISTER OR STATUS (ENT/STAT)	3-10
	TAKE BUTTON	
	STORE BUTTON	
	PAGE # BUTTON	3-11
	ENABLE ALL BUTTON	
	TAKE/PAGE BUTTON	
	EP-1511A OPERATION	
	CP-1550 OPERATION	3-11

CP-1500 SERIES
TABLE OF CONTENTS (cont'd)

SECTION	DESCRIPTION	PAGE
4	CIRCUIT DESCRIPTION	
	PANEL LOGIC CARD	4-1
	GENERAL	
	CIRCUIT DESCRIPTION	
	INTERRUPTS	
	MEMORY CHIP SELECT	
	6502A MICROPROCESSOR	4-2
	RESET	
	Time-out Reset	
	MASTER CLOCK	4-3
	INTERRUPT TIMER	
	BOARD FUNCTION REGISTERS	
	PARTY LINE INTERFACE CARD	4-5
	OVERVIEW	
	CIRCUIT DESCRIPTION	
	CARD CLOCK	
	PARTY LINE INPUT AMPLIFIER	
	PARTY LINE BUS INPUT	
	RESET	4-7
	CP-1500 DISPLAY AND KEYBOARD CARD	4-9
	GENERAL	
	OVERVIEW	
	CIRCUIT DESCRIPTION	
	DATA OUTPUT	
	DATA INPUT	
	Optional PushButton	
	CP-1550 PANEL INTERFACE CARDS	4-11
	OVERVIEW	
	CIRCUIT DESCRIPTION	4-12
	READ FUNCTIONS	
	WRITE FUNCTIONS	
	RESET	
5	MAINTENANCE	5-1
	GENERAL INFORMATION	
	RECOMMENDED TEST EQUIPMENT	
	CORRECTIVE MAINTENANCE	
	PERFORMANCE CHECKS	
	MOS CHIPS	5-2
	TROUBLESHOOTING	

CP-1500 SERIES
TABLE OF CONTENTS (cont'd)

SECTION	DESCRIPTION	PAGE
	CP-1500 SERIES CONTROL PANELS	
	CATEGORY SELECTION	5-3
	SELECTION	
	Example	
	SWITCHER LEVELS	5-4
	HOW TO USE THE WORK SHEET	5-6
	CP-1500 INPUT MNEMONICS LIST	5-8
	CP-1500 OUTPUT MNEMONICS LIST	5-11
	CP-1501/1511 DOWNLOAD MODIFICATION INSTRUCTIONS	5-15
6	PARTS LIST	6-1
7	DRAWINGS	7-1

CP-1500 SERIES
TABLE OF CONTENTS (cont'd)

LIST OF FIGURES

FIGURE	TABLE	DESCRIPTION	PAGE
1-1		CP-1500 CONTROL PANEL CONFIGURATIONS	xii
1-2		CP-1500 CONTROL PANEL CONFIGURATIONS	xiii
3-1		CP-1500/D PULLOUT REFERENCE DRAWER	3-i
	3-1	DIP SWITCH S1 FUNCTIONS	3-2
	3-2	DIP SWITCH S2 FUNCTIONS	3-3
	3-3	DIP SWITCH S1 FUNCTIONS	3-5
	3-4	DIP SWITCH S2 FUNCTIONS	3-7
	3-5	DIP SWITCH S1 FUNCTIONS	3-9
	3-6	DIP SWITCH S2 FUNCTIONS	3-11
4-1		LOGIC CARD BLOCK DIAGRAM	4-i
4-2		PARTY LINE INTERFACE	4-4
4-3		DISPLAY AND KEYBOARD CARD (CP-1500) BLOCK DIAGRAM	4-8
4-4		PANEL INTERFACE (CP-1550) BLOCK DIAGRAM	4-10
5-1		CP-1500 SERIES MNEMONIC KEY CAP LETTERING	5-5

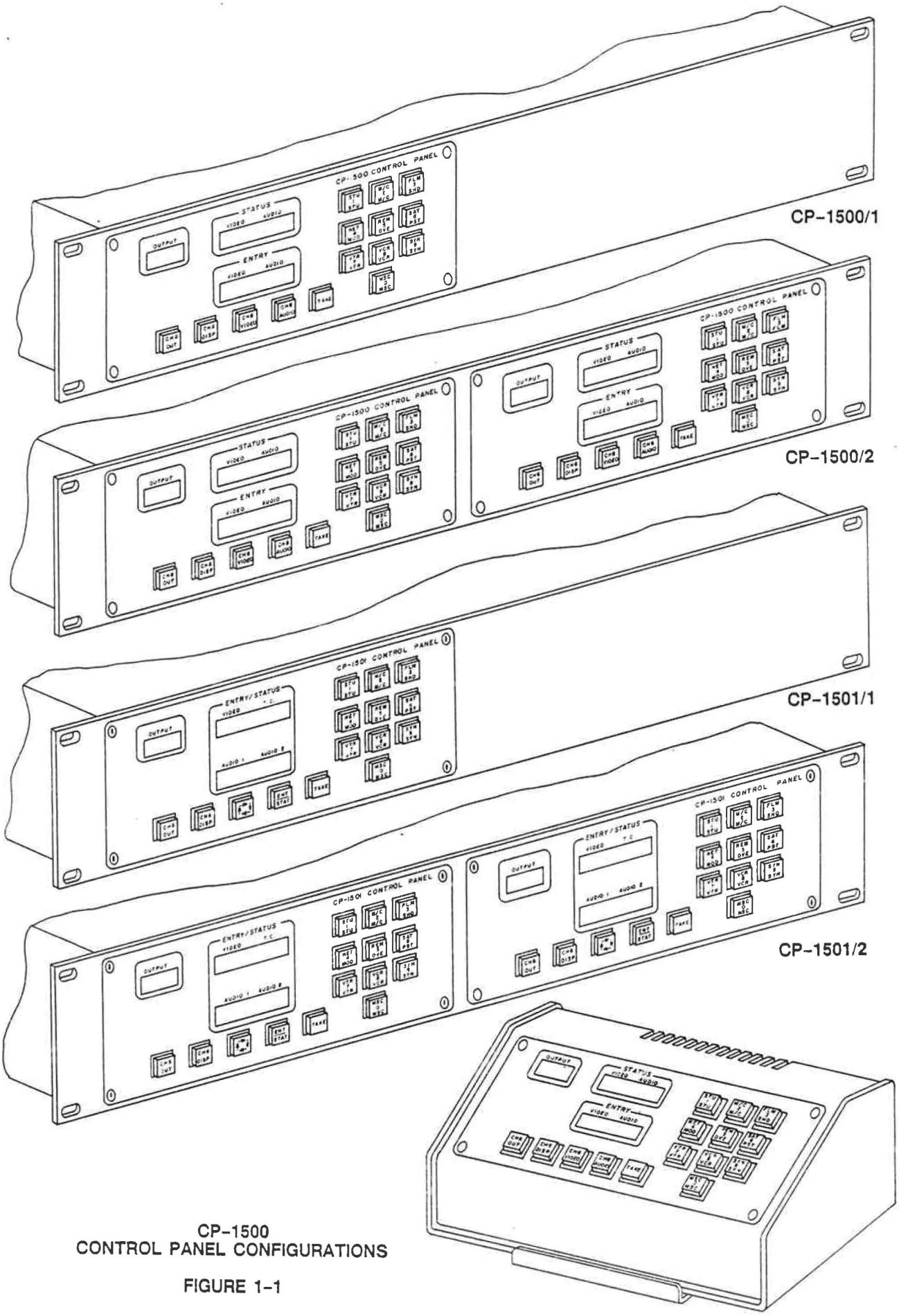

CP-1500
CONTROL PANEL CONFIGURATIONS

FIGURE 1-1

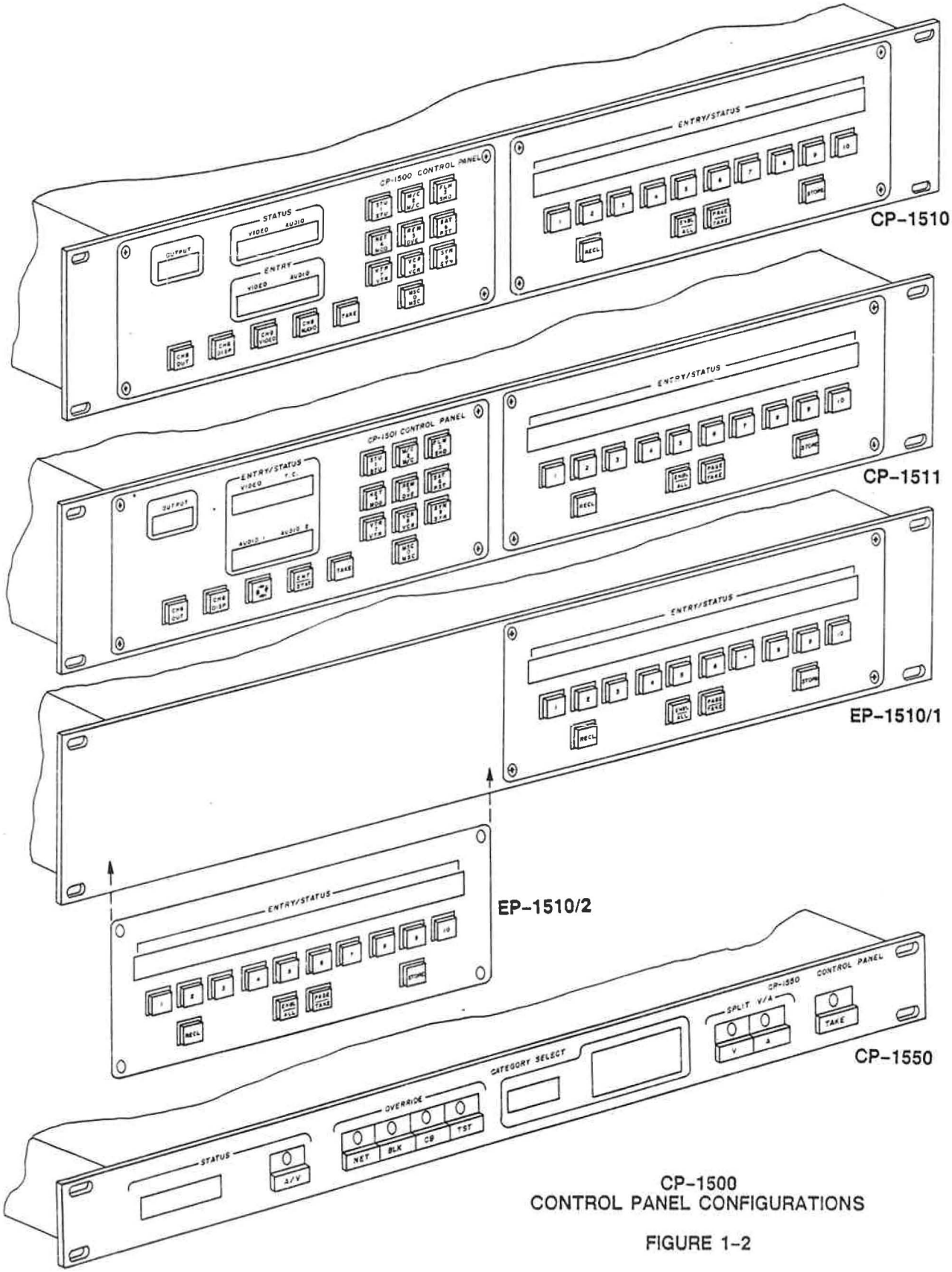

CP-1500
CONTROL PANEL CONFIGURATIONS

FIGURE 1-2

INTRODUCTION

CP-1500/1/2/D, CP-1550

The CP-1500 Series Control Panels are microprocessor-based systems used to control a TVS/TAS-1000 or TVS/TAS-2000 Audio/Video Distribution Switcher. The units communicate with the switcher by Party Line and receive status back from the switcher to confirm execution of switching commands.

Mnemonics and status information are displayed by LED readouts to inform the operator of switching system status at all times.

The CP-1500/1, 2 are rack-mounted units, with each utilizing the Logic card, Party Line Interface card and Display and Keyboard card. The CP-1500/1 has a single card combination installed on its rack panel, while the CP-1500/2 is a double unit that may be used in various configurations, such as using one section for presetting takes and the other for general switching or one section for video and the second section for audio switching. The CP-1500/D is a single card combination mounted in a desk-top enclosure. The three units are used for multiple-bus switching with the Change Output pushbutton installed, but can be configured for single-bus use by deletion of the button.

The CP-1550 Control Panel is a single-bus controller that utilizes the Logic card, Party Line Interface card and Panel Inter face card. Lever switches on the front panel allow selection of up to 100 possible mnemonic inputs with a standard switcher system. The panel allows video and/or audio only switches or combinations of both and features Override switches that are user-designated on installation and can be later changed with internal switches.

The units are self-contained, with internal power supplies that can be strapped for operation on either 115V 60Hz or 240V 50Hz A.C. power lines with fuse protection.

CP-1501 FOUR + LEVEL CONTROL PANEL

The four + level designation of the CP-1501 Control Panel means the panel is capable of controlling switcher levels 3-7 in addition to those controlled by the CP-1500. When switcher levels 5-7 are in use, the Audio 2 display contains *2** to tell the operator the second page is being displayed.

EP-1510/1511A

The EP-1510/1511A with the extended ENTRY/STATUS display operates in the same manner as the CP-1500 except for when any of the buttons on the ENTRY/STATUS panel are pressed. The extended display will display only the video entry or status for each of the ten TAKE buttons.

The CP-1501 and EP-1510/1511A contain the same cards as the CP-1500, but operating software and front control panels are different to accommodate their unique functions.

LOGIC CARD

The Logic card is a 65C02 microprocessor card utilizing one or two Programmable Read-only Memories for storage of operating software. Additional software storage is allowed by use of jumpers for installation of larger PROMs. Random Access Memory (RAM) is provided by two 1K chips addressed directly by the microprocessor for scratchpad storage.

Two Reset circuits protect the card from brownouts and power failure by reinitializing the processor when the problems occur so that it will continue operation with very little down time.

PARTY LINE INTERFACE CARD

The Party Line Interface card connects the Control Panel unit to the Party Line for control of switcher functions by the Party Line and is a means to return status of the machines under Switcher control.

The interface receives data and commands from the Party Line and generates interrupts to the processor for handling of the incoming traffic. Data from the Logic card Data Bus is also relayed to the Party Line by the Interface card.

A card clock controls receive and transmit timing, along with other card functions. Bits received and transmitted are counted and status of card functions is returned to the Logic card processor on the Data Bus.

A reset circuit protects the operation of the card in case of power failure or brown out.

DISPLAY AND KEYBOARD CARD (CP-1500)

The Display and Keyboard card is used in the CP-1500, along with the Logic card and Party Line Interface cards. The card provides alphanumeric readout of output, audio and video entry and status data, along with circuitry to interface controlling push buttons to the Data Bus for transfer to the Logic card. With the optional Change Output button installed, the unit can control multiple output buses from the distribution switcher.

Status data is received from the Logic card on the Data Bus and is sent to the readouts under control of Address Bus lines A0-A4. Push button data is read onto the Data Bus from Buffer/Drivers enabled by Logic card I/O device lines IO5 and IO6.

PANEL INTERFACE CARD (CP-1550)

The Panel Interface card provides an inter face between the unit front panel and the Logic card. The front panel controls and several internal switch registers are read by the Logic card on command from the Take button to originate a switching command to the routing switcher. The card receives status back from the Logic card after a command has been sent to confirm action taken by the switcher. The status is displayed on the front panel readouts.

The Panel Interface card includes two other cards which provide connections for the switches and readouts. The Display and Take card provide circuitry for the front panel readout displays and Override switches, while the Entry card provides connecting circuitry for the Audio and Video-only buttons and the Take button.

INSTALLATION

UNPACKING AND INSPECTION

Each control panel is tested, inspected and has been found free of defects prior to shipment. Before unpacking the equipment, inspect the shipping carton for evidence of freight damage. If the contents have been damaged, notify the carrier and the manufacturer. Retain all shipping cartons and padding material for inspection by the carrier.

After unpacking, carefully inspect all equipment for freight damage.

DO NOT RETURN DAMAGED MERCHANDISE TO THE MANUFACTURER UNTIL AN APPROPRIATE CLAIM HAS BEEN FILED WITH THE CARRIER AND A MATERIAL RETURN AUTHORIZATION NUMBER HAS BEEN RECEIVED FROM THE MANUFACTURER.

UNIT MOUNTING

On receipt of the unit from the factory, it should be unpacked and checked as described above, and then mounted in its designated position.

POWER SUPPLY REQUIREMENTS

A.C. power to the unit has been strapped for 117V, 60Hz unless 240V, 50Hz was specified on the original order. For changing power supply A.C. input from one voltage to the other, refer to the schematic of the unit in the Drawings section. Appropriate outlets for A.C. power should be supplied. The unit is fused, with fuseholder accessible on the rear panel.

EXTERNAL CABLE CONNECTION

External coaxial cables looping the party line to the unit input and output require male BNC connectors, Amphenol type 68176 or equivalent. Use coaxial cable RG-59/U or equivalent for party line. The party line is looped through the unit so either connector can be used for input and output. Do not terminate an unused party line connector.

DIP SWITCH SETTINGS
CP-1500 CONTROL PANEL

ON = 1 LSB = BIT 0
OFF = 0 MSB = BIT 7

LOGIC CARD

Switch 1

S1-8 Video Only

S1-7 Audio Only

S1-6 (1) X,Y Mode
(0) Single Output Mode

S1-5 (1) Enables the changing of an output. (Software will expect a new output number entry after each time the Take button is depressed.) Allows a single input to be switched to a different output at each take.

(0) Disables the changing of an output.

S1-4 (1) Scrolling (Controls entry of numbers into the display in the mnemonic mode. This allows any number of buttons on the ten key pad to be operated to enter the numbers from right to left into the display until "TAKE" button is pressed. These numbers represent the input number sent to the switcher. When using scrolling feature, the numbers that have been scrolled off the display to the left have no effect upon the switch command.)

(0) Disabled Scrolling (The first button pressed following a take is assumed to be the category ENTRY.)

S1-3 (1) Numeric Mode (Checks mnemonic table for I/O number.)
(0) Normal operation

S1-2 (1) Single digit input selection after category.
(0) Normal operation

S1-1 (1) Extended party line (audio and video control only)
(0) Normal party line

Switch S2

S2-8 (1) One digit output # after category
(0) Normal operation

S2-7 thru S1-1 SPARE

PARTY LINE INTERFACE CARD

Switch S1

S1-8 MSB
S1-7
S1-6
S1-5 Polling Name (0-127) in binary
S1-4
S1-3
S1-2
S1-1 LSB

Note: Polling name in binary (0-127), the polling name can never be duplicated in any one system. The following polling names are reserved when using the TVS/TAS-2000 Switcher:

0 (REFRESH) 127 (RESET)

The following polling names are reserved when using the TVS/TAS-1000 Switcher:

112 and 126 (REFRESH) 127 (RESET)

Switch S2 - Output Number (BCD)

S2-8 MSB
S2-7 OUTPUT
S2-6 TENS
S2-5 LSB
S2-4 MSB
S2-3 OUTPUT
S2-2 UNITS
S2-1 LSB

CP-1501/1501A CONTROL PANEL

LOGIC CARD

Switch S1

S1-8 LSB

S1-7 Level Selection (BCD) - Up to seven levels

S1-6 MSB

S1-5 (1) X,Y Mode
(0) Single Output Mode

S1-4 (1) Scrolling (Controls entry of numbers into the display in the mnemonic mode. This allows any number of buttons on the ten key pad to be operated to enter the numbers from right to left into the display until "TAKE" button is pressed. These numbers represent the input number sent to the switcher. When using scrolling feature, the numbers that have been scrolled off the display to the left have no effect upon the switch command.)

(0) Disabled Scrolling (The first button pressed following a take is assumed to be the category ENTRY.) Controls entry of numbers into the display in the mnemonic mode.

S1-3 (1) Numeric Mode (Checks mnemonic table for I/O number.)
(0) Normal operation

S1-2 SPARE

S1-1 (1) Extended party line
(0) Normal party line

Switch S2

S2-8 (1) One digit output # after category
(0) Normal operation

S2-7 (1) Dedicated EP-1510 programming (outputs in PROM)
(0) Normal operation

S2-6 (1) Display Status, Entry Only (Displays only what is entered from that particular control panel.)

(0) Entry/Status, Entry and Auto Status Display (Monitors current status, even if entered from a different control panel.)

S2-5 (1) The output number stored will be the output number in DIP Switch S2 on the Party Line Interface Card.

(0) Normal operation

S2-4 Indicates number of EP-1510 in system (0-3).

S2-2 (1) Tally Signal (to enable "Take" button) for special outputs.
(0) Normal 0peration

S2-1 (1) Cold Start Bit (if suspect bad RAM)
(0) Normal 0peration

PARTY LINE INTERFACE CARD

Switch S1

S1-8 MSB
S1-7
S1-6
S1-5 Polling Name (0-127) in binary
S1-4
S1-3
S1-2
S1-1 LSB

Note: Polling name in binary (0-127), the polling name can never be duplicated in any one system. The following polling names are reserved when using the TVS/TAS-2000 Switcher:

0 (REFRESH) 127 (RESET)

The following polling names are reserved when using the TVS/TAS-1000 Switcher:

112 and 126 (REFRESH) 127 (RESET)

Switch S2 - Output Number (BINARY)

S1-8 MSB
S1-7
S1-6
S1-5
S1-4
S1-3
S1-2
S1-1 LSB

CP-1511 ADL CONTROL PANEL

LOGIC CARD

Switch S1

S1-8		Video Only
S1-7		Audio Only
S1-6	(1)	X,Y Mode
	(0)	Single Output Mode
S1-5	(1)	Enables the changing of an output. (Software will expect a new output number entry after each time the Take button is depressed). Allows a single input to be switched to a different output at each take.
	(0)	Disables the changing of an output.
S1-4	(1)	Scrolling (Controls entry of numbers into the display in the mnemonic mode. This allows any number of buttons on the ten key pad to be operated to enter the numbers from right to left into the display until "TAKE" button is pressed. These numbers represent the input number sent to the switcher. When using scrolling feature, the numbers that have been scrolled off the display to the left have no effect upon the switch command.)
	(0)	Disabled Scrolling (The first button pressed following a take is assumed to be the category ENTRY.)
S1-3	(1)	Numeric Mode (Checks mnemonic table for I/O number.)
	(0)	Normal operation
S1-2	(1)	Single digit input selection after category
	(0)	Normal operation
S1-1		SPARE

Switch S2

S2-8	(1)	One digit output # after category
	(0)	Normal operation
S2-7	(1)	Dedicated EP-1510 programming (outputs in PROM)
	(0)	Normal operation
S2-6	(1)	Display Status, Entry Only (Displays only what is entered from that particular control panel.)
	(0)	Entry/Status, Entry and Auto Status Display (Monitors current status, even if entered from a different control panel.)
S2-5	(1)	The output number stored will be the output number in DIP Switch S2 on the Party Line Interface Card.
	(0)	Normal operation

S2-4 Indicates number of EP-1510 in system (0-3).

S2-3

S4	S3	
0	0	(one panel)
0	1	(two panels)
1	0	(three panels)
1	1	(four panels)

S2-2 (1) Tally Signal (to enable "Take" button) for special outputs.
(0) Normal 0peration

S2-1 SPARE

PARTY LINE INTERFACE CARD

Switch S1

S1-8 MSB
S1-7
S1-6
S1-5 Polling Name (0-127 in binary
S1-4
S1-3
S1-2
S1-1 LSB

Note: Polling name in binary (0-127), the polling name can never be duplicated in any one system. The following polling names are reserved when using the TVS/TAS-2000 Switcher:

0 (REFRESH) 127 (RESET)

The following polling names are reserved when using the TVS/TAS-1000 Switcher:

112 and 126 (REFRESH) 127 (RESET)

Switch S2 - Output Number (BINARY)

S1-8 MSB
S1-7
S1-6
S1-5
S1-4
S1-3
S1-2
S1-1 LSB

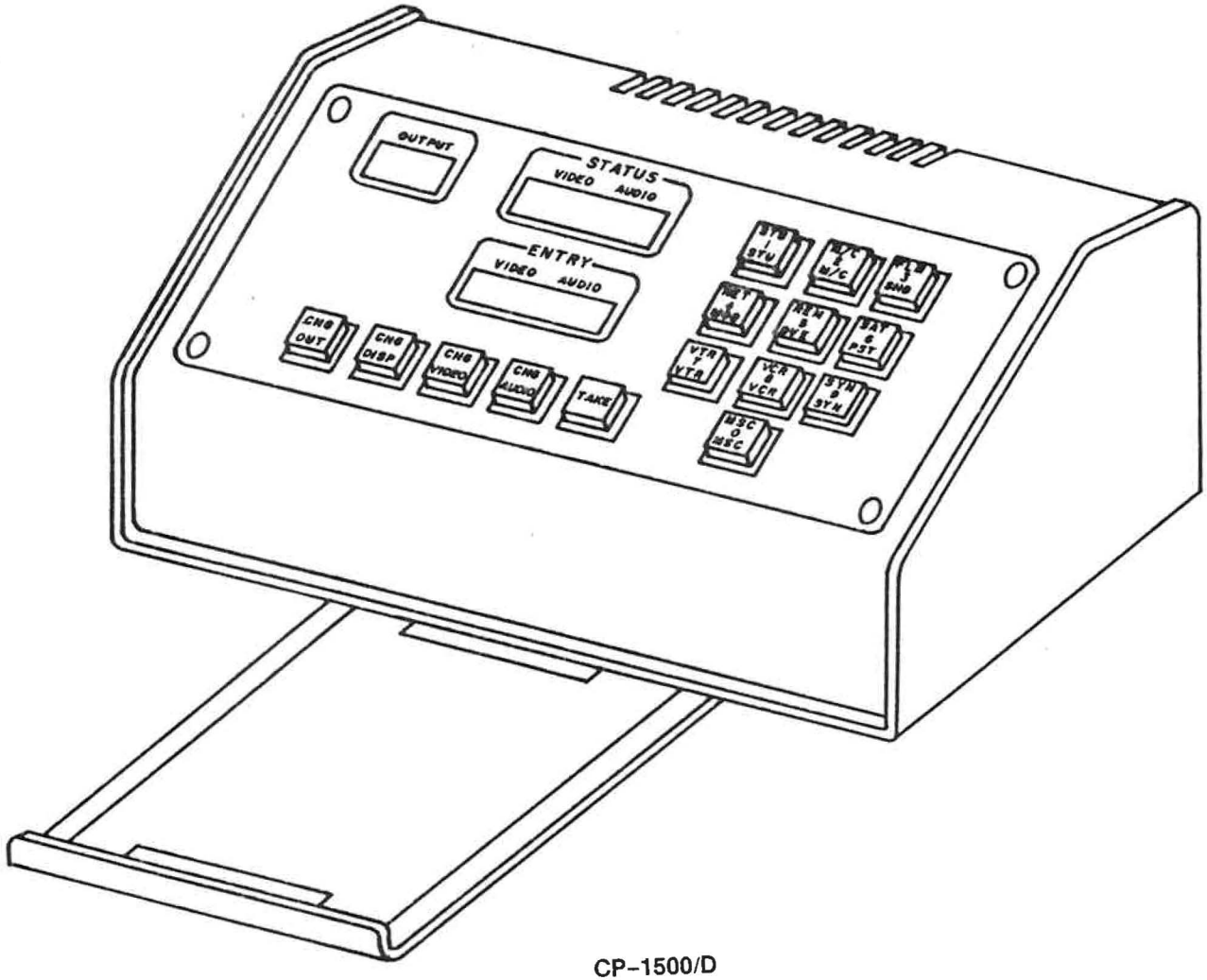

CP-1500/D
PULLOUT REFERENCE DRAWER
FIGURE 3-1

OPERATION

GENERAL

General operation of the CP-1500 Series and CP-1550 Control Panels consists of selection of the video and audio input sources and switching them to the desired output bus. The output buses can be used to supply video and audio inputs to any video system device such as monitors, video tape machine, broad cast equipment, etc.

Refer to the Operations section of the TVS/TAS-1000 or TVS/TAS-2000 Video/Audio Distribution Switching System manual for a comprehensive discussion of switching operations.

CP-1500 OPERATION

The CP-1500 can operate with a TVS/TAS-1000 or two-level TVS/TAS-2000 system in either of two modes: i.e., a Numeric mode or a Mnemonic mode. In the Numeric mode, readouts show the number of the input and output entries and status, while in Mnemonic mode, the numerical designations are converted to mnemonics and displayed by the front panel LED read outs.

NUMERIC MODE

At power up, the unit will initialize in the numeric mode and default to an output specified by the Output DIP Switch located on the Party Line Interface card. The output number entered by the switch is displayed in the OUTPUT readout window.

The number displayed by the STATUS readout for video and audio will be the input number currently connected to the output of the routing switcher, if the switcher has a refresh memory installed.

To set up a switch from the present input, the operator will push buttons on the ten key pad for the new input number, i.e., if camera 3 on input 12 is desired, a number 12 is entered by the key pad and is displayed in the ENTRY readout window for both video and audio. At this point, no change has taken place at the routing switcher. To make a change, the operator then presses the TAKE pushbutton. When the routing switcher makes the switch, it will send confirming status data back to the CP-1500 for display in the STATUS window.

If separate video and audio sources are to be combined into a single switch, the operator must push the CHANGE VIDEO button and enter the new video source number. The number will appear in the ENTRY readout. To specify a different Audio input for the switch, the CHANGE AUDIO button must then be operated and the audio source number numbers displayed in the ENTRY window, the operator can make the switch simultaneously by pushing the TAKE button. This feature may be used in either the Numeric or Mnemonic modes.

The numbers displayed in the ENTRY window are always those of the last entered switch command for both video and audio. Numbers displayed in the STATUS and OUTPUT windows are always the current input and output numbers of the routing switcher. This allows the operator to see if another switch has been made since his last entry.

MNEMONIC MODE

To change operating mode of the CP-1500 from Numeric mode, the operator must push the CHANGE DISPLAY button. Operation of the button will change all displayed numbers to their equivalent mnemonic. If a 12, signifying camera 3 on input 12, is still being displayed in the ENTRY and STATUS readouts, the 12 will be changed to read CA03. Using this function, the operator can change the display from numeric to mnemonic to determine the input label of any routing switcher input without disturbing the present switcher output configuration.

Ten mnemonic source categories are available from the ten-button keypad including Misc., which can be used for switcher inputs other than those listed on the buttons.

Sample category buttons for use in the mnemonic mode are:

1. MON Monitor
2. CAM Camera
3. VTR Videotape Machine
4. TC Time Code
5. CG Character Generator
6. PGM Program
7. AUTO Automation
8. EDIT Editor
9. AUX Auxiliary Channels
0. MISC Miscellaneous

Any selection of category mnemonics may be obtained on special order.

To switch from camera 3 (CA03) to VTR 4, the operator must first push the button marked VTR (in this example, the number 3 button on the 10 button pad) and then push the 0 and 4 buttons. The numbers are read into the display in mnemonic mode from the right. If the VTR button is pushed and only the number 4 button operated, the display will contain VT04. However, the next button pushed will also be entered into the display from the right. The button sequence for a switch in mnemonic mode should be as follows:

CHANGE DISPLAY	(To access mnemonic mode from numeric mode.)
VTR (#3 button)	(To specify a video tape machine.)
#0 button	(May be omitted on single digit mnemonic entries.)
#4	(The ENTRY readout now contains VT04.)
TAKE	(To command the switch to be made by the routing switcher. The STATUS display will read VT04 when the switch is made.)

CHANGE OUTPUT

If the switching system contains multiple output buses, the CHANGE OUTPUT button on the panel is used to change from the initial default output in use to another output bus.

When the button is operated, the OUTPUT readout will indicate the output bus that will receive the input if a switching action is then initiated from the panel. The status of the switch mode on the previous bus is not affected.

To CHANGE OUTPUT button can be operated in either the numeric or mnemonic mode, but the OUTPUT display will remain in the same mode as the previous output was displayed, unless the CHANGE DISPLAY button is operated.

The use of the CHANGE OUTPUT button is optional and may be inhibited by an internal DIP switch setting. On special order, the button may be omitted entirely. For single output bus switching systems, the output number for the routing switcher is set in the output DIP switch register located on the Party Line Interface card.

DIP SWITCH S1 FUNCTIONS
TABLE 3-1

DIP SW #	DESCRIPTION
	1 = ON = CLOSED, 0 = OFF = OPEN
(8–7) =	Levels to control: 00 = audio follows video 10 = video only (switch 8) 01 = audio only (switch 7) 11 = audio follows video, no splits
(6) =	1 – Look at output button (multibus)
(5) =	1 – Set to change output after Take
(4) =	1 – Scroll display until function button is pressed.
(3) =	1 – Numeric mode check if in mnemonic table.
(2) =	1 – For 1 digit input number after category
(1) =	0 – Non-expanded party line (A/V) 1 – Expanded party line, only (A/V)

DIP SWITCH S2 FUNCTIONS
TABLE 3-2

DIP SW # DESCRIPTION

1 = ON = CLOSED, 0 = OFF = OPEN

(1-7) = SPARES

(8) = 1 - 1 digit output selection number after category

FUNCTION SELECT DIP SWITCH

DIP Switch S1 on the Logic card of the CP-1500 is used as a function selector to allow the unit to be preset for several optional functions. (See Table 3-1 and 3-2.)

Video/Audio Only

If switches 7 and 8 are open, the panel will command an *Audio follows Video* switch when the TAKE button is pressed and software will then look at the CHANGE VIDEO, CHANGE AUDIO buttons to see if the operator desires a switching sequence change. If either switch 8 or 7 is closed, the panel will command either a *Video Only* take or an *Audio Only* take when the TAKE button is pressed. Switch 8 provides the *Video Only* take and Switch 7 provides *Audio Only*. If both are set, the panel becomes a dedicated AFV panel. The CHG AUD and CHG VID buttons are ignored.

Change Output Enable

Switch 6 of the S1 switch register enables the CHANGE OUTPUT button on the panel.To disable the button and prevent output changes from the panel, the switch should be open. This makes the panel dedicated to the one output number specified on the output DIP switch on the party line board. If the switch is closed, the CHANGE OUTPUT button on the panel will function, and the panel becomes a X-Y controller.

Set Change Output after Take

If switch 5 and 6 are closed, the panel will expect a new output number entry after each time the TAKE button is pushed, allowing a single input to be switched to a different output after each take.

Set Scroll Mode

Switch 4 controls entry of numbers into the display in the Mnemonic mode. In normal operation with the switch open, the first button pressed following a take is assumed to be a category entry. The next two buttons pressed are assumed to be numbers. If a fourth button is pressed, it will be assumed to be a new category. The TAKE button may be pressed at any time the entry display indicates the desired input selection. If the switch is closed, any number of buttons on the 10-key pad may be operated to enter the numbers into the display from the right. In this mode, the numbers will be entered from the right and will continue stepping to the left through the display until a take is executed. When the TAKE button is pressed in the Scroll mode, the numbers in the display represent the input numbers sent to the routing switcher. Numbers that have been scrolled off the display to the left have no effect on the switch command.

Matrix Restriction

Switch 3 can be used to restrict matrix access to those numeric inputs and outputs contained in the mnemonics PROM. This feature may also be used to restrict operators at certain control points by equipping the CP-1500 with a mnemonics PROM that contains only a subset of the full switcher matrix. With switch 3 ON, only those mnemonics defined in the PROM are accessible, but any input or output can be switched in the Mnemonic mode.

One Digit Input Selection

If switch 2 in ON, only a one digit input selection number is defined for that panel.

TVS/TAS-2000 OPERATION

When switch 1 in ON, the CP-1500 Control Panel can be operated in a TVS/TAS-2000 system that is set up for extended party line operation. The CP-1500 will only control the video and one audio level (levels 1 & 2), no other levels can be controlled.

<u>One Digit Output Selection</u>

If Switch 8 of the S2 Switch is ON, only one digit output selection numbers are defined for that panel.

PULLOUT REFERENCE DRAWER

The CP-1500/D features a pullout reference drawer that extends to the front and can be used for a listing of inputs, outputs and mnemonics.

DIP SWITCH S2 FUNCTIONS TABLE 3-4

DIP SW #	DESCRIPTION
	1 = ON = CLOSED, 0 = OFF = OPEN
(8) =	1 - One digit output # after category.
(7) =	1 - Use internal factory installed outputs for EP-1510 panel.
(6) =	1 - EP-1510 panel is entry only display.
	0 - EP-1510 panel is entry and auto status display.
(5) =	1 - EP-1510 outputs are output DIP switch # on party line board.
(3, 4)=	Number of EP-1510 panels in system (0-3).
(2) =	1 - Look at tally signal for special outputs.
(1) =	1 - On powerup, clear all RAM in system, otherwise, do a warm start.

TEN TAKE ALL BUTTON

Each of the ten Take buttons will do a Take with the internally stored I/O whenever only the Take button is pushed. If DIP Switch S2 bit 6 on the Logic card is on, the readout will be entry only on the EP-1510 display. If DIP Switch S2 Bit 6 is off, the readout will also display the status of the Take. Whenever the Take button is pressed, the CP-1501 display will contain the true status of that Take. The extended EP-1510 display will automatically switch to Status mode after a given period of time in which no buttons are pressed (about 45 seconds).

TAKE ALL TEN

When both the ENABLE/ALL and the TAKE/PAGE buttons are held down together, all crosspoint information stored in the ten currently displayed tables of the CP-1510, will be sent as takes to the routing switcher. This is used as a salvo type command.

EP-1510 PAGING

Each EP-1510 can have up to three pages of switcher/crosspoint information. By pushing the TAKE/PAGE button, the display shows the video information for each of the ten programmed take buttons. The RECALL button must be pushed to see all the information that each of the buttons contain.

EP-1511A OPERATION

Refer to the operation section covering the CP-1501 Control Panel. The EP-1511A with the extended ENTRY/STATUS display operates in the same manner as the CP-1501 except when any of the buttons on the EP-1510 panel are pressed. The extended display will display only the video entry or status for each of the ten Take buttons. Up to four EP-1510 panels can be connected together (see S2 Switches 3 and 4). Refer to Table 3-4 for the setting of different options.

CP-1501/1511A DOWNLOADABLE CONTROL PANEL

The CP-1501 Control Panel is capable of controlling switcher levels 1-7. The levels that it will control are enabled by DIP Switch S1 (see Table 3-5). When switcher levels 5-7 are in use, the Audio 2 display contains *2** to tell the operator the second page is being displayed.

The CP-1501/1511A operates in a manner similar to the CP-1501 Control Panel, in that it can be operated in either a numeric or mnemonic mode. When a Take is made onto the Party Line, whatever is in the display is sent to the Party Line. The only exception to this is when the control panel is setup for use with more than four levels (levels 5-7), the values currently in the other levels are also sent.

The control panel has five alphanumeric readouts to display data and selections; a 10-key pad to entry data and five buttons to control panel operation. The readouts and control buttons are described below.

READOUTS

The front panel of the CP-1501 contains five alphanumeric readouts. The upper left read out displays the current output being monitored and controlled. The remaining four readouts show the data for the levels of the switcher being controlled. Switchers controlled by the panel and the readout positions are:

Video	in Video display (video switcher).
Audio	in Audio 1 display (audio switcher).
Time Code	in Time Code display (Switcher 3).
Audio 2	in Audio 2 display (Switcher 4).
Switcher 5	in Video display on page 2.
Switcher 6	in Audio 1 display on page 2.
Switcher 7	in Time Code display on page 2.

Three modes of operation exist for the readouts:

The Status mode (solid display) shows the current input selections for the output selection.

The Entry mode (fast blink display) shows selections that have been saved in the entry section of the control panel in preparation for a switcher take to be made.

The Modify Status Entry mode (fast blink display) is entered when any one of the keypad keys, or the arrow keys, are pushed. If the keypad key is pressed, that data will change, but if the arrow is pressed, the display that starts to blink will be the data that will change when the keypad keys are pressed.

The ENT/STAT pushbutton allows manual switching between the saved entry and status modes.

The mode is automatically switched to Status mode after no buttons on the control panel have been pushed for a given period of time (about 45 seconds).

CHANGE OUTPUT (CHG OUT)

The Change Output (CHG OUT) pushbutton allows changes of the output selection. Pressing the CHG OUT button clears all of the Entry/Status readouts. If this does not occur, the control panel is in a single output bus configuration (see Table 3-5).

When the CHG OUT button is pressed and the readouts cleared, the control is in Output Entry mode. The Output Entry display will blink rapidly and the Entry/Status display will not blink. A new output selection should be entered on the key pad.

When selecting the category and selection number, the Output display will show the selected output mnemonic. The control panel requires a two-digit selection number after category entry. If the output mnemonic blinks slowly, the selected output is not in the output table and a new selection must be made. After an output selection is entered, the input selection readouts will display the status of the selected output.

Once the desired output selection is made, five options are available:

1. Select a new output.

2. View selections in the Mnemonic or Numeric Display mode. (See CHG DISP)

3. Change the input selections after the status appears. (See Arrow button section below.)

4. Lock output from having its status changed.

5. Send a take command to the switcher. (See TAKE)

SHIFT BUTTON

The Shift button is used to access three other modes or commands on the control panel. The lower display will show DISP and LOCK. While holding the button down, if the arrow button is pushed, the display changes. This allows the operator to view the numeric representation of the mnemonic output and input selections that have been made. The button alternates between the Mnemonic and Numeric Display modes. When in Numeric Display mode, a check is made of the mnemonic table for that output or input if DIP Switch S1 bit 3 is on. If the output or input is contained in the mnemonic table, the output or input number is a valid number for the control panel. (See Table 3-5.) If no mnemonics are in the system, pushing the button will do nothing and the display will always be in Numeric mode.

While holding down the Shift button and the ENT/STAT button is pushed, that panel is able to toggle the lock and unlock of the output that is currently in the output display. If the display above the ENT/STAT button does not show LOCK, it will contain the Party Line polling name of the panel that has locked the output number. There should also be an "*" blinking on and off between it and the current character on the left side of the output display.

The LOCK feature can also be defined as a mnemonic and be called up like any other mnemonic (category and selection number). For instance, a category and selection for Lock could be defined, and whenever a take is made on that special source, it will toggle between the lock and unlock of the current output. The internal special source number for a lock/unlock is 251 decimal or $F8 binary. Another special unlock mnemonic that could be defined for a special control panel is the force unlock (252 decimal or $FC binary). This allows the special control panel to unlock any output that has been locked, regardless of the control panel that locked it. No other control panel can unlock that output unless it has the special force unlock source defined in its special mnemonic table.

The Chop feature can be implemented by first doing a Take on the source to chop on, then load the source to chop against in the display. While holding down the Shift button, press the Take button to start the chop process.

The video source in the video display window will automatically chop with the previous video source to the current output. A chop will last about one minute before it will automatically stop. Doing a normal take to the output will also stop the chop.

ARROW BUTTON

The Arrow button has three functions:

In Entry mode, it allows the input selections to be changed individually or as a group. If more than four switchers are being controlled, pressing the four arrow button in Entry mode allows changing of the other switchers.

In Status mode, the display will be the second page of status. While holding down the arrow button, if the ENT/STAT button is also pushed, the source information that is currently in the display windows will be stored in an entry holding register. This is use when a specific source will be sent to several inputs or when a source will be called up a number of times. This entry holding register can be recalled into the current display windows by pressing the ENT/STAT button.

DIP SWITCH S1 FUNCTIONS
TABLE 3-5

DIP SW #	DESCRIPTION
	1 = ON = CLOSED, 0 = OFF = OPEN
(6-8) =	Levels to control: 0-2 = A/V; 3-7 = levels 3-7
(5) =	1 - look at output button (multibus)
(4) =	1 - Scroll display until function button is pressed.
(3) =	1 - Numeric mode check if in mnemonic table.
(2) =	Spare
(1) =	0 - Non-expanded party line (A/V)
	1 - Expanded party line (up to 7 switcher levels).

Pressing the arrow button will change the entry readout from all levels to video to audio, etc., through all switchers that are being controlled by the panel. The readout displays will then start over and rapidly blink all entries, signifying that all can be changed at once. For example, the same selection can be entered into all switchers by selecting the input data on the key pad when the readouts are all rapidly blinking.

It is also possible to use the arrow button to change the Audio 1 selection only. To enter a new selection for Audio 1, press the arrow button twice so the only display blinking rapidly is the Audio 1 display. It is therefore possible to select any combination of input selections for all levels. Once the input selections have been made, the five options listed at the end of the Change Output section are available.

ENTRY HOLDING REGISTER OR STATUS (ENT/STAT)

The Entry Holding Register or Status (ENT/STAT) button switches the input display between the Entry Holding Register and Status modes. Pressing the button alternates between these two modes. If the Entry/Status display is blinking fast, the display is the value of the Entry Holding Register. When the display is constantly on, the panel is in Status mode.

To load information in the Entry Holding Register, hold down both the arrow and ENT/STAT buttons. The information in the current display windows will now be stored in the Entry Holding Register.

If status for switchers 5-7 is desired, the arrow button must be pushed. When the audio 2 display shows *2**, the remaining displays contain the status (see Read-out Section). The control panel is automatically placed in Status mode when a take is sent to the switcher. The control panel will also automatically revert to Status mode if no buttons are pressed within a given time period (about 45 seconds).

> **NOTE**
> Whenever any key is pressed on the 10-key pad, the control panel will automatically go into Entry mode.

TAKE BUTTON

The Take button causes the current contents of the window readouts to be sent on the party line to switch the output that is displayed in the output readout. It also causes the input readouts to be

switched to the Status mode and to display the status of the switcher. Any of the five options listed at the end of the Change Output section may be used following a take. For example, it is possible to set more than one switcher output to the same source. To do this, enter the source desired and while holding down the arrow key, push the ENT/STAT button. This causes the sources in the display windows to be stored. To do a Take, change the output number in the output display, push the ENT/STA button to get the stored source information, and do a Take again. Repeat this procedure until all desired outputs are changed.

STORE BUTTON

When the Store button and any of the ten Recall buttons on the extended EP-1511 display are pushed together (both Store and Recall buttons at the same time), the data that is in the CP-1501 input and output display is stored into the internal entry table for that button. Subsequently, when only the Recall button is pressed (buttons 3-12 labeled 1-10), the output, input sources for that Recall button is loaded into the CP-1501.

Table 3-2 shows two other options available for the output number to be stored. If DIP Switch S2 bit 5 on the Logic card is on, the output number stored will be the output number in DIP Switch S2 on the Party Line Interface card. This is used for a single bus system.

RECALL BUTTON

When the Recall button and any one of the Take buttons are pressed together, the extended EP-1510 display will display the current video entry above the selected Take button. The CP-1501 display will also show the output, video and audio data for that Take button.

DIP SWITCH S2 FUNCTIONS
TABLE 3-6

DIP SW #	DESCRIPTION
	1 = ON = CLOSED, 0 = OFF = OPEN
(8) =	1 - One digit output # after category.
(7) =	1 - Use internal factory installed outputs for EP-1511 panel.
(6) =	1 - EP-1511 panel is entry only display.
	0 - EP-1511 panel is entry and auto status display.
(5) =	1 - EP-1511 outputs are output DIP switch #.
(3, 4)=	Number of EP-1511 panels in system (0-3). NOTE: Currently, only one EP-1510 is supported in download CP-1511A.
(2) =	1 - Look at tally signal for special outputs. (Not supported in download CP-1501/ 1511.)
(1) =	1 On powerup clear all RAM in system, otherwise, do a warm start.

If DIP Switch S2 bit 7 on the Logic card is on, the output number stored will come from the factory installed internal output table. Any undefined outputs in the internal output table can be defined as any legal output at the time the STORE button is pressed.

PAGE # BUTTON

The Page # button is used to see which of the 12 pages, 0 - 11, is currently being displayed. The panel defaults to page 0 on a cold start. Whenever the Page # and the Page/Take buttons are held down together, the current page number is decremented by one. The page number is incremented whenever only the Page/Take button is pressed. Note that the page number display must be gone before incrementing or decrementing the page number again.

ENABLE ALL BUTTON

When the Enable All button is held down along with the Page/Take button, all data on the current page is sent on the Party Line.

PAGE/TAKE BUTTON

When the Page/Take button is pushed while the Enable All button is pushed, all data on the current page is sent on the Party Line. If the Page/Take button is pushed alone, the current page number is incremented to the next page. If the Page # button is held down while the Page/Take button is pushed, the current page number is decremented.

EP-1511A OPERATION

Refer to the operation section covering the CP-1501 Control Panel. The EP-1511A with the extended display operates in the same manner as the CP-1501 except when any of the buttons on the EP-1511 panel are pressed. The extended display will display only the stored video entry or status for each of the ten Recall buttons. Refer to Table 3-6 for different option settings.

CP-1550 OPERATION

The CP-1550 Control Panel is used to control the Routing Switcher from a remote location by sending control signals to the switcher on the party line and receiving confirmation of the commands by party line. Confirmation is displayed on the unit front panel read outs.

Three lever switches on the front panel are used to select the machine category and machine number. The lever switches designate the source of the signal to the routing switcher and the switcher, in turn, sends the designated input signal to its output on receipt of a Take command from the control panel.

Nine source categories are selectable with the lever switch, along with a blank position. Each category has a possibility of up to 100 sources. However, a total of only 100 mnemonic inputs are possible with a standard switcher system. When the blank position of the category switch is selected, the numbers dialed in the remaining two switches specify the numeric source for the switch, allowing 100 possible sources for use with the routing switcher.

NOTE

Each position of the lever switches will result in a different mnemonic display in the category select readout. The mnemonic displays are customer specified and programmed by the factory for each order.

When a switcher input has been selected with the lever switches, and a switch signaled with the Take button, the Status readouts confirm the switch has taken place by displaying the confirmed input called for on the lever switches.

Pushbuttons marked *Vid* and *Aud* allow either video or audio-only switch to take place from the selected source on the Lever switches. The unit defaults to an Audio follows Video switch if neither button is operated. A Take switch sends the command to the routing switcher via the party line to make the switch and an audio/video status switch is provided to allow the operator to examine either the audio or video input status.

A LED indicator on the Take pushbutton signals the operator the switch has been confirmed, but is flashed if the machine number in the lever switches are changed from the current status. The indicators in the Audio and Video pushbutton switches show a split take is to be made. The *Vid* and *Aud* switches on the front panel are operated in a push-push mode, i.e., push-on, push-off. Indicators above the Override pushbuttons shown when a take has been made from one of the functions.

Four eight-wide DIP switches mounted on the Panel Interface card are used to specify the input number of the routing switcher associated with each Override Function switch. The number of the input is entered as a two digit BCD number, with each bank of switches read by the logic card when the corresponding front panel switch is operated.

The function selected by each Override switch is defined by the user at time of installation or may be later changed by setting the DIP switches labeled A-D with a new two-digit BCD number to designate the routing switcher input number.

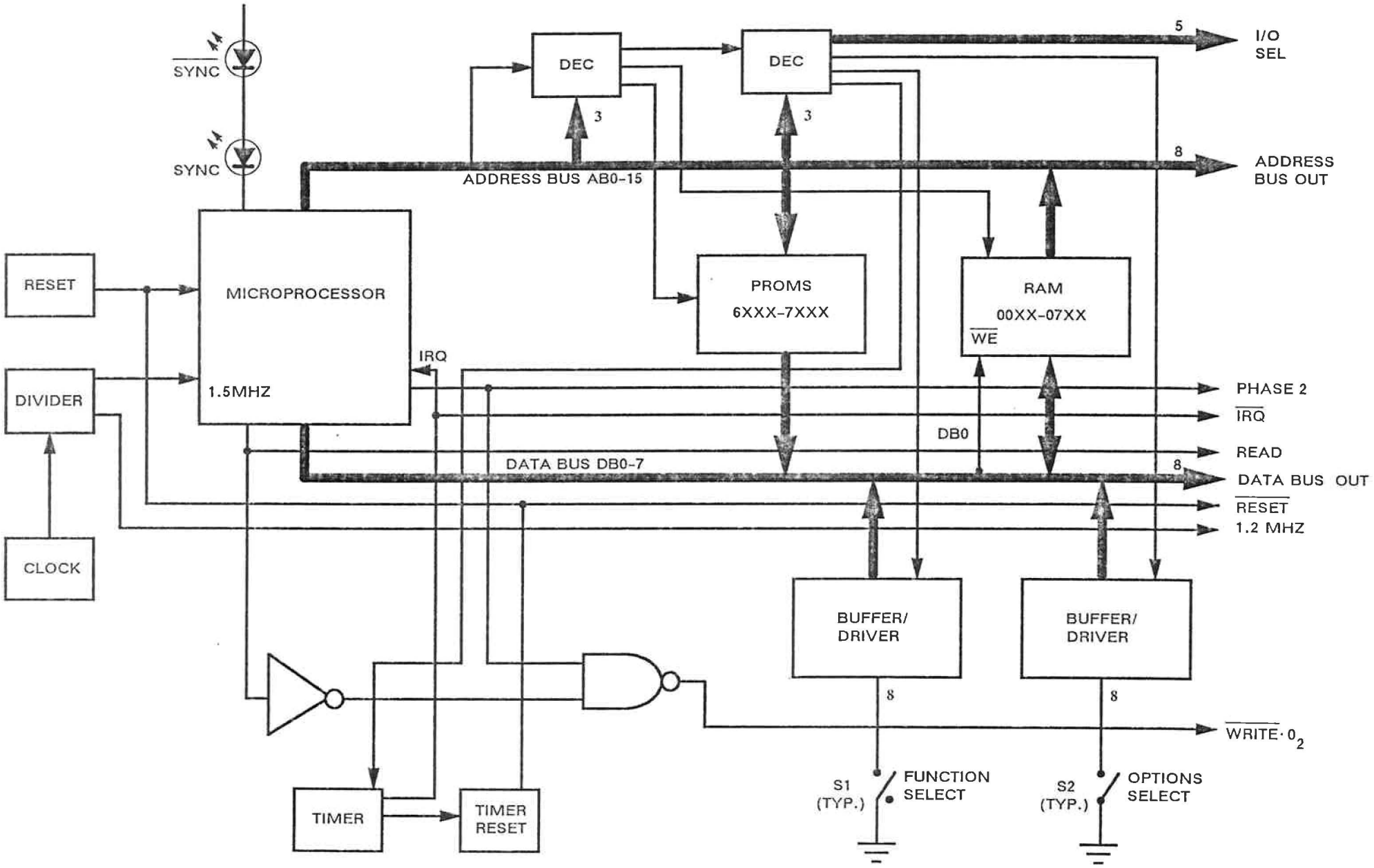

LOGIC CARD
BLOCK DIAGRAM
FIGURE 4-1

PANEL LOGIC CARD

GENERAL

During the following discussion, refer to the Drawings Section of the manual. The Electrical Schematic is 50-031800-000. Assembly Drawing, 01-031799-001 will serve as a valuable aid in location of circuit components discussed or for servicing the Panel Logic Card. Panel Logic Card Block Diagram, Figure 4-1, will also aid in under standing of the following discussion.

The Panel Logic Card is 65C02 microprocessor controlled card using two programmable Read Only Memories for storage of the operating software. Jumpers allow use of optional PROMs for software storage tailored to the system installation. Random Access Memory (RAM) is contained in one 2K x 8 chip addressed directly by the microprocessor. Two reset circuits protect the card operation against brown-outs, power failure and temporary software failures.

Since operation of the card is software and system dependent, only general circuit operation will be discussed. Understanding of board operation and operation of the card within the system will be a valuable aid in isolation of hardware and software problems.

CIRCUIT DESCRIPTION

INTERRUPTS

Time U8 is set to clock a low from Flip-flop U14A and cause the microprocessor to be interrupted about every 50 milliseconds. The low from the Q output is sent to one input of NAND Gate U11B. When the input is set low, the gate outputs a high to Inverter U10F that sets the microprocessor Interrupt (IRQ) input low. The interrupt causes the microprocessor to check the interrupting inputs to the data bus. If no interrupts are found, the microprocessor defaults to the timer and resets the interrupt by setting the Y0 output of I/O Decoder U13 low to the preset input of U14A. The low preset input forces the flip-flop to set its Q output high and turn off the interrupt.

The second input to the NAND gate is held high by Resistor R16 until it is pulled low from a card external to the logic card. The low on the second input of the gate causes the same interrupt action through the gate and inverter. If both inputs go low at the same time, the gate will also output a high that is inverted to interrupt the microprocessor. Interrupts are then serviced by the logic card in a priority determined by system software.

MEMORY CHIP SELECT

PROMs U5 and U6 and RAM memory U3 are enabled by a low from Decoder U12 for input or output of data. The microprocessor outputs an address that sets the AB15 line low and AB14 high. The low AB15 line is inverted to NAND Gate U11C and is combined with a high from the AB14 line to cause a low to be output to NAND gate U11D. This low pulls the Decoder G1 input of U12 high from the output of NAND Gate U11D.

At the same time, the address from the microprocessor on the AB11-AB13 address bus lines selects the output of U12 to enable either PROM or RAM. In addition to the memories, a low from the U12 Y2 output sets the G2A and G2B inputs to Decoder U13 low to allow I/O decoding.

The U12 Y0 output enables RAM Memories U3 and U4, while a low from the Y6 output enables PROM U6 and a low from the Y7 output enables U5.

65C02 MICROPROCESSOR

The 65C02 Microprocessor is the heart of the panel logic card and carries out functions as dictated by the operating software stored in the Programmable Read-Only Memory (PROM).

Most components are tied to the microprocessor either through the Address or Data Bus. The bi-directional data bus can transmit and receive

data information to or from the microprocessor. Circuits that support the microprocessor without communicating via the data or address bus include the Power-on Reset, 02 master clock, Interrupt Request Line (IRQ Not) and the Read/Write line.

The processor Ready and Non-Maskable Interrupt (NMI) lines are tied high. The sync line goes high whenever the processor is doing an OP CODE fetch and stays high for the remainder of that cycle. LEDs DS1 and DS2 are switched by Q2 and Q3 to indicate the state of the sync output. For normal operations, both LEDs will appear to be on. When the sync output is high, DS2 will be on.

When power is applied to the unit and the reset circuit, the power-on reset circuit provides a momentary low to the reset input of the microprocessor. The microprocessor is initialized by the reset circuit to bring it to a known point to restart programming and operations. The reset pulse must be of sufficient duration to insure that all power supplies are up and stabilized and all peripherals are reset. The logic card then delays 6 cycles after removal of the reset before beginning operation.

The phase 02 master clock is used by the microprocessor to time operations and is also used as part of the memory Read/Write Not line. The microprocessor R/W Not output line is combined with the clock line by NAND Gate U11A to pulse the R/W Not line to the RAM memories (Read/ Write 02 Not).

RESET

The reset circuit provides a low pulse to the reset input of the microprocessor to force it to start at a known point in the operating program with the internal registers initialized. The reset pulse must be long enough to allow the power supply to stabilize at power up or after a power bump. The circuitry around Transistor Q1 operates to provide a power-on reset pulse.

Timer U9 is also used to provide a reset pulse from Transistor Q4 about 50 milliseconds after the normal timer interrupt from U8 through U14A has been sent to the microprocessor. The time-out reset is provided to allow a reset in case the normal timer interrupt has not been serviced by the microprocessor during the 50 msec period. The only time that a time-out reset is sent to the microprocessor is is the case of soft ware or other trouble that prevents the logic card from servicing the timer interrupt and resetting Flip-flop U14A. A third reset circuit located on the panel party line interface card can also send a reset pulse to the microprocessor.

At initial power up, the voltage on the base of Transistor Q1 is equal to the 5 volt power supply to turn on Transistor Q1. The transistor pulls the reset line to the microprocessor low and prevents Capacitor C2 from charging. As Capacitor C1 begins to charge, the voltage on the base of Q1 from Divider Resistor Junction R1-R2 drops until it reaches a value that allows Q1 to turn off. When Q1 turns off, C2 begins to charge until it reaches the level of the 5 volt supply though R3 and R4. The R-C time constant, R3-R4-C2 and R1-R2-C1, determines the length of time required to return the reset input of U2 high.

Time-out Reset

Timer U9 and Transistor Q4 comprise the Time-out Reset circuit, along with R14, R15, C4 and Diode CR2. Timer U8 is set to output a pulse about 50 milliseconds in width by the R-C combination R12, R13 and C3. The timer output clocks Flip-flop U14A to output a low to NAND Gate 11B. The low causes the gate to output a high that is inverted by U10F and tied to the microprocessor interrupt input.

When the Q output of Flip-flop U14A is set low, the high at the Q Not output enables Timer U9 to run. The timer is set by components R14, R15 and C4 to output a pulse width of about 50 milliseconds. When the pulse goes low, Transistor Q4 is turned on to set the junction of R3-R4 in the power-on reset circuit low and discharge C2 to reset the microprocessor.

MASTER CLOCK

The master clock signal frequency of 6.144MHz is generated by oscillator Y1, U10B and C and

divided by two by Counter U15. The signal QA output is divided by 2 by Flip-flop U14B and entered at the microprocessor input. The oscillator signals is also divided by 5 at the QC output of U15 for a 1.228MHz clock signal to the external Baud Rate Generator.

The phase 02 (out) clock signal from the microprocessor is tied to one input of NAND Gate U11A and is combined with the inverted Read/ Write Not line from the microprocessor to RAM and the Party Line Interface card. The output of NAND gate U11A is also connected to the Write Enable Input of RAM chip U3 to enable the tri-state outputs during a read allowing data to be placed on the data bus.

INTERRUPT TIMER

The Interrupt Timer generates an interrupt request to the microprocessor approximately every 50 microseconds. The timer interrupt is cleared by a low to the preset input of Flip-flop U14A from the Decoder U13 I/O output to set the Q output high. The clear address of the timer is 5000. The Q output is tied to Reset Timer U9 through Diode CR2 to enable the reset time-out cycle. (See Reset Section.)

BOARD FUNCTION REGISTERS

Switch Registers S1 and S2 allow unique data to be placed onto the data bus for software use. The registers allow use of special audio and video functions in connection with the Routing Switcher such as audio follows video, audio/video only, etc. An address from the microprocessor to Decoder U13 sets the Y1 output low. The low enables the Schmitt trigger buffer/drives of U1 to output the function data that has been set in the switch register. A low from Output Y2 allows the microprocessor to read the value set in Optional Register S2.

The phase 02 (out) clock signal from the micro processor is tied to one input of NAND Gate U11A and is combined with the inverted Read/ Write Not line from the microprocessor to RAM and the Party Line Interface card. The output of NAND gate U11A is also connected to the Write Enable Input of RAM chips U3 to enable the tri-state outputs during a read allowing data to be placed on the data bus.

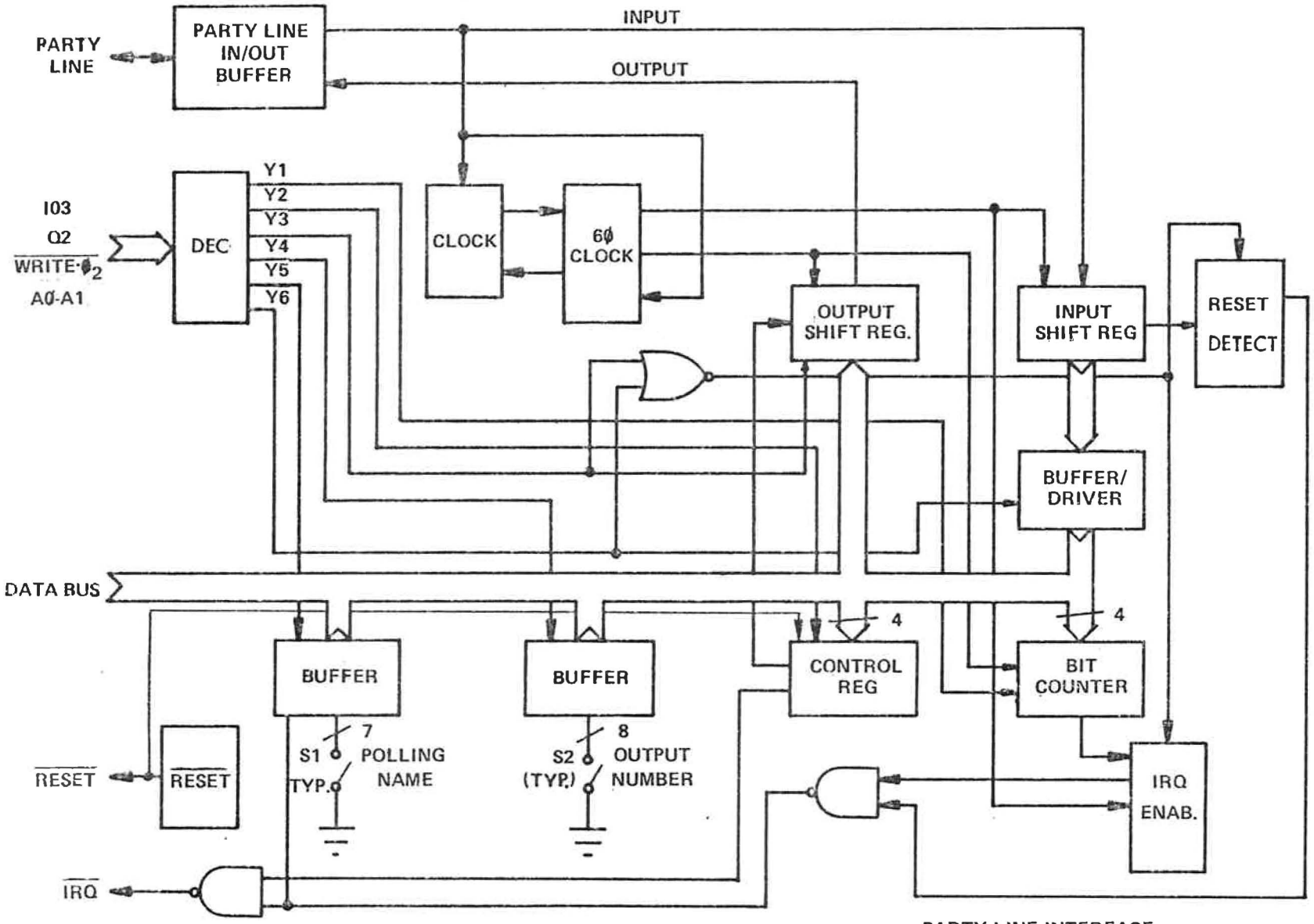

PARTY LINE INTERFACE
BLOCK DIAGRAM
FIGURE 4-2

PARTY LINE INTERFACE CARD

GENERAL

The Electrical Schematic for the Party Line Interface card is 50-026955-000 and is contained in Section 7 of this manual. The Assembly drawing 01-026945-001, is also in the Drawing Section of the manual. Both drawings, along with card Block Diagram, Figure 4-2, will aid in understanding the following discussion.

OVERVIEW

The Party Line Interface card connects the control panel unit to the party line for control of switcher functions and is a means for returning status of machines under switcher control to the unit for display.

The interface receives commands from the logic card data bus for transmission on the party line and generates interrupts to the logic card when status data is received from the party line.

A card clock controls receive and transmit timing, along with other card functions. Bits received and transmitted are counted and status of board functions is returned to the logic card by the data bus.

A reset circuit re-initializes the operation of the card in case of power failure or brownout.

CIRCUIT DESCRIPTION

CARD CLOCK

Timer U11 and Shift Register U15 along with associated logic comprise the card clock. The clock begins the count on receipt of a low start bit from the output of Q4. The low causes NAND Gate U12C to remove the low at the reset input of U11 and allows it to output pulses with a 10 - 12 microsecond period.

The start of the clock shifts a high from serial input of Shift Register U15 to each output in turn. When the stop bit is received by U12C, the low is restored to the reset input of U11 and the clock stopped after five complete clock cycles and a portion of the sixth. When the clock stops, the Q_B, C, D and E outputs are high. The next start bit from the party line starts the clock by removing the reset input low and sets the Q_F output high. The high is inverted by U13D to put a low at the second input to U12C and prevent the reset input of U11 from going low. At the start of the clock, the Q_B input is set low causing a high to be output by U3B back to the shift register input to start the register shift cycle again. the cycles continue in this manner until a low (hold) is put on the party line at the end of the current data. At this time, the Q_B, Q_C, Q_D and Q_E inputs are left high and the Q_F output low until the next data start bit arrives from the party line.

PARTY LINE INPUT AMPLIFIER

Party line is applied to the base of Tran sistor Q2. Q2 and Q3 along with Resistors R1 and R5 function as a Schmitt trigger which reproduces the party line pulses by changing state (output shifting from a LOW to a HIGH or HIGH to LOW) once a thresholdvoltage is reached by descending or ascend ing input voltage transition. The threshold voltage is close to +2.5 volts for both neg ative and positive going input voltage tran sitions. The threshold voltage eliminates most noise spikes from the party line. The "clean" party line is applied to the base of Q4, which inverts the party line so that the data phase of each party line bit cycle equates to the TTL equivalent of the party line bit.

PARTY LINE BUS INPUT

Inverted party line data from the collector of Q4 is entered at the serial input to Reg ister 10. The start bit high is sent from the input line to NAND Gate U12C to remove the low from the reset input of Timer U11 and start the card clock.

Pulses from Clock Shift Register U15 QB output line clock the data into the U10 to the parallel outputs. The parallel data is entered onto the data bus by Buffer/Driver U5 on receipt of a low at the output control inputs from the Y7 output of Decoder U1. The decoder is enabled by the high from the Phase 2 logic card clock output line and a low the the IO3 line.

RESET MONITOR AND INTERRUPT

Eight-input NAND Gate U9 monitors party line data at the outputs of Shift Register U10 for the FF reset code. When the code is received, the output of U9 goes low to the D input of Flip-flop U14B.

When the D input of the flip-flop goes low, the low is clocked by the QC output of U15 and sets the Q output of U14B low. The low is tied to one input of NAND Gate U12B. This low input causes a high output to NAND Gate U12A. When the Q2 output of Latch U6 is set high, U12A outputs a low to signal the interrupt to the logic card.

Flip-flop U14B is cleared by the micropro cessor either reading from Input Driver U5 or writing out to the party line output Shift Register U2. To read the input driver, the Y6 output of Decoder U1 is set low. To load the output shift register, the Y2 output of U1 is set low by the microprocessor.

When the microprocessor does a read of U5 or write to U2, the low from Decoder U1 is also tied to one input of NAND Gate U12D and causes the gate output to go high. The high is inverted by U13F and sets the flip-flop present input low, restoring the Q output high and clearing the interrupt by setting the output of U12B low and U12A high. The low at the flip-flop present input is also sent to the preset input of bit count inter rupt Flip-flop U14A.

BIT COUNTER AND INTERRUPT

Counter U4 is used by the microprocessor to record the number of data bits to input or output and set the count interrupt from the borrow output when the party line byte transmission is complete. When the party line transmit or receive operation is started, the microprocessor presets the counter inputs with the number of data words to be transmitted or received. As the data is moved on or off of the party line, the counter is decremented by clock pulses from the QC output of U15.

When the counter reaches zero, the borrow output is set low. The low is tied to the D input of Flip-flop U14A. The U15 QC output clocks Flip-flop U14A to set the Q output low to NAND Gate U12B. The low from Flip flop U14A causes a high output at U12B. This high generates an interrupt at U12A as described in the reset interrupt section. This interrupt is cleared by a low preset input to U14A.

CONTROL REGISTER

Control Register U6 is initialized by the micro-processor Reset Not at the beginning of the program. The microprocessor sets data bus line D7 high and the level is clocked to the Q output by a low from the Y0 output of Decoder U1. When a reset code is detected by U9 or the counter reaches zero, the high from the control register is combined with a high from Flip-flops U14A or B by NAND Gates U12B and A to signal on interrupt to the microprocessor.

When the microprocessor is to perform an output to party line, the Data Bus D6 line is set high and the high latched into the register by a low from the Y0 output of U1. The high from the Register Q3 output allows data to be sent to the party line by enabling NAND Gate U3A at the output of party line output Shift Register U13A.

The control register is cleared at power on or in case of a brownout by the low from the micro-processor Reset Not line to the Clear Not input and cleared again only when required by software.

PARTY LINE OUTPUT

Data from the microprocessor in reply to front panel commands is transmitted to the party line from the data bus after being converted to serial form by Shift Register U2. Data from the bus is

entered into the shift register by a low to the Load Not input from Y2 output of Seleco U1. Data is shifted out of U2 on the Low-to-High clock transition. Data at the QH output of U2 is combined by U3A with the inverted clock signal from U13B and a high from the Q3 output of Register U6. The output of U3A is inverted by U13A and tied to the base of Q1. The transistor is turned on to set the party line low during the data bit portion of the party line output cycle initiated by the party line polling card. Transmitted party line data is monitored by party line Input Amplifier Q2, Q3 and Q4 for clock control.

RESET

The Reset Not function forces the micropro cessor to a known state in case of power brown-out or momentary interruption and also initializes the logic card when the unit is first turned on.

At power up, the base of Transistor Q5 is pulled up to the unregulated supply value by the 10uF Capacitor C2. The base of Q5 then discharges to a value of +4.3 volts. The unregulated voltage charges the 10uF capacitor to a rate determined by the R-C time constant of R13 and C2. When the capac itor is charged, the transistor turns on to pull the base of Q6 high and turn it off. Charging of C2 keeps the Reset Not low long enough to allow the microprocessor and per ipherals to intialize before being allowed to run.

When the voltage from the unregulated power supply drops below a threshold value set by Diodes CR1-CR3 and Transistor Q5, the tran sistor turns off. This sets the base of Transistor Q6 low to turn it on, pulling the Reset Not line to the microprocessor low. When the unregulated voltage level goes back up, Q5 is turned on and pulls the base of Q6 high, turning Q6 off and allowing the Reset Not line to go high. The time constant set by R13 and the 10uF capacitor determines the time that will elapse before Q5 turns on. Diode CR4 prevents the voltage on the base of Q5 from going negative.

POLLING NAME AND OUTPUT NUMBER

Buffer/Drivers U7 and U8 are used to pass data from Switch REgister S1 and S2 toprovide the polling name and output number to the logic card.

The polling name from Switch Register S1 is compared with the polling name data from party line by the logic card to determine if the party line data is being sent to the unit or to another unit on the party line. The output number from Switch Register S2 is transmitted by the unit each time a Take command is sent on party line to tell the routing switcher which output to send the signal called for by the control panel.

Polling name Buffer/Driver U7 is enabled by logic card selection of the Y4 output of Selector U1, while output number Buffer U8 is enabled to put data on the data bus by selection of the Y5 output of U1.

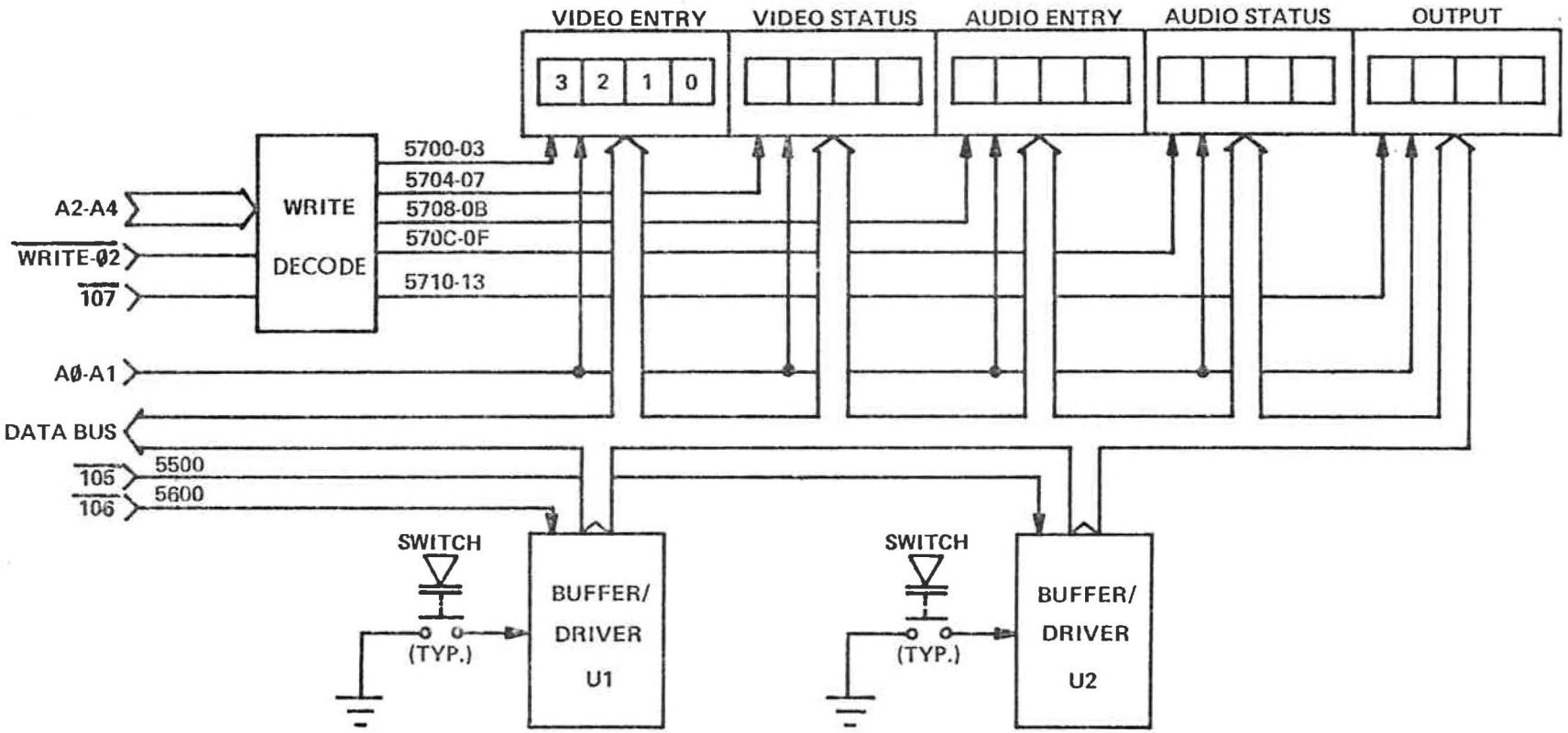

DISPLAY AND KEYBOARD CARD
CP-1500
BLOCK DIAGRAM
FIGURE 4-3

CP-1500
DISPLAY AND KEYBOARD CARD

GENERAL

During the following discussion, refer to the Drawings Section of this manual. The Electrical Schematic Diagram is 50-026971-000 and the Assembly Drawing is 01-026970-001. The drawings will serve as aids in under standing the circuit operation and in loca tion of components mentioned. Block Diagram, Figure 4-3, will also aid in understanding of card operation.

OVERVIEW

The Display and Keyboard card is used in the CP-1500 Control Panel along with the Logic Card and Party Line Interface cards. The card provides alphanumeric readout of Out put, Audio and Video entry and status data, along with circuitry to interface control ling pushbuttons to the data bus for trans fer to the the logic card.

Status data from the logic card is received by the card on the data bus and sent to the readouts under control of Address Bus lines A0 - A4. Pushbutton data is read onto the bus from buffer/drivers enabled by Logic Card I/O Device Select lines IO5 Not and IO6 Not.

CIRCUIT DESCRIPTION

DATA OUTPUT

Alphanumeric characters in ASCII 7-bit code are output by the logic card on the data bus lines for display by the readouts. One out put of Decoder U3 is set low by an address from Address Bus lines A2 - A4 and combined with a 0-3 code from Address Bus lines A0 - A1 to select the character position within each readout. Addresses for each decoder output are as follows:

Selector Output	Address
Y0	5700-03
Y1	5704-07
Y2	5708-0B
Y3	570C-0F
Y4	5710-13

In addition to the address, G2A and G2B in puts to U3 are set low from the Write .02 Not and the IO7 Not lines by the logic card.

DATA INPUT

To detect operation of a pushbutton, the logic card sets the IO6 Not line low with an address of 5600 to the Input/Output Device Selector of the logic card. This line sets the enable input to Buffer/Driver U1 Low. If a pushbutton has been operated, the low from the pushbutton input to U1 will be inverted and transferred to the corresponding data bus line to be read by the logic card. To perform a read of Buffer/Driver U2, the IO5 Not line from the logic card is set low with a 5500 address to the logic card I/O Device Selector.

Optional Pushbutton

Pushbutton S3 (Change Output) is optional in CP-1500 Control Panels. If not included, the output value is read from the DIP switch mounted on the Party Line Interface card, and is not changeable from the front panel.

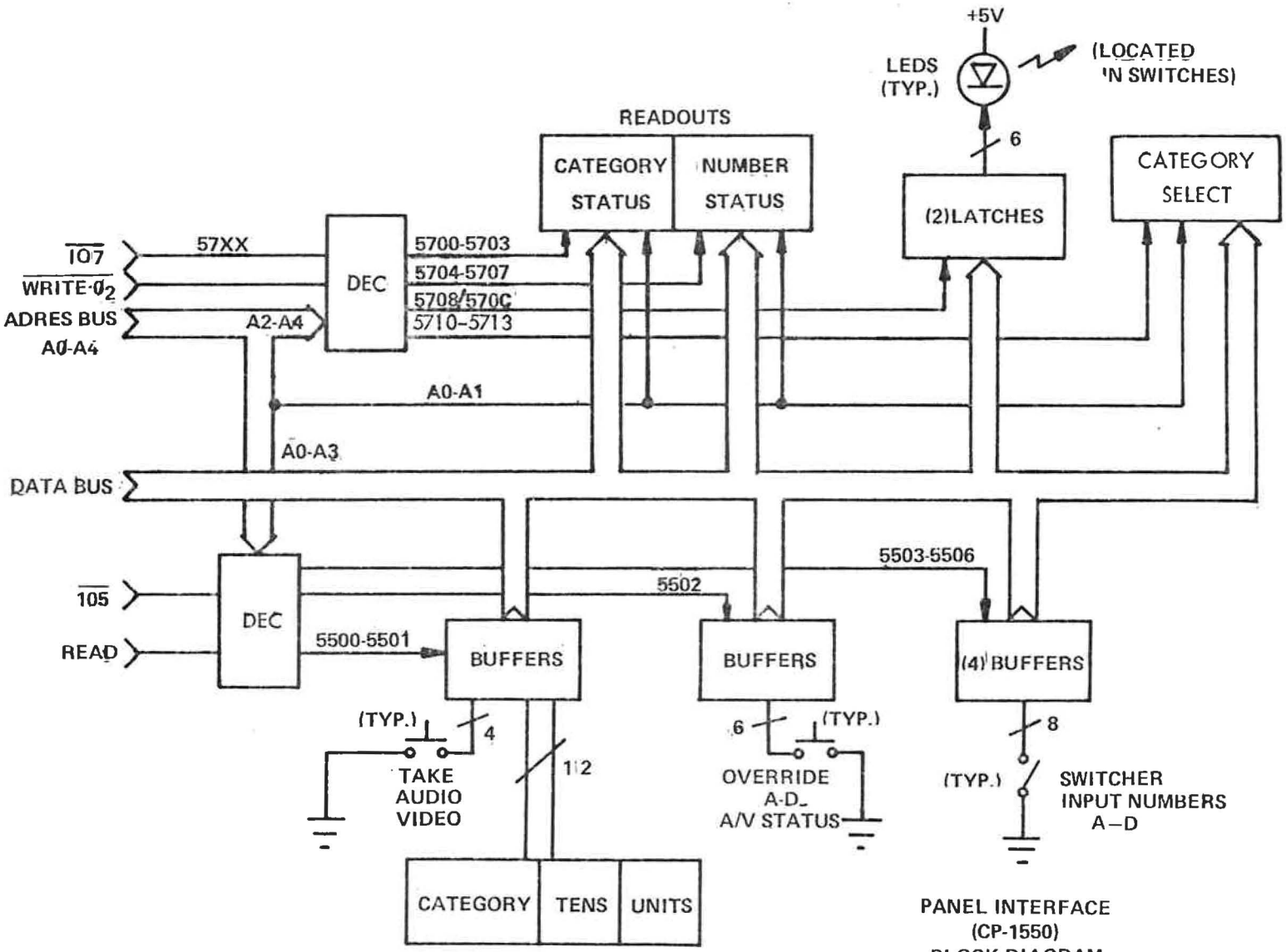

PANEL INTERFACE
(CP-1550)
BLOCK DIAGRAM
FIGURE 4-4

CP-1550
PANEL INTERFACE CARDS

GENERAL

The Panel Interface for the CP-1550 Control Panel consists of three cards; the Panel Interface card, the Display and Take card and the Enter card. the Assembly and Electrical Schematic Drawings for the cards are contained in Section 7 of the manual. The Assembly Drawing for the card is 01-026947- 001 and the Electrical Schematic Drawing is 50-026957-000. The Display and Take card and the Enter card are peripherals of the Panel Interface card and will be included in the following discussion. The Assembly and Electrical Schematic Diagrams should be referred to during the following discussion, along with Block Diagram, Figure 4-4, for a better understanding of system and circuit operation.

OVERVIEW

The Panel Interface card provides an inter face between the pushbuttons and lever switches of the unit front panel and the panel logic card. It also reads status data back from the logic card to the front panel readouts to confirm action taken by the routing switcher after a command has been sent from the front panel. The pushbuttons, lever switches and internal DIP switches are read when the logic card addresses a selector on the card with 55XX, with the 55 enabling the read decoder and the last two numbers of the address selecting one of seven buffer/ driver chips for relay of data from the switches to the data bus and logic card.

The three lever switches of the front panel are used to select the machine category for the switch, and the number of the machine. The A and V pushbuttons allow either video or audio only switch to take place from the selected source on the lever switches. The unit defaults to an audio follows video switch if neither button is operated. A Take switch signals the logic card to command the routing switcher via the party line to make the switch and audio/video status switch is provided to allow the operator to examine either the audio or video input status.

When the logic card sets the Write line low and outputs a 57XX address to another selector on the card, the number and category status readouts are enabled and data from the data bus is passed to the readouts. Two of the decoder outputs are connected to latches to allow data from the data bus to select a particular LED indicator on the front panel. A LED indicator on the Take pushbutton signals the operator the switch has been confirmed, but is flashed if the machine number in the Lever switches is invalid. The LED goes out when the lever switches are changed from current status. The indicators in the Audio and Video push button switches indicate which function has been selected. Indicators above the Override pushbuttons show a Take has been made by operation of that button. The A and V switches on the front panel are operated in a push-push mode, i.e., push-on, push-off.

When a switcher input has been selected with the lever switches, and a switch signaled with the Take button, the status readouts confirm the switch has taken place by displaying the confirmed input called for on the lever switches.

Nine source categories are selectable with the lever switch, along with a blank position. Each category has a possibility of up to 100 sources. However, a total of only 100 mnemonic inputs are possible with a standard switcher system. When the blank position of the category switch is selected, the numbers dialed in the remaining two switches specify the numeric source for the switch, allowing the 100 possible sources for use with the routing switcher to be selected by number.

NOTE

Each position of the lever switches will result in a different mnemonic display in the Category Select readout. The mnemonic displays are customer specified and custom programmed by the factory for each order.

Four eight-wide DIP switches mounted on the Panel Interface card are used to specify the input number of the routing switcher associated with each Override function switch. The number of the input is entered as a two-digit BCD number, with each blank of switches read by the logic card when the corresponding front panel switch is operated.

CIRCUIT DESCRIPTION

READ FUNCTIONS

To rapidly pick up any change in the switches from the front panel, the logic card polls the lever switch inputs until a Take or Override switch contact closure signals a command.

To perform a read of the switch inputs, the logic card sets address 55XX on the address bus lines to set the G2A and G2B inputs of Decoder U3 low. With the read line set high, the address bits from Address Bus lines A0 – A2 are set to address XX00 to select output 0 enabling Buffer/Driver U4. Address XX01 selects Output 1 enabling U5 or Address XX02 to enable U10 from Output 2.

If a low is present on the line from the Take switch into U4, the Take pushbutton has been operated and the low is transferred to the data bus when polled by the logic card and is used by the logic card to initiate a party line command to the switcher.

If the logic card reads a take from the Take switch, the remaining outputs of U4 and all of the outputs of U5 are read fro the BCD value from the lever switch register. The value gives the logic card the information to generate the routing switcher input source number. Along with the BCD value from the lever switches, the low from the Audio and/or Video only switches is read onto the data bus for the additional switching instructions to the routing switcher.

If a low is read from U10 caused by an Over ride switch, the logic card under software control determines which Override switch was operated and performs a read of the corresponding on-card DIP switch register to pick up the routing switcher input number. An immediate audio follows video take to this input number is generated.

The function selected by each Override switch is defined by the user at time of installation or may be later changed by setting the DIP switches labeled A-D with a new two-digit BCD number to designate the routing switcher input number.

If a low from the Audio/Video Status switch is read by the logic card from Buffer U10, the logic card performs a Write to the category and number readouts to reflect the latest switcher status confirmed by the routing switcher. Video status is normally displayed. Audio status is displayed only while the A/V switch is held closed.

WRITE FUNCTIONS

To perform a Write function to the category and number readouts or to the LED switch indicators, the logic card sets 57XX on the address bus setting the IO7 line and Wrote 0.2 line low to the G2A Not and G2B Not inputs of Decoder U2. Address 5700 and 5703 sets the decoder output 0 low enabling category status readout to display the contents of data bus lines D0-D6, for each address selected by the A0-A1 address bus lines to each readout section.

Address 5704-5707, sets the decoder output 1 line low to be combined with the A0-A1 address bus lines to enable the number status readout.

RESET

The reset line from the logic card is used as an initial clear line to Latches U11 and U1 that control the LED indicators. When the unit is powered up, the latches are cleared to turn on the LEDs. The software initialization the turns off the LEDs.

PANEL LOGIC CARD

(Formerly-used)

GENERAL

The Panel Logic card for the CP-1500 Series control panels has been redesigned to incorporate new engineering features. Refer to page 4-1. This section describes the formerly-used control logic card.

During the following discussion, refer to the Drawings Section of the manual. The Electrical Schematic is 50-026956-000. Assembly Drawing, 01-026946-001 will serve as a valuable aid in location of circuit components discussed or for servicing the Panel Logic Card. Panel Logic Card Block Diagram, Figure 4-5, will also aid in under standing of the following discussion.

OVERVIEW

The Panel Logic Card is 6502 microprocessor controlled card using two programmable Read Only Memories for storage of the operating software. Jumpers allow use of optional PROMs for software storage tailored to the system installation. Random Access Memory (RAM) is contained in two 1K chips addressed directly by the microprocessor. Two reset circuits protect the card operation against brown-outs, power failure and temporary software failures.

Since operation of the card is software and system dependent, only general circuit operation will be discussed. Understanding of board operation and operation of the card within the system will be a valuable aid in isolation of hardware and software problems.

CIRCUIT DESCRIPTION

INTERRUPTS

Time U8 is set to clock a low from Flip-flop U14A and cause the microprocessor to be interrupted about every 50 milliseconds. The low from the Q output is sent to one input of NAND Gate U11B. When the input is set low, the gate outputs a high to Inverter U10F that sets the microprocessor Interrupt (IRQ) input low. The interrupt causes the microprocessor to check the interrupting inputs to the data bus. If no interrupts are found, the microprocessor defaults to the timer and resets the interrupt by setting the Y0 output of I/O Decoder U13 low to the preset input of U14A. The low preset input forces the flip-flop to set its Q output high and turn off the interrupt.

The second input to the NAND gate is held high by Resistor R16 until it is pulled low from a card external to the logic card. The low on the second input of the gate causes the same interrupt action through the gate and inverter. If both inputs go low at the same time, the gate will also output a high that is inverted to interrupt the microprocessor. Interrupts are then serviced by the logic card in a priority determined by system software.

MEMORY CHIP SELECT

PROMs U5 and U6 and RAM memories U3 and U4 are enabled by a low from Decoder U12 for input or output of data. The microprocessor outputs an address that sets the AB15 line low and AB14 high. The low AB15 line is inverted to NAND Gate U11C and is combined with a high from the AB14 line to cause a low to be output to NAND gate U11D. This low pulls the Decoder G1 input of U12 high from the output of NAND Gate U11D.

At the same time, the address from the microprocessor on the AB11-AB13 address bus lines selects the output of U12 to enable either PROM or RAM. In addition to the memories, a low from the U12 Y2 output sets the G2A and G2B inputs to Decoder U13 low to allow I/O decoding.

The U12 Y0 output enables RAM Memories U3 and U4, while a low from the Y6 output enables PROM U6 and a low from the Y7 output enables U5.

6502A MICROPROCESSOR

The 6502A Microprocessor is the heart of the panel logic card and carries out functions as dictated by the operating of U12 to enable either PROM or RAM. In addition to the memories, a low from the U12 Y2 output sets the G2A and G2B inputs to Decoder U13 low to allow I/O decoding.

The U12 Y0 output enables RAM Memories U3 and U4, while a low from the Y6 output enables PROM U6 and a low from the Y7 output enables U5.

6502 MICROPROCESSOR

The 6502 Microprocessor is the heart of the panel logic card and carries out functions as dictated by the operating software stored in the Programmable Read-Only Memory (PROM). Most components are tied to the microprocessor either through the Address or Data Bus. The bi-directional data bus can transmit and receive data information to or from the microprocessor. Circuits that support the microprocessor without communicating via the data or address bus include the Power-on Reset, 02 master clock, Interrupt Request Line (IRQ Not) and the Read/Write line.

The processor Ready and Non-Maskable Interrupt (NMI) lines are tied high. The sync line goes high whenever the processor is doing an OP CODE fetch and stays high for the remainder of that cycle. LEDs DS1 and DS2 are switched by Q2 and Q3 to indicate the state of the sync output. For normal operations, both LEDs will appear to be on. When the sync output is high, DS2 will be on.

When power is applied to the unit and the reset circuit, the power-on reset circuit provides a momentary low to the reset input of the microprocessor. The microprocessor is initialized by the reset circuit to bring it to a known point to restart programming and operations. The reset pulse must be of sufficient duration to insure that all power supplies are up and stabilized and all peripherals are reset. The logic card then delays 6 cycles after removal of the reset before beginning operation.

The 02 master clock is used by the microprocessor to time operations and is also used as part of the memory Read/Write Not line. The microprocessor R/W Not output line is combined with the clock line by NAND Gate U11A to pulse the R/W Not line to the RAM memories (Read/Write .02 Not).

RESET

The reset circuit provides a low pulse to the reset input of the microprocessor to force it to start at a known point in the operating program with the internal registers initialized. The reset pulse must be long enough to allow the power supply to stabilize at power up or after a power bump. The circuitry around Transistor Q1 operates to provide a power-on reset pulse.

Timer U9 is also used to provide a reset pulse from Transistor Q4 about 50 milliseconds after the normal timer interrupt from U8 through U14A has been sent to the microprocessor. The time-out reset is provided to allow a reset in case the normal timer interrupt has not been serviced by the microprocessor during the 50ms period. The only time that a time-out reset is sent to the microprocessor is is the case of soft ware or other trouble that prevents the logic card from servicing the timer interrupt and resetting Flip-flop U14A. A third reset circuit located on the panel party line interface card can also send a reset pulse to the microprocessor.

At initial power up, the voltage on the base of Transistor Q1 is equal to the 5 volt power supply to turn on Transistor Q1. The transistor pulls the reset line to the microprocessor low and prevents Capacitor C2 from charging. As Capacitor C1 begins to charge, the voltage on the base of Q1 from Divider Resistor Junction R1-R2 drops until it reaches a value that allows Q1 to turn off. When Q1 turns off, C2 begins to charge until it reaches the level of the 5 volt supply though R3 and R4. The R-C time constant, R3-R4-C2 and R1-R2-C1, determines the length of time required to return the reset input of U2 high.

Time-out Reset

Timer U9 and Transistor Q4 comprise the time-out reset circuit, along with R14, R15, C4 and Diode CR2.

Timer U9 and Transistor Q4 comprise the Time-out Reset circuit, along with R14, R15, C4 and Diode CR2. Timer U8 is set to output a pulse about 50 milliseconds in width by the R-C combination R12, R13 and C3. The timer output clocks Flip-flop U14A to output a low to NAND Gate 11B. The low causes the gate to output a high that is inverted by U10F and tied to the microprocessor interrupt input.

When the Q output of Flip-flop U14A is set low, the high at the Q Not output enables Timer U9 to run. The timer is set by components R14, R15 and C4 to output a pulse width of about 50 milliseconds. When the pulse goes low, Transistor Q4 is turned on to set the junction of R3-R4 in the power-on reset circuit low and discharge C2 to reset the microprocessor.

MASTER CLOCK

The master clock signal frequency of 6.144MHz is generated by oscillator Y1, U10B and C and divided by two by Counter U15. The signal QA output is divided by 2 by Flip-flop U14B and entered at the microprocessor input. The oscillator signals is also divided by 5 at the Q output of U15 for a 1.228MHz clock signal to the external Baud Rate Generator.

The 02 (out) clock signal from the micro processor is tied to one input of NAND Gate U11A and is combined with the inverted Read/ Write Not line from the microprocessor to RAM and the Party Line Interface card. The output of NAND gate U11A is also connnected to the Write Enable Input of RAM chips U3 and U4 to enable the tri-state outputs during a read allowing data to be placed on the data bus.

INTERRUPT TIMER

The Interrupt Timer generates an interrupt request to the microprocessor approximately every 50 microseconds. The timer interrupt is cleared by a low to the preset input of Flip-flop U14A from the Decoder U13 I/O output to set the Q output high. The clear address of the timer is 5000. The Q output is tied to Reset Timer U9 through Diode CR2 to enable the reset time-out cycle. (See Reset Section.)

BOARD FUNCTION REGISTERS

Switch Registers S1 and S2 allow unique data to be placed onto the data bus for software use. The registers allow use of special audio and video functions in connection with the Routing Switcher such as audio follows video, audio/video only, etc. An address from the microprocessor to Decoder U13 sets type Y1 output low. The low enables the Schmitt trigger buffer/drives of U1 to output the function data that has been set in the switch register. A low from Output Y2 allows the microprocessor to read the value set in Optional Register S2. (See Section 3, CP-1500 Operation.)

Data to illuminate the LED indicators in the switches is latched into U11 and U1 with Address 5708 to enable U11 from Output 2 of Decoder U2 AND Address 570C to enable U1 from Output 3 of Decoder U2. Address 5710 - 5713 sets the decoder output 4 line low. This low combined with the A0-A1 address bus lines, enables the category select readout.

MAINTENANCE

GENERAL

The following information covers general maintenance procedures for the CP-1500 Series Control Panels.

ROUTINE MAINTENANCE

Because of the intrinsic stability, no routine maintenance is required throughout the service life of the equipment. The units are calibrated at the factory.

RECOMMENDED TEST EQUIPMENT

Where specific test equipment is recommended, substitute equipment may be used if its characteristics are equal to or superior to those of the equipment specified. The equipment specified must be calibrated to be within manufacturer's specifications.

Oscilloscope, Hewlett-Packard 1742 or other 50MHz bandwidth oscilloscope.

Voltmeter, Simpson 260 or Digital Voltmeter, Fluke, type 800A.

CORRECTIVE MAINTENANCE

During the removal and replacement of a faulty component, observe the following precautions:

NOTE
FAILURE TO OBSERVE THESE PRECAUTIONS MAY VOID THE WARRANTY.

1. Turn power off when removing or installing the printed circuit cards.

2. DO NOT remove or replace regulators or other circuit components with power on the printed circuit cards.

3. Remove transistors from the circuitry before making ohmmeter checks.

4. When soldering to the printed circuit card, use a minimum amount of solder to ensure a good bond. Excessive amount of heat may damage the copper-to-epoxy-card bond.

5. Be sure to observe electrolytic capacitor polarities.

6. When removing a component from the card, use a fast solder-removal tool, such as a suction device, to avoid contact of the hot soldering iron to the card any longer than necessary.

PERFORMANCE CHECKS

After the warranty period has expired, only individuals knowledgeable in servicing of electronic equipment should attempt repairs. Schematic and Assembly Drawings are contained in the Drawings section as an aid in locating IC chips and circuitry explained in the Circuit Description Section.

A Spare Parts Kit will also be helpful in maintaining the unit in top operating condition. The kit is available from the factory.

MOS CHIPS

CAUTION

DAMAGE to MOS chips from static electricity occurs when the special handling precautions are not followed! **FAILURE TO FOLLOW THE PROCEDURES MAY VOID THE WARRANTY.**

TROUBLESHOOTING

If problems are experienced, it is suggested that the following voltages be first checked:

1. Unregulated +9VDC at (+) lead of capacitor C4 of power supply.

2. Regulated +5 VDC at (+) lead of capacitor C5 on Logic Card.

3. Regulated +5 VDC at (+) lead of capacitor C3 or C4 on Party Line Interface Card.

4. Regulated +5 VDC at (+) lead of capacitor C1 – C5 on the Panel Interface Card.

If the unregulated voltage has excessive AC ripple, check power supply capacitors and bridge rectifier

If regulated +5 VDC measures more than +10% of that value, replace Voltage Regulator VR1.

The logic card clock oscillator, 6.144 MHz, frequency should be checked with a frequency counter at pin 37 of Microprocessor, U2 for a frequency of 1.536 MHz. Pin 4 of Counter U15 should also show a frequency output of 1.228 MHz.

The presence of a reset pulse should be checked by connecting the positive probe of a VOM or oscilloscope probe at pin 40 of Microprocessor U2. If the line stays low for a brief period after the unit is plugged into A.C. power, the circuit is operating properly. If no delay is noted, components of the reset circuit around Transistor Q1 should be checked with particular attention to Q1, Diode CR1 and Capacitors C1 and C2. If the microprocessor is being reset periodically by a low pulse at pin 40 of U2, a software problem is evident and the unit is automatically resetting at some point in the operating program. If this problem persists, PROMs U5 and U6 should be replaced with factory-programmed PROMs and the check made again.

CP-1500 SERIES CONTROL PANELS
CATEGORY SELECTION

The CP-1500 Series Control Panels require inputs and outputs to be selected by category and number. Those control panels use a 10-key pad for category input and output selections.

SELECTION

All inputs and outputs must be grouped into a maximum of ten selection categories each. They must be expressed as a mnemonic of four characters or less. Fill in the spaces below to define the desired category selections.

BUTTON/POSITION	INPUT/SOURCE CATEGORY MNEMONIC	OUTPUT/DESTINATION CATEGORY MNEMONIC
1	_____	_____
2	_____	_____
3	_____	_____
4	_____	_____
5	_____	_____
6	_____	_____
7	_____	_____
8	_____	_____
9	_____	_____
0	_____	_____

Example

BUTTON	SELECTION	SELECTION
1	VTR	VTR
2	CAM	MON
:	:	:
:	:	:
:	:	:
0	TEST	TEST

SWITCHER LEVELS

Please indicate how many levels your switcher is to contain, and which levels will be used. The following is a factory standard:

How many levels _____:

	YES	NO
Level 1 = Video	_____	_____
Level 2 = Audio 1	_____	_____
Level 3 = Time Code	_____	_____
Level 4 = Audio 2	_____	_____
Level 5 = Not defined	_____	_____
Level 6 = Not defined	_____	_____
Level 7 = Not defined	_____	_____

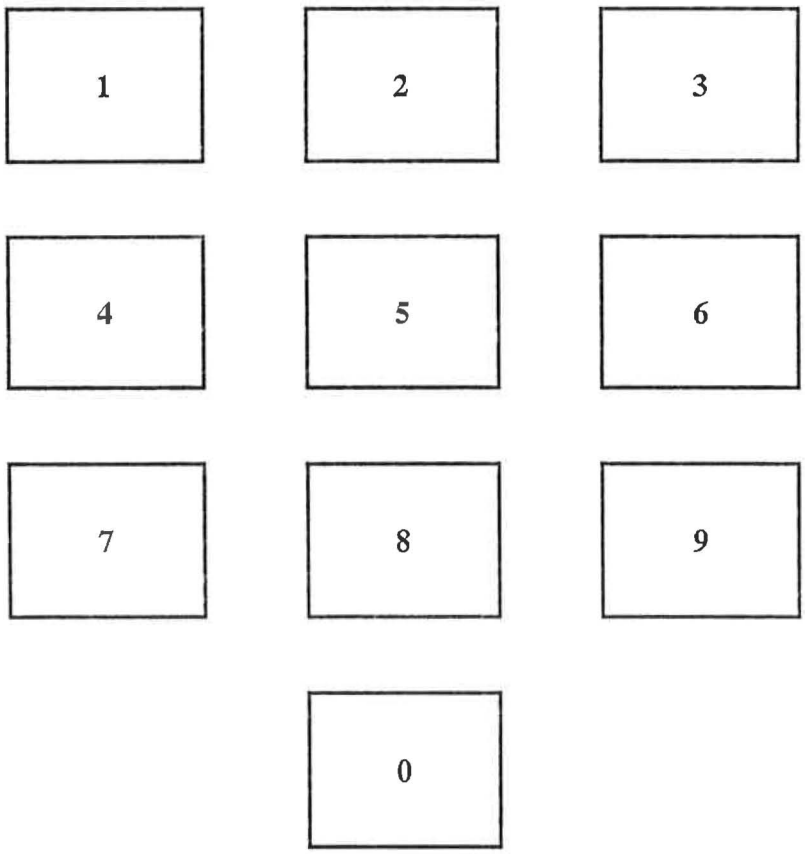

(Input Mnemonic)

1
0

(Output Mnemonic)

EXAMPLE

VTR
1
VTR

WRITE IN THE DESIRED INPUT AND OUTPUT MNEMONICS ASSOCIATED WITH EACH CATEGORY NUMBER.

MNEMONIC KEY CAP LETTERING
CP-1500 SERIES

FIGURE 5-1

HOW TO USE THE WORKSHEET
CP-1500

STATUS

The status display desired for each input and output must also be defined for each category number selection.

Read the instructions on how to fill out the worksheets and send a copy of the complete set of mnemonics for all inputs and outputs to BTS.

Category mnemonics must include selections within that category, or it will not be defined.

SWITCHER INPUT/OUTPUT NUMBER

This corresponds to the physical input or output of the routing switcher.

INPUT/OUTPUT SIGNAL NAME

This is the name of the source or destination of the signal.

CATEGORY GROUP NAME

This is the name of the category to which the signal will be assigned. All inputs and outputs must be grouped into a maximum of ten selection categories each. Example: VTR, CAM, TEST, FILM.

SELECTION NUMBER

This may be a one or two digit number you specify to call up a particular device. The number may be in the range of 0-99. There are ten categories, and each category may have 0-99 selections.

ENTRY/STATUS DISPLAY DATA

The CP-1500 has a window to display the video status and the audio status. With this in mind, it is possible to display a different mnemonic for audio than video. However, all audio levels will display the same mnemonic. These can not all be separated. The video and audio levels may have a different name, but they must have the same switcher input number.

If you have any questions concerning this worksheet, please call the BTS Customer Service Department.

Example

Switcher Input No.	Input Signal Name	Category Group Name	Selection # 1 or 2 digits	Entry/Status Display Data Video/Audio
00	Black Burst	TEST	0	BLK/BLK
01	1" BCN	VTR	1	VTR1/VTR1
:	:	:	:	:
:	:	:	:	:
:	:	:	:	:
19	Color Bars	TEST	0	BARS/TONE

CP-1500
INPUT MNEMONICS LIST

Switcher Input No.	Input Signal Name	Category Group Name NOTE 1	Selection # 1 or 2 digits	Entry/Status Display Data Video/Audio (4 or 8 char max.)
00				
01				
02				
03				
04				
05				
06				
07				
08				
09				
10				
11				
12				
13				
14				
15				
16				
17				
18				
19				
20				
21				
22				
23				
24				
25				
26				
27				
28				
29				
30				
31				
32				
33				
34				
35				

CP-1500
INPUT MNEMONICS LIST (cont'd)

Switcher Input No.	Input Signal Name	Category Group Name NOTE 1	Selection # 1 or 2 digits	Entry/Status Display Data Video/Audio (4 or 8 char max.)
36				
37				
38				
39				
40				
41				
42				
43				
44				
45				
46				
47				
48				
49				
50				
51				
52				
53				
54				
55				
56				
57				
58				
59				
60				
61				
62				
63				
64				
65				
66				
67				
68				
69				
70				
71				

CP-1500
INPUT MNEMONICS LIST (cont'd)

Switcher Input No.	Input Signal Name	Category Group Name NOTE 1	Selection # 1 or 2 digits	Entry/Status Display Data Video/Audio (4 or 8 char max.)
72				
73				
74				
75				
76				
77				
78				
79				
80				
81				
82				
83				
84				
85				
86				
87				
88				
89				
90				
91				
92				
93				
94				
95				
96				
97				
98				
99				

NOTE 1: All inputs must be grouped into a maximum of ten selection categories. Each category must be expressed as a mnemonic on four characters or less. Example: VTR, CAM, FLM, TST.

CP-1500
OUTPUT MNEMONICS LIST

Switcher Input No.	Output Signal Name	Category Group Name NOTE 1	Selection # 1 or 2 digits	Entry/Status Display Data Video/Audio (4 or 8 char max.)
00				
01				
02				
03				
04				
05				
06				
07				
08				
09				
10				
11				
12				
13				
14				
15				
16				
17				
18				
19				
20				
21				
22				
23				
24				
25				
26				
27				
28				
29				
30				
31				
32				
33				
34				
35				

CP-1500
OUTPUT MNEMONICS LIST (cont'd)

Switcher Input No.	Output Signal Name	Category Group Name NOTE 1	Selection # 1 or 2 digits	Entry/Status Display Data Video/Audio (4 or 8 char max.)
36				
37				
38				
39				
40				
41				
42				
43				
44				
45				
46				
47				
48				
49				
50				
51				
52				
53				
54				
55				
56				
57				
58				
59				
60				
61				
62				
63				
64				
65				
66				
67				
68				
69				
70				
71				

CP-1500
OUTPUT MNEMONICS LIST (cont'd)

Switcher Input No.	Output Signal Name	Category Group Name NOTE 1	Selection # 1 or 2 digits	Entry/Status Display Data Video/Audio (4 or 8 char max.)
72				
73				
74				
75				
76				
77				
78				
79				
80				
81				
82				
83				
84				
85				
86				
87				
88				
89				
90				
91				
92				
93				
94				
95				
96				
97				
98				
99				

NOTE 1: All inputs must be grouped into a maximum of ten selection categories. Each category must be expressed as a mnemonic on four characters or less. Example: VTR, CAM, FLM, TST.

PARTS LIST

EP-1510
BUS LOOP PANEL ASSEMBLY
01-033197-001 REV: -

REFERENCE DESIGNATOR	DESCRIPTION	PART NUMBER	ASSY QTY	SPARE QTY
QIO11	ASSY FCS-2198/3 BUS LOOP CARD	01-032694-001	1	
J1	CONN M/F CABLE 3 PIN	30-008525-001	1	

EP-1510
CABLE ASSEMBLY
01-033198-001 REV. -

REFERENCE DESIGNATOR	DESCRIPTION	PART NUMBER	ASSY QTY	SPARE QTY
P1 P2	CONN M/F RIBBON 34 PIN	30-005755-001	2	

EP-1510
POWER CABLE ASSEMBLY
01-033205-001 REV. -

REFERENCE DESIGNATOR	DESCRIPTION	PART NUMBER	ASSY QTY	SPARE QTY
(FOR P1 & P2)	PIN M CONN 18-22AWG	30-005026-003	4	
P1 P2	CONN F/O CABLE 3 PIN	30-008525-006	2	

EP-1510/1
CABLE ASSEMBLY
01-033226-001 REV. -

REFERENCE DESIGNATOR	DESCRIPTION	PART NUMBER	ASSY QTY	SPARE QTY
P1 P2	CONN M/F RIBBON 34 PIN	30-005755-001	2	

EP-1510/2
CABLE ASSEMBLY
01-033227-001 REV. -

P1/B P2/B	CONN M/F RIBBON 34 PIN	30-005755-001	2	

CP-1501/1511
DOWNLOAD MODIFICATION INSTRUCTIONS

To add downloading to any CP-1501/1511 Control Panel that does not possess this capability, a modification kit is available from BTS Customer Services Department.

Installation of the CP-1501/1511 Download Modification Kit will allow custom mnemonics to be downloaded to the control panels from an on-site computer. The party line is used for downloading, along with an interface to the computer to allow the downloading to be accomplished without changing any panel wiring.

The CP-1501/1511 Control Panel Download Modification Kit contains the following parts:

CP-1501 UPGRADE DOWN/LOAD KIT
44-034811-001 REV. X2

DESCRIPTION	PART NUMBER	QTY
ASSY MOD DN/LD MNEM	01-034291-001	1
MANUAL CP-1500 SERIES CNTL PNL	04-021011-007	1
SPACER HEX M/F 4-40X1IN ALUM	23-012559-003	4
LABEL SW (SET) CP-1510	32-031911-001	1
LABEL SW SET FCS-3194	32-034900-001	1
PROM CP-1501/1511A DN/LD STD	45-034966-01A	1
IC 65C02 8-BIT MPRS	64-005865-054	1
IC DS1225 8KX8 NONVOLATILE RAM	64-033208-003	1

PARTS LIST

GENERAL

This section contains a complete listing of all replaceable electronic components used in each chassis and printed circuit card assembly and includes recommended spares.

Components are grouped by type. Locate a part by the reference designator number as shown on the Electrical Schematic Diagram.

A spare parts kit can be purchased. The recommended quantity is listed. Component spares do not include fixed resistors, most common capacitors and other readily available or long life components. If you require an inclusive spares listing, contact the BTS Broadcast Television Systems, Inc., Customer Services Department.

ORDERING INFORMATION

When ordering replacement parts, please provide the following information:

1. Part Number, Quantity, and Description.

2. Model and Serial Number of the Equipment.

For any part not listed, substitute its location and function for the part number.

NOTE

While every effort has been made to keep these parts listings current and accurate, the manufacturer must reserve the right to make changes in components, suppliers, and specifications without notice.

PARTS LIST

CP-1500
CHASSIS WIRING ASSEMBLY 117V
01-027026-001 REV. F

REFERENCE DESIGNATOR	DESCRIPTION	PART NUMBER	ASSY QTY	SPARE QTY
	SPARE PARTS KIT	44-029666-001		
T1	XFMR PWR CP1500D/1550 110/220V	57-026961-001	1	1
VR1	RECT BRIDGE VS148	58-005774-001	1	1
C1	CAP ELECT 6800UF 15V TERM	61-005624-003	1	
C2 C3	CAP TANT 1UF 35V AXL	61-005672-253	2	
F1	FUSE 1/4AMP SLO-BLO	62-005684-010	1	5
VR2	IC 7805 FIXED POS OP 5V REG	64-005702-013	1	1
XF1	SOCKET FUSE LO PROFILE	66-019144-001	1	
S1	SWITCH TOGGLE SPDT PNL	71-008552-001	1	

CP-1550
CONTROL PANEL ASSEMBLY 117V
01-026942-001 REV. G

REFERENCE DESIGNATOR	DESCRIPTION	PART NUMBER	ASSY QTY	SPARE QTY
	SPARE PARTS KIT	44-029667-001		
A1	ASSY CP-1500 PRTY LN INTF CARD	01-026945-001	1	
A3	ASSY CP-1550 PNL INTF CARD	01-026947-001	1	
A4	ASSY CP-1550 DPY & TAKE CARD	01-026948-001	1	
A5	ASSY CP-1550 ENTER CARD	01-026949-001	1	
QG001	ASSY CP-1500 CPU-2 CARD	01-031799-001	1	
J2 J3	CONN M/F BNC	30-005746-001	2	
A3P2 A5P1	CONN F/M RIBBON 14 PIN	30-005754-001	2	
A1P1 A2P1 A3P1	CONN M/F RIBBON 34 PIN	30-005755-001	3	
A4P1 A3P4	CONN M/F RIBBON 26 PIN	30-005755-002	2	
A3P3	CONN M/F PCB 15 PIN	30-011234-012	1	
A1P2	CONN M/F PCB 6 PIN	30-011234-036	1	
	PIN F CONN 18-24AWG	30-012775-001	17	
	PIN F CONN 26-22AWG (REEL)	30-024936-003	3	
P4	CONN M/F CABLE 3 PIN SING ROW	30-024937-013	1	
	PROM CP-1550 STD U5	45-030477-01E	1	
T1	XFMR PWR CP1500D/1550 110/220V	57-026961-001	1	1

PARTS LIST

CP-1550
CONTROL PANEL ASSEMBLY 117V (cont'd)
01-026942-001 REV. G

REFERENCE DESIGNATOR	DESCRIPTION	PART NUMBER	ASSY QTY	SPARE QTY
CR1	RECT BRIDGE VS148	58-005774-001	1	1
C1	CAP ELECT 6800UF 15V TERM	61-005624-003	1	
C2 C3	CAP TANT 1UF 35V AXL	61-005672-253	2	
F1	FUSE 1/4AMP SLO-BLO	62-005684-010	1	5
XF1	SOCKET FUSE 5/8 DIA	66-002046-001	1	
VR1	IC 7805 FIXED POS OP 5V REG	64-005702-013	1	1
S1	SWITCH ROTARY DIG RDT 10 POS	71-005834-004	1	

CP-1500
LOGIC CARD ASSEMBLY
01-031799-001 REV. D

REFERENCE DESIGNATOR	DESCRIPTION	PART NUMBER	ASSY QTY	SPARE QTY
	SPARE PARTS KIT	44-032851-001		
QG001	PCB CP-1500 CPU-2	54-031798-001	1	
	CONN 0/M PCB 36 PIN SING TIN	30-024937-047		
JI	CONN F/M HEADER 34 PIN	30-030149-006	1	
Q1 Q2	XSTR HI SPD SW NPN 2N3904	58-005708-019	2	1
Q3 Q4	XSTR HI SPD SW PNP 2N3906	58-005708-025	2	1
CR1 CR2	DIODE SIGNAL 1N270 T/R	58-005765-002	2	1
C11	CAP MICA 300PF 500V RDL	61-005462-042	1	
C1	CAP TANT 22UF 15V RDL	61-005625-029	1	
C2-C5	CAP TANT 1UF 35V RDL	61-005625-072	4	
C6-C10 C14	CAP CERM DISK 10NF 100V RDL	61-005662-060	6	
U8 U9	IC 555 LINEAR TIMER	64-005700-086	2	1
U2	IC 6502 MPU	64-005865-029	1	1
U3	IC 6116-4 2KX8 200NS	64-013906-008	1	1
U11	IC 74LS00 QUAD 2IP POS ND	64-030028-004	1	1
U10	IC 74LS04 H INV	64-030028-007	1	1
U14	IC 74LS74 D D POS TRIG F/F	64-030028-015	1	1
U12 U13	IC 74LS138 3/8LN DCD/MUX	64-030028-051	2	1
U15	IC 74LS290 DEC CNT	64-030028-052	1	1
U1 U7	IC 74LS240 OCT BUS DR/INV	64-030028-073	2	1
DS1 DS2	INDIC SOLID STA RED RL-4403	65-010700-004	2	1

PARTS LIST

CP-1500
LOGIC CARD ASSEMBLY (cont'd)
01-031799-001 REV. D

REFERENCE DESIGNATOR	DESCRIPTION	PART NUMBER	ASSY QTY	SPARE QTY
XU2	SOCKET DIP 40 PIN	66-008701-015	1	
XU3 XU5 XU6	SOCKET DIP 24 PIN	66-008701-019	3	
R4	RES CRBN FLM 47R 1/4W 5%	69-021150-033	1	
R7	RES CRBN FLM 15OR 1/4W 5%	69-021150-045	1	
R1 R2 R3 R10	RES CRBN FLM 1K 1/4W 5%	69-021150-065	4	
R5 R6 R11 R8 R9 R15 R16 R19 R20	RES CRBN FLM 3K3 1/4W 5%	69-021150-077	9	
R12	RES CRBN FLM 10K 1/4W 5%	69-021150-089	1	
R13 R14	RES CRBN FLM 33K 1/4W 5%	69-021150-101	2	
R17 R18	RES NET 10SIP 5K6 1/5W 2%	69-025165-003	2	
YI	XTAL 6.144MHZ 50 OHM	70-009568-034	1	
S1 S2	SWITCH SLIDE 8 POS PCB	71-021603-001	2	

CP-1500
LOGIC CARD ASSEMBLY
01-026946-001 REV. A

REFERENCE DESIGNATOR	DESCRIPTION	PART NUMBER	ASSY QTY	SPARE QTY
	SPARE PARTS KIT	44-029668-001		
	PCB CP-1500 CPU	54-026215-001	1	
JI	CONN F/M HEADER 34 PIN	30-030149-006	1	
Q1 Q2	XSTR HI SPD SW NPN 2N3904	58-005708-019	2	1
Q3 Q4	XSTR HI SPD SW PNP 2N3906	58-005708-025	2	1
CR1 CR2	DIODE SIGNAL 1N270	58-005765-002	2	1
C1	CAP TANT 22UF 15V RDL	61-005625-029	1	
C2 C3 C4 C5	CAP TANT 1UF 35V RDL	61-005625-072	4	
C6-C10	CAP CERM DISK 10NF 100V RDL	61-005662-060	5	
U8 U9	IC 555 LINEAR TIMER	64-005700-086	2	1
U2	IC 6502 MPU	64-005865-029	1	1
U3 U4	IC 2114 4096B STC RAM 450NS	64-005865-031	2	1
U5 U6	IC 2716 2K X 8 EPROM	64-022797-003	2	1
U11	IC 74LS00 QUAD 2IP POS ND	64-030028-004	1	1
U10	IC 74LS04 H INV	64-030028-007	1	1
U14	IC 74LS74 D D POS TRIG F/F	64-030028-015	1	1
U12 U13	IC 74LS138 3/8LN DCD/MUX	64-030028-051	2	1
U15	IC 74LS290 DEC CNT	64-030028-052	1	1
U1 U7	IC 74LS240 OCT BUS DR/INV	64-030028-073	2	1

PARTS LIST

CP-1500
LOGIC CARD ASSEMBLY (cont'd)
01-026946-001 REV. A

REFERENCE DESIGNATOR	DESCRIPTION	PART NUMBER	ASSY QTY	SPARE QTY
DS1 DS2	INDIC SOLID STA RED MV5053	65-010700-004	2	1
XU2	SOCKET DIP 40 PIN	66-008701-015	1	
XU3 XU4	SOCKET DIP 18 PIN	66-008701-017	2	
XU5 XU6	SOCKET DIP 24 PIN	66-008701-019	2	
R4	RES CRBN FLM 47R 1/4W 5%	69-021150-033	1	
R7	RES CRBN FLM 15OR 1/4W 5%	69-021150-045	1	
R1 R2 R3 R10	RES CRBN FLM 1K 1/4W 5%	69-021150-065	4	
R5 R6 R8 R9 R11 R15 R16	RES CRBN FLM 3K3 1/4W 5%	69-021150-077	7	
R12	RES CRBN FLM 10K 1/4W 5%	69-021150-089	1	
R13 R14	RES CRBN FLM 33K 1/4W 5%	69-021150-101	2	
R17 R18	RES NET 10SIP 5K6 1/5W 2%	69-025165-003	2	
YI	XTAL 6.144MHZ 50 OHM	70-009568-034	1	
S1 S2	SWITCH SLIDE 8 POS PCB	71-021603-001	2	

CP-1500
PARTY LINE INTERFACE CARD ASSEMBLY
01-026945-001 REV: C

REFERENCE DESIGNATOR	DESCRIPTION	PART NUMBER	ASSY QTY	SPARE QTY
	SPARE PARTS KIT	44-029669-001		
	PCB CP-1500 PRTY LN INTF	54-026226-001	1	
J2	CONN M/M PCB 6 PIN	30-011234-020	1	
J1	CONN F/M HEADER 34 PIN	30-030149-006	1	
Q1	XSTR HI SPD SW NPN 2N4401	58-005708-011	1	1
Q5 Q6	XSTR HI SPD SW PNP 2N3906	58-005708-025	2	1
Q4	XSTR SW NPN 2N4264	58-005709-002	1	1
Q2 Q3	XSTR AMPL PNP MPS6523	58-005710-004	2	1
CR4	DIODE SIGNAL 1N270 T/R	58-005765-002	1	1
CR1-CR3	DIODE SIGNAL 1N4148 T/R	58-005765-005	3	1
C1	CAP MICA 1000PF 100V RDL	61-005462-073	1	
C4	CAP TANT 22UF 15V RDL	61-005625-029	1	
C2	CAP TANT 10UF 25V RDL	61-005625-058	1	
C3	CAP TANT 1UF 35V RDL	61-005625-072	1	
C5 C7-C12	CAP POLY 100NF 200V RDL	61-019844-001	7	
C6	CAP CERM 10NF 100V RDL	61-025536-006	1	

PARTS LIST

CP-1500
PARTY LINE INTERFACE CARD ASSEMBLY (cont'd)
01-026945-001 REV: C

REFERENCE DESIGNATOR	DESCRIPTION	PART NUMBER	ASSY QTY	SPARE QTY
U11	IC 555 PRTY LN TIMER	64-005700-136	1	1
U6	IC 40175 QUAD D F/F	64-024556-052	1	1
U12	IC 74LS00 QUAD 2IP POS ND	64-030028-004	1	1
U13	IC 74LS04 H INV	64-030028-007	1	1
U3	IC 74LS10 TRI 3IP POS ND	64-030028-009	1	1
U9	IC 74LS30 8IP POS ND	64-030028-012	1	1
U14	IC 74LS74 D D POS TRIG F/F	64-030028-015	1	1
U4	IC 74LS193 BIN SYNC UP/DN D	64-030028-023	1	1
U10 U15	IC 74LS164 8B PARL OP SER SHF	64-030028-049	2	1
U1	IC 74LS138 3/8LN DCD/MUX	64-030028-051	1	1
U7 U8	IC 74LS240 OCT BUS DR/INV	64-030028-073	2	1
U5	IC 74LS244 OCT BUS DR/NINV	64-030028-076	1	1
U2	IC 74LS165 PARL 8B SHF RGS	64-030028-092	1	1
R10	RES MTL FLM 8K25 1/8W 1%	69-008591-056	1	
R11	RES CRBN FLM 1OOR 1/4W 5%	69-021150-041	1	
R3	RES CRBN FLM 1K 1/4W 5%	69-021150-065	1	
R7-R9 R12 R14 R15-R29	RES CRBN FLM 3K3 1/4W 5%	69-021150-077	20	
R5	RES CRBN FLM 6K8 1/4W 5%	69-021150-085	1	
R2	RES CRBN FLM 10K 1/4W 5%	69-021150-089	1	
R1 R13	RES CRBN FLM 47K 1/4W 5%	69-021150-105	2	
R4 R6	RES CRBN FLM 100K 1/4W 5%	69-021150-113	2	
S1 S2	SWITCH SLIDE 8 POS PCB	71-021603-001	2	

CP-1500
DISPLAY AND KEYBOARD ASSEMBLY
01-026970-001 REV. C

REFERENCE DESIGNATOR	DESCRIPTION	PART NUMBER	ASSY QTY	SPARE QTY
	SPARE PARTS KIT	44-029670-001		
	PCB CP-1500 DPY & KEYBRD	54-026121-001	1	
A1P1/A2P1	ASSY CP-1500 CABLE	01-030500-001	1	
C1	CAP TANT 1UF 35V RDL	61-005625-072	1	
C2 C3	CAP POLY 100NF 200V RDL	61-019844-001	2	
U3	IC 74LS138 3/8LN DCD/MUX	64-030028-051	1	1
U1 U2	IC 74LS240 OCT BUS DR/INV	64-030028-073	2	1

PARTS LIST

CP-1500
DISPLAY AND KEYBOARD ASSEMBLY (cont'd)
01-026970-001 REV. C

REFERENCE DESIGNATOR	DESCRIPTION	PART NUMBER	ASSY QTY	SPARE QTY
DS1-DS5	INDIC RDT DL-1414	65-026791-001	5	1
XDS1-XDS5	SOCKET SIP 6 PIN	66-028087-001	10	
R1-R16	RES CRBN FLM 3K3 1/4W 5%	69-021150-077	16	
S3-S8	SWITCH PB SPST PNL	71-021871-005	6	
S2	SWITCH PB SPST 3 POS PNL	71-021871-006	1	
S1	SWITCH PB SPST 6 POS PNL	71-021871-007	1	

CP-1550
PANEL INTERFACE CARD ASSEMBLY
01-026947-001 REV. A

REFERENCE DESIGNATOR	DESCRIPTION	PART NUMBER	ASSY QTY	SPARE QTY
	SPARE PARTS KIT	44-029671-001		
	PCB CP-1550 PNL INTF	54-026748-001	1	
J4	CONN F/M PCB 26 PIN	30-010023-002	1	
J3	CONN M/M PCB 15 PIN	30-011234-011	1	
J1	CONN F/M HEADER 34 PIN	30-030149-006	1	
C6	CAP TANT 1UF 35V RDL	61-005625-072	1	
C1 C2 C3 C4 C5	CAP POLY 10NF 200V RDL	61-019844-003	5	
U1 U11	IC 74LS174 H D TYPE F/F	64-030028-001	2	1
U2 U3	IC 74LS138 3/8LN DCD/MUX	64-030028-051	2	1
U4 U5 U6 U7 U8 U9 U10	IC 74LS240 OCT BUS DR/INV	64-030028-073	7	1
J2	SOCKET DIP 14 PIN	66-008701-005	1	
R8-R15 R7	RES CRBN FLM 33OR 1/4W 5%	69-021150-053	9	
R1-R7	RES NET 10SIP 5K6 1/5W 2%	69-025165-003	7	
S1 S2 S3 S4	SWITCH SLIDE 8 POS PCB	71-021603-001	4	

PARTS LIST

CP-1550
DISPLAY AND TAKE CARD ASSEMBLY
01-026948-001 REV. B

REFERENCE DESIGNATOR	DESCRIPTION	PART NUMBER	ASSY QTY	SPARE QTY
	SPARE PARTS KIT	44-032920-000		
	PCB CP-1550 DPY & TAKE	54-026744-001	1	
J1	CONN F/M PCB 26 PIN	30-010023-002	1	
C1 C2	CAP CERM DISK 10NF 100V RDL	61-005662-060	2	
DS1-DS3	INDIC RDT DL-1414	65-026791-001	3	1
S2-S5	SWITCH PB SPST WITH LED PCB	71-026779-001	4	
S1	SWITCH PB SPST PCB	71-026779-002	1	

CP-1550
ENTER CARD ASSEMBLY
01-026949-001 REV. -

REFERENCE DESIGNATOR	DESCRIPTION	PART NUMBER	ASSY QTY	SPARE QTY
	PCB CP-1550 ENTRY	54-026747-001	1	
J1	SOCKET DIP 14 PIN	66-008701-005	1	
S1-S3	SWITCH PB SPST WITH LED PCB	71-026779-001	3	

PARTS LIST

CP-1510
BUTTON/DISPLAY INTERFACE CARD ASSEMBLY
01-029969-001 REV. B

REFERENCE DESIGNATOR	DESCRIPTION	PART NUMBER	ASSY QTY	SPARE QTY
	SPARE PARTS KIT	44-032921-000		
	PCB CP-1510 BUTN/DPY INTF	54-029944-001	1	
	JUMPER PCB F SINGLE	30-016558-002	3	
J3	CONN M/M PCB 6 PIN	30-011234-008	1	
	CONN 0/M PCB 36 PIN SING GOLD	30-024937-047		
J2	CONN F/M HEADER 34 PIN	30-030149-006	1	
J1	CONN F/M HEADER 50 PIN	30-030149-010	1	
D1 D2	DIODE SIGNAL 1N270 T/R	58-005765-002	2	1
C8	CAP TANT 1UF 35V RDL	61-005625-072	1	
C1-C7	CAP CERM 100NF 50V RDL	61-025536-013	7	
U9	IC 4N36 PHOTOXSTR & LED	64-011211-002	1	1
U5 U6	IC 74LS00 QUAD 2IP POS ND	64-030028-004	2	1
U8	IC 74LS136 QUAD EXCL OR	64-030028-043	1	1
U3 U4 U7	IC 74LS240 OCT BUS DR/INV	64-030028-073	3	1
U2	IC 74LS245 OCT BUS XCVR/NINV	64-030028-090	1	1
U1	IC 74LS154 4 TO 16 DCD/DEMUX	64-030028-112	1	1
R7 R8	RES CRBN FLM 1K8 1/4W 5%	69-021150-071	2	
R1-R5 R9 R10	RES CRBN FLM 3K3 1/4W 5%	69-021150-077	7	
R6	RES CRBN FLM 33K 1/4W 5%	69-021150-101	1	
R11 R12	RES NET 10SIP 3K3 1/5W 2%	69-025165-010	2	

CP-1510
REAR PANEL POWER SUPPLY ASSEMBLY
01-031588-001 REV. H

REFERENCE DESIGNATOR	DESCRIPTION	PART NUMBER	ASSY QTY	SPARE QTY
	SPARE PARTS KIT	44-032915-001		
J1 J2 J3	CONN M/F BNC	30-005746-001	3	
QI005P3 A1P2	CONN M/F PCB 6 PIN	30-011234-036	2	
	PIN F CONN 18-24AWG	30-012775-001	8	
	PIN F CONN 18-22AWG	30-005027-003	2	
F1	FUSE 2AMP STD-BLO	62-005683-020	1	5
XF1	SOCKET FUSE 5/8 DIA	66-002046-001	1	
S1	SWITCH TOGGLE SPDT PNL	71-008552-001	1	

PARTS LIST

CP-1510
CABLE ASSEMBLY
01-031530-001 REV. B

REFERENCE DESIGNATOR	DESCRIPTION	PART NUMBER	ASSY QTY	SPARE QTY
P1-P3	CONN M/F RIBBON 34 PIN	30-005755-001	3	

EP-1510/1
FINAL ASSEMBLY
01-033199-001 REV. -

REFERENCE DESIGNATOR	DESCRIPTION	PART NUMBER	ASSY QTY	SPARE QTY
	ASSY CP-1510 CNTRL PNL	01-031378-001	1	
	ASSY CP-1500 SUB CHAS	01-032807-001	1	
	ASSY EP-1510 BUS LOOP PANEL	01-033197-001	1	
(W4)	ASSY EP-1510 CABLE	01-033198-001	1	
(W3)	ASSY EP-1510 PWR CABLE	01-033205-001	1	
W2)	ASSY EP-1510/1 CABLE	01-033226-001	1	
P3/A P3/B	CONN M/F PCB 6 PIN	30-011234-036	2	
	PIN F CONN 18-22AWG	30-005027-003	2	
	PIN F CONN 18-24AWG	30-012775-001	4	

EP-1510/2
FINAL ASSEMBLY
01-033200-001 REV. -

REFERENCE DESIGNATOR	DESCRIPTION	PART NUMBER	ASSY QTY	SPARE QTY
	ASSY CP-1510 CNTRL PNL	01-031378-001	1	
(W1)	ASSY EP-1510/2 CABLE	01-033227-001	1	
EI011P1-J1/A-J1/B	CONN F/M/M SPLITTER 34 PIN	30-031109-004	1	

DRAWINGS

This section contains Assembly Drawings and Electrical Schematic diagrams for the equipment described in this manual. BTS Broadcast Television Systems, Inc. policy is one of continual improvement. For that reason, BTS Broadcast Television Systems, Inc. reserves the right to change drawings without notice and without incurring any obligation relating to previously manufactured items.

NOTE

The drawings contained in this section illustrate the proprietary design features of a product of BTS Broadcast Television Systems, Inc., and may not be reproduced, released or disclosed in whole or part for procurement or manufacturing purposes except as authorized by license or express written consent of BTS Broadcast Television systems, Inc., Salt Lake City, Utah.

INDEX

DRAWING NAME	NUMBER	REV.	PAGE
CP-1500/1/2/D			
INTERCONNECTION DIAGRAM, CP-1500/1, CP-1500/2	51-026967-000	C	7-2
ASSEMBLY, CHASSIS WIRING, CP-1500/D	01-027026-001	G	7-3
INTERCONNECTION DIAGRAM, CP-1500/D	51-027028-000	B	7-4
CP-1550 CONTROL PANEL			
INTERCONNECTION DIAGRAM	51-026943-000	E	7-5
ASSEMBLY, CHASSIS WIRING	01-026942-001	G	7-7
LOGIC CARD (A2) (All Units)			
ASSEMBLY	01-031799-001	D	7-8
ELECTRICAL SCHEMATIC	50-031800-000	D	7-9
PARTY LINE INTERFACE (A1) (All Units)			
ASSEMBLY	01-026945-001	C	7-10
ELECTRICAL SCHEMATIC	50-026955-000	A	7-11
DISPLAY AND KEYBOARD CARD (A3) (CP-1500/1/2/D)			
ASSEMBLY	01-026970-001	C	7-12
ELECTRICAL SCHEMATIC	50-026971-000	–	7-13
PANEL INTERFACE (A3) (CP-1550 Only)			
ASSEMBLY	01-026947-001	A	7-14
DISPLAY AND TAKE (A4) (CP-1550 Only)			
ASSEMBLY	01-026948-001	B	7-15

INDEX (cont'd)

DRAWING NAME	NUMBER	REV.	PAGE
ENTER CARD (A5) (CP-1550 Only)			
ASSEMBLY	01-026949-001	–	7-16
CONTROL AND INTERFACE CARDS (A3, A4, A5) (CP-1550 Only)			
ELECTRICAL SCHEMATIC	50-026957-000	B	7-17
CP-1501ADL/D CONTROL PANEL			
ASSEMBLY	F7-030800-TAB	-/A	7-19
CP-1501ADL/1 CONTROL PANEL			
ASSEMBLY	F7-030800-TAB	A/A	7-20
CP-1501ADL/2 CONTROL PANEL			
ASSEMBLY	F7-030800-TAB	A/A	7-21
CP-1510 CONTROL PANEL			
INTERCONNECTION DIAGRAM	51-031529-000	E	7-22
ASSEMBLY	01-031378-001	–	7-23
CP-1510 BUTTON/DISPLAY CARD			
ASSEMBLY	01-029967-001	A	7-24
ELECTRICAL SCHEMATIC	50-029968-000	A	7-25
CP-1510 BUTTON/DISPLAY INTERFACE CARD			
ASSEMBLY	01-029969-001	B	7-26
ELECTRICAL SCHEMATIC	50-029970-000	A	7-27
CP-1510 POWER SUPPLY REAR PANEL	01-031588-001	H	7-28
CP-1510 CABLE	01-031530-001	B	7-29
EP-1510/1/2 CONTROL PANEL			
INTERCONNECTION DIAGRAM	51-033201-000	–	7-31
EP-1510/1 CONTROL PANEL			
ASSEMBLY	01-033199-001	–	7-32
EP-1510/2 CONTROL PANEL			
ASSEMBLY	01-033200-001	–	7-33
EP-1510/2 BUS LOOP PANEL			
ASSEMBLY	01-033197-001	–	7-34
EP-1510 CABLE			
ASSEMBLY	01-033198-001	–	7-35
EP-1510 POWER CABLE			
ASSEMBLY	01-033205-001	–	7-36
EP-1510/1 CABLE			
ASSEMBLY	01-033226-001	–	7-37
EP-1510/2 CABLE			
ASSEMBLY	01-033227-001	–	7-38
CP-1511ADL CONTROL PANEL			
ASSEMBLY	F7-030800-TAB	-/A	7-39

REVISIONS			
LETTER	DESCRIPTION	DATE	APPROVED
—	RELEASED TO PRODUCTION	1-27-81	[illegible]
A	INCORPORATED ECO. 6832	9.4.81	[illegible]
B	INCORPORATED ECO 7434	9-23-82	[illegible]
C	INCORPORATED ECO 8396	7-17-83	[illegible]

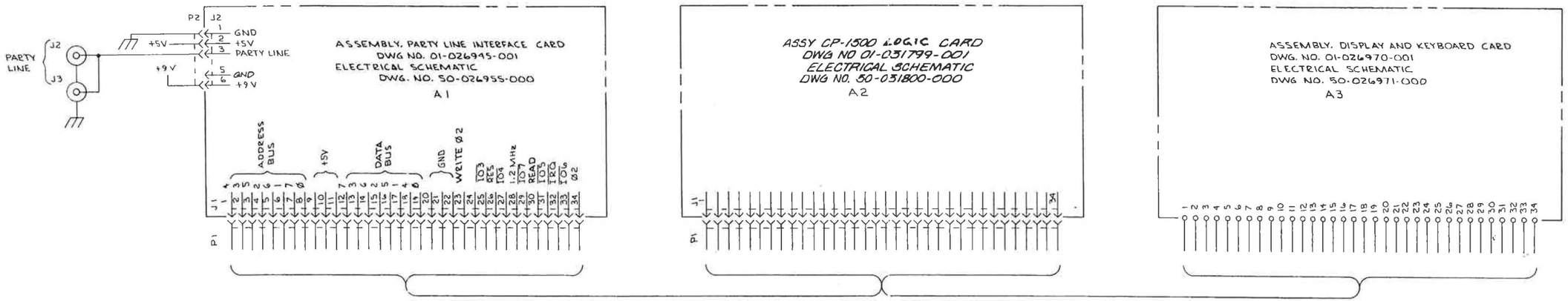

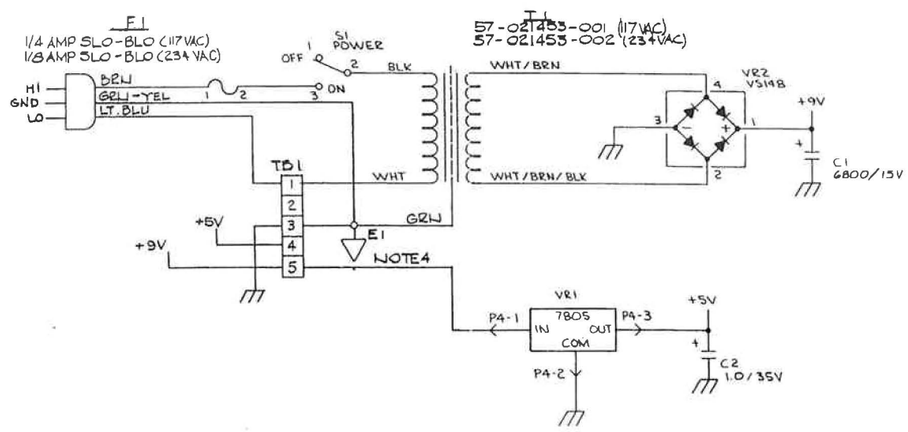

NOTES:

1. UNLESS OTHERWISE SPECIFIED:
   A. CAPACITANCE VALUES ARE IN MICROFARADS.
   B. VOLTAGES ARE IN D.C.
2. TERMINATION TABLE: TT52-026966-000.
3. DRAWING IS SHOWN FOR A SINGLE CP-1500, PART NO. 01-026964-001. FOR A DUAL CP-1500, PART NO. 01-026964-002, THE CIRCUITRY SHOWN IS DUPLICATED TWICE.
4. ON 117 VAC UNITS "E1" IS CONNECTED TO CHASSIS (TB1-3) ON 234 VAC UNITS. "E1" IS ISOLATED FROM CHASSIS GROUND (TB-3) AND CONNECTED TO "T1-GRN."

NEXT ASSY	USED ON
—	CP-1501
01-026965-002	CP-1500/2
01-026965-001	CP-1500/1

APPLICATION

DO NOT SCALE THIS DRAWING
DIMENSION IN INCHES UNLESS OTHERWISE INDICATED
TOLERANCES UNLESS OTHERWISE INDICATED
DECIMALS:
.X = ±
.XX = ±
.XXX = ±
FRACTIONS = ±
ANGLES = ±

ITEM NO.	QTY	DESCRIPTION	PART NO

LIST OF MATERIALS

DRAWN BY [illegible] DATE [illegible]
CHECKED [illegible] DATE [illegible]
APPROVED [illegible] DATE [illegible]

These materials are and contain confidential and trade secret information of Fernseh Inc. Neither they nor the information they contain shall be copied, reproduced, or disclosed to persons not having a need to know for Fernseh Inc. business purposes or used except for such purposes without prior written permission of Fernseh Inc.
© Copyright 1980 Fernseh Inc. All rights reserved.

BTS
BROADCAST TELEVISION SYSTEMS, INC.
A joint Company of Bosch and Philips

INT DIAG CP-1500 CHAS WIRING

SIZE D | REV C | DWG. NO. 51-026967-000
SCALE: NONE | SHEET 1 OF 1

REVISIONS				
LETTER	DESCRIPTION	DATE	APPROVED	
—	RELEASED TO PRODUCTION	1-27-81	[illegible]	
A	INCORPORATED ECO NO. 6727-1	1-23-81	[illegible]	DAW
B	INCORPORATED ECO NO. 6892-2	8-20-81	[illegible]	[illegible]
F	INCORPORATED ECO 9239	5-11-84	PB	ESV

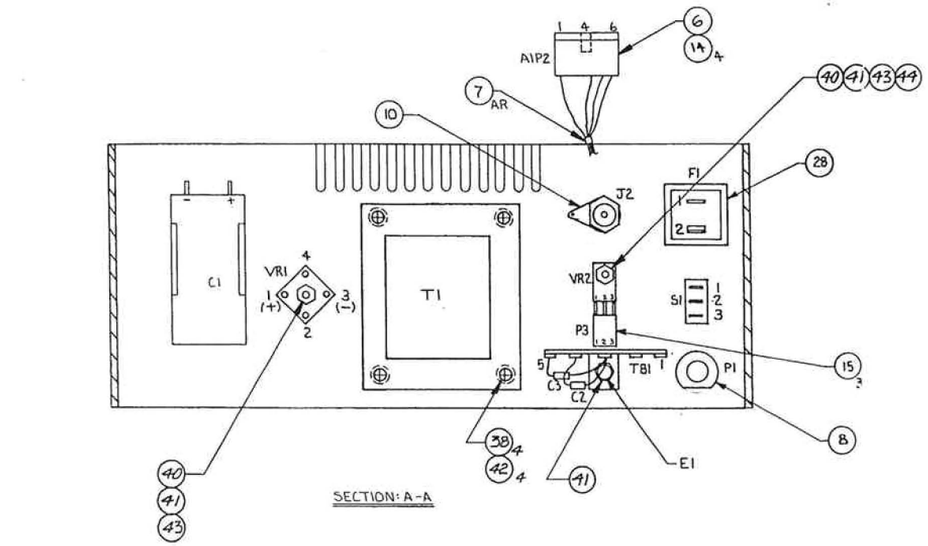

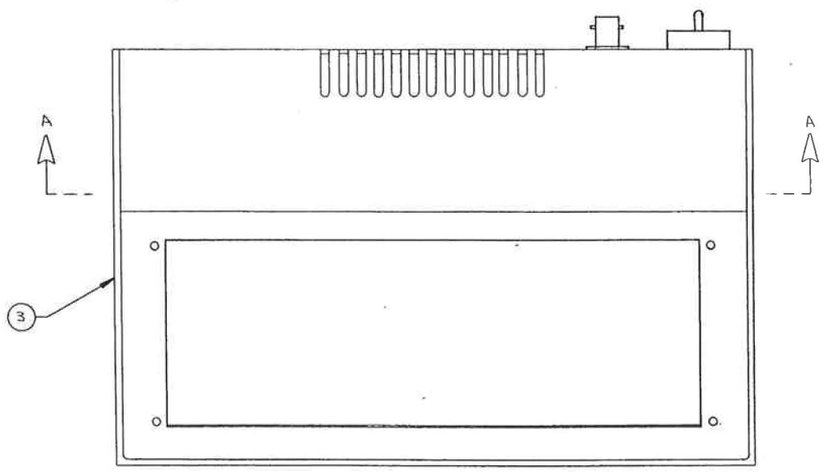

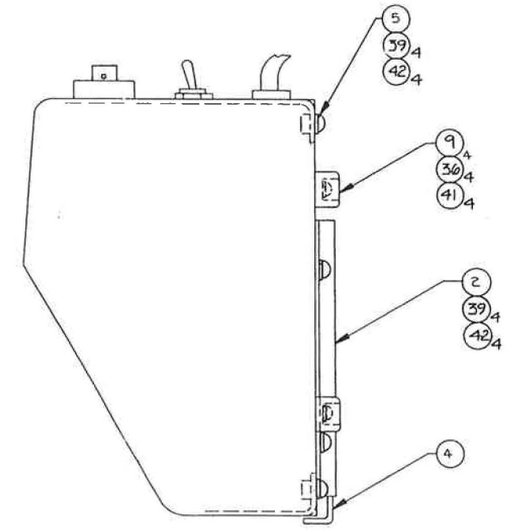

NOTES:
1. BILL OF MATERIALS: BOM01-027026-TAB
2. TERMINATION TABLE: TT52-027027-000.
3. INTERCONNECTION DIAGRAM: 51-027028-000.
4. TAG WITH PART NO., WORK ORDER NO. AND DATE.

ITEM NO.	QTY	DESCRIPTION	PART NO
		LIST OF MATERIALS	

NEXT ASSY.	USED ON
01-032811	CP-1501A/D
01-032809	CP-1501D
01-027025	CP-1500D

APPLICATION

DO NOT SCALE THIS DRAWING
DIMENSION IN INCHES UNLESS OTHERWISE INDICATED
TOLERANCES UNLESS OTHERWISE INDICATED
DECIMALS: .X = ± .XX = ± .XXX = ± FRACTIONS = ± ANGLES = ±

DRAWN BY [illegible] DATE 9/15/81
CHECKED [illegible] DATE 8-5-81
APPROVED [illegible] DATE [illegible]

These materials are and contain confidential and trade secret information of Fernseh Inc. Neither they nor the information they contain shall be copied, reproduced, or disclosed to persons not having a need to know for Fernseh Inc. business purposes or used except for such purposes without prior written permission of Fernseh Inc.
© Copyright 1980 Fernseh Inc. All rights reserved.

BTS
BTS BROADCAST TELEVISION SYSTEMS, INC.
A Joint Company of Bosch and Philips

ASSY CP-1500D CHAS WIRING 117V

SIZE D | REV. G | DWG NO. 01-027026-001
SCALE: 1/1 | SHEET 1 OF 1

REVISIONS			
LETTER	DESCRIPTION	DATE	APPROVED
—	RELEASED TO PRODUCTION	1-28-81	
A	INCORPORATED ECO NO. 6829	8-20-81	
B	INCORPORATED ECO 7434	7-23-82	

DHD (NEW)

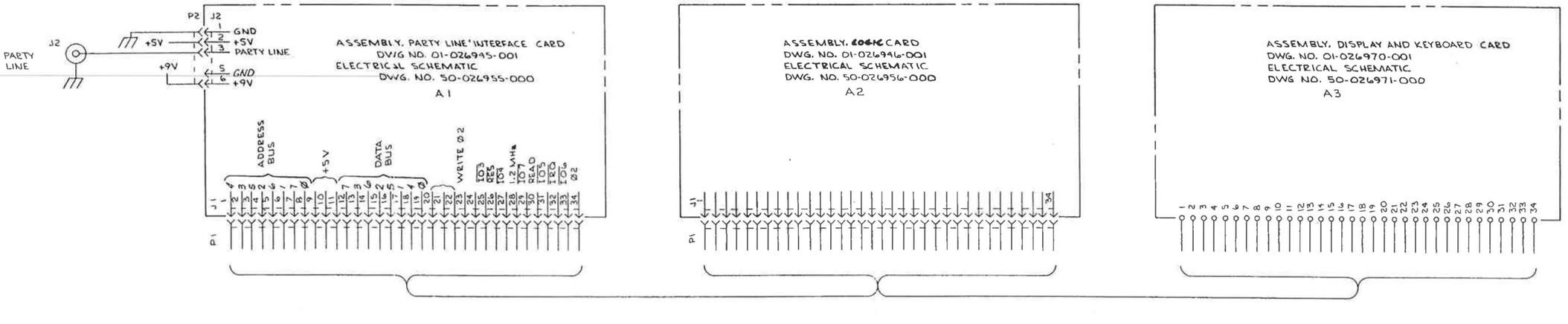

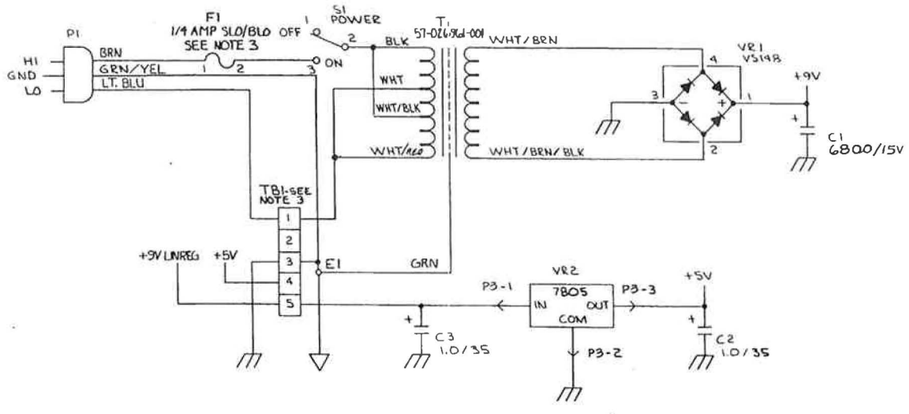

NOTES:

1. UNLESS OTHERWISE SPECIFIED:
   A. CAPACITANCE VALUES ARE IN MICROFARADS.
   B. VOLTAGES ARE IN D.C.
2. TERMINATION TABLE: TT52-027027-000
3. UNIT IS SHOWN WIRED FOR 117 VAC OPERATION. FOR 234 VAC OPERATION; CHANGE FUSE "F1" TO 1/8 AMP, DISCONNECT "T1-WHT" FROM "TB1-1", DISCONNECT "T1-WHT/BLK" FROM "S1-2", DISCONNECT "E1" FROM "TB1-3", CONNECT "T1-WHT" AND "T1-WHT/BLK" TO "TB1-2".

ITEM NO	QTY	DESCRIPTION	PART NO

LIST OF MATERIALS

		DO NOT SCALE THIS DRAWING
		DIMENSION IN INCHES UNLESS OTHERWISE INDICATED
		TOLERANCES UNLESS OTHERWISE INDICATED
		DECIMALS: .X ± ; .XX ± ; .XXX ± ; FRACTIONS ± ; ANGLES ±
01-027026	CP-1500D	
NEXT ASSY.	USED ON	
APPLICATION		

DRAWN BY Rob Thomas DATE 8/
CHECKED Jay Lawler DATE 11-
APPROVED Paul Stein DATE 11-6-81

BTS

BTS BROADCAST TELEVISION SYSTEMS, INC.
A Joint Company of Bosch and Philips

These materials are and contain confidential and trade secret information of Fernseh Inc. Neither they nor the information they contain shall be copied, reproduced, or disclosed to persons not having a need to know for Fernseh Inc. business purposes or used except for such purposes without prior written permission of Fernseh Inc.

© Copyright 1980 Fernseh Inc. All rights reserved.

INTERCONNECTION DIAGRAM

SIZE	REV	DWG. NO.
D	B	51-027028-000

SCALE: 1/1 SHEET 1 OF 1

7-4

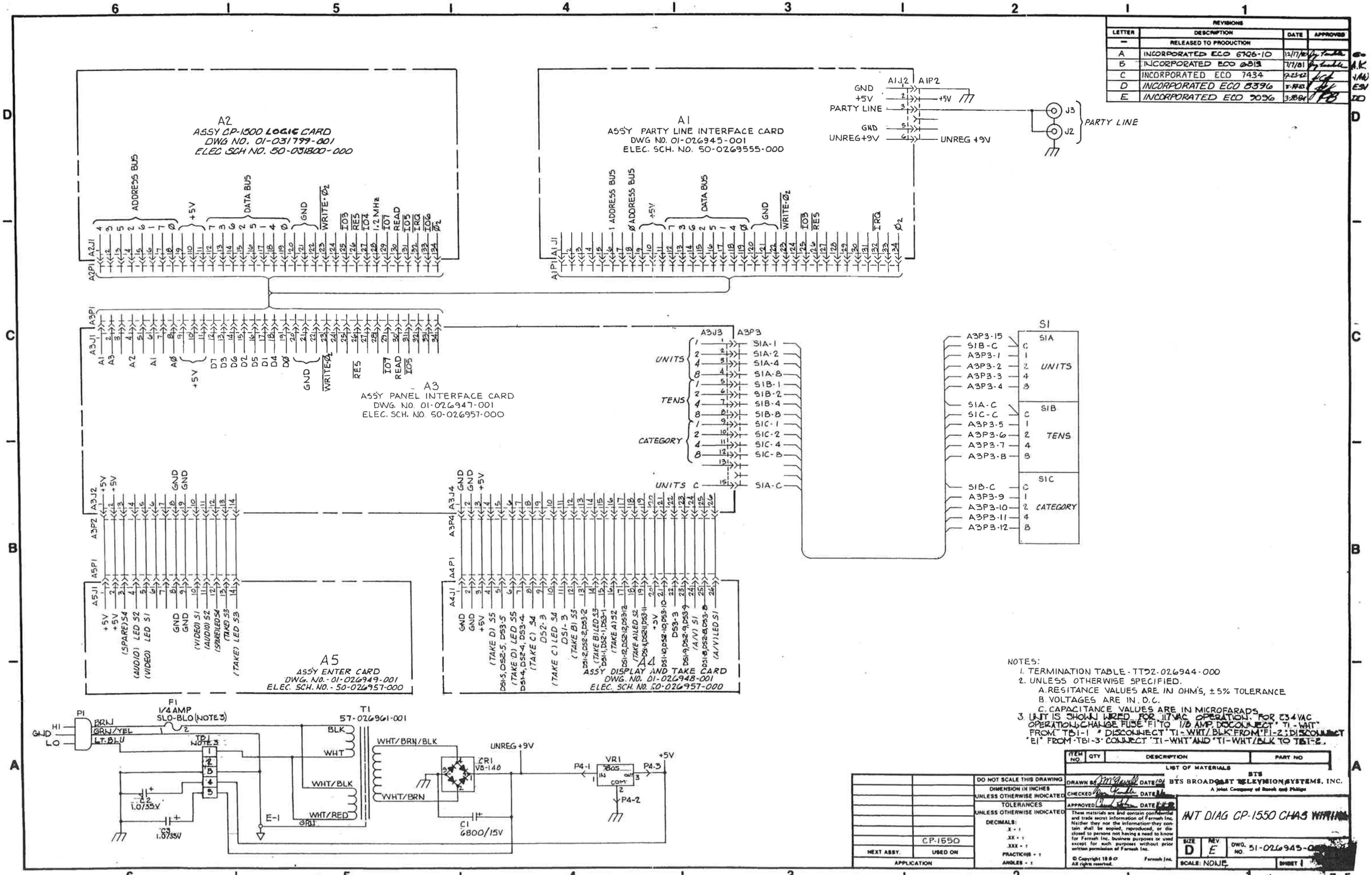

REVISIONS			
LETTER	DESCRIPTION	DATE	APPROVED
—	RELEASED TO PRODUCTION		
A	INCORPORATED ECO 6726-10	12/17/80	
B	INCORPORATED ECO 6819	7/7/81	
C	INCORPORATED ECO 7434	7-23-82	
D	INCORPORATED ECO 8396	8-19-83	
E	INCORPORATED ECO 9096	3-28-84	

NOTES:
1. TERMINATION TABLE - TT52-026944-000
2. UNLESS OTHERWISE SPECIFIED.
   A. RESITANCE VALUES ARE IN OHM'S, ±5% TOLERANCE
   B. VOLTAGES ARE IN D.C.
   C. CAPACITANCE VALUES ARE IN MICROFARADS
3. UNIT IS SHOWN WIRED FOR 117VAC OPERATION. FOR 234VAC OPERATION, CHANGE FUSE "F1" TO 1/8 AMP. DISCONNECT "T1-WHT" FROM "TB1-1" & DISCONNECT "T1-WHT/BLK" FROM "F1-2"; DISCONNECT "E1" FROM "TB1-3" CONNECT "T1-WHT" AND "T1-WHT/BLK" TO "TB1-2".

ITEM NO.	QTY	DESCRIPTION	PART NO

LIST OF MATERIALS

DO NOT SCALE THIS DRAWING
DIMENSION IN INCHES UNLESS OTHERWISE INDICATED
TOLERANCES UNLESS OTHERWISE INDICATED
DECIMALS: .X = ± .XX = ± .XXX = ± FRACTIONS = ± ANGLES = ±

NEXT ASSY.	USED ON
	CP-1550

APPLICATION

DRAWN BY: DATE
CHECKED: DATE
APPROVED: DATE

BTS
BTS BROADCAST TELEVISION SYSTEMS, INC.
A joint Company of Bosch and Philips

These materials are and contain confidential and trade secret information of Farnsch Inc. Neither they nor the information they contain shall be copied, reproduced, or disclosed to persons not having a need to know for Farnsch Inc. business purposes or used except for such purposes without prior written permission of Farnsch Inc.

© Copyright 1980 All rights reserved. Farnsch Inc.

INT DIAG CP-1550 CHAS WIRING

SIZE D | REV E | DWG. NO. 51-026945-0[illegible]
SCALE: NONE | SHEET 1

REVISIONS				
LETTER	DESCRIPTION	DATE	APPROVED	
—	RELEASED TO PRODUCTION			
A	INCORPORATED ECO NO. 6706-9	7 JAN 81	[illegible]	WD
E	INCORPORATED ECO 9096	3-20-84	[illegible]	DD
F	INCORPORATED ECO 10131	[illegible]	[illegible]	EV
G	INCORPORATED ECO 10591	1-2-85	[illegible]	EV

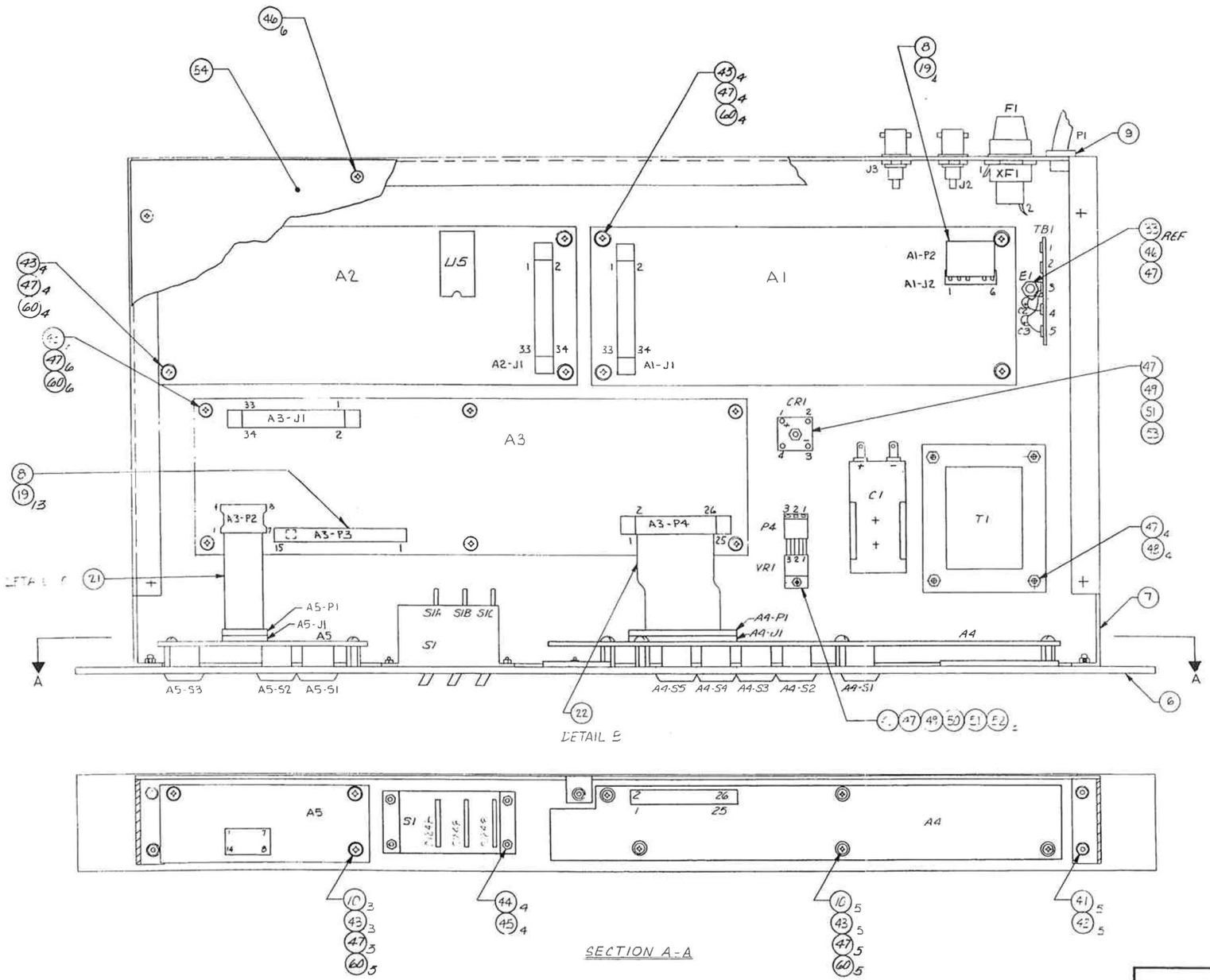

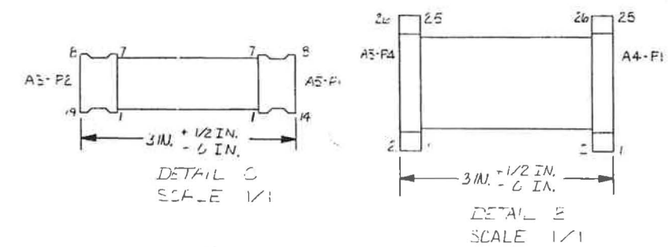

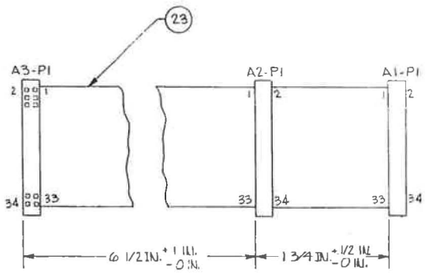

NOTES:
1. BILL OF MATERIALS: BCM01-026942 TAB
2. TERMINATION TABLE - TT52-026944-000
3. INTERCONNECTION DIA. - 51-026943-000
4. TAG WITH PART NUMBER, WORK ORDER NUMBER AND DATE.

ITEM NO	QTY	DESCRIPTION	PART NO

LIST OF MATERIALS

DO NOT SCALE THIS DRAWING
DIMENSION IN INCHES UNLESS OTHERWISE INDICATED
TOLERANCES UNLESS OTHERWISE INDICATED
DECIMALS: .X ± .XX ± .XXX ± FRACTIONS ± ANGLES ±

NEXT ASSY	USED ON
	CP-1550
APPLICATION	

DRAWN BY [illegible] DATE [illegible]
CHECKED [illegible] DATE [illegible]
APPROVED [illegible] DATE [illegible]

BTS
BTS BROADCAST TELEVISION SYSTEMS, INC.
A Joint Company of Bosch and Philips

These materials are and contain confidential and trade secret information of Fernseh Inc. Neither they nor the information they contain shall be copied, reproduced, or disclosed to persons not having a need to know for Fernseh Inc. business purposes or used except for such purposes without prior written permission of Fernseh Inc.
© Copyright 1980 Fernseh Inc. All rights reserved.

ASSY CP-1550 CNTRL PNL

SIZE D | REV G | DWG NO 01-026942-001
SCALE 1/1 | SHEET 1 OF 1

REVISIONS				
LETTER	DESCRIPTION	DATE	APPROVED	
–	RELEASED FOR PRODUCTION			
A	INCORPORATED ECO 9104	2/23/84	PB	DHD
B	INCORPORATED ECO 9207	4-13-84	PB	DHD
C	INCORPORATED ECO 9239	5-11-84	PB	ISV
D	INCORPORATED ECO 10664	3-11-85	PB	ISV

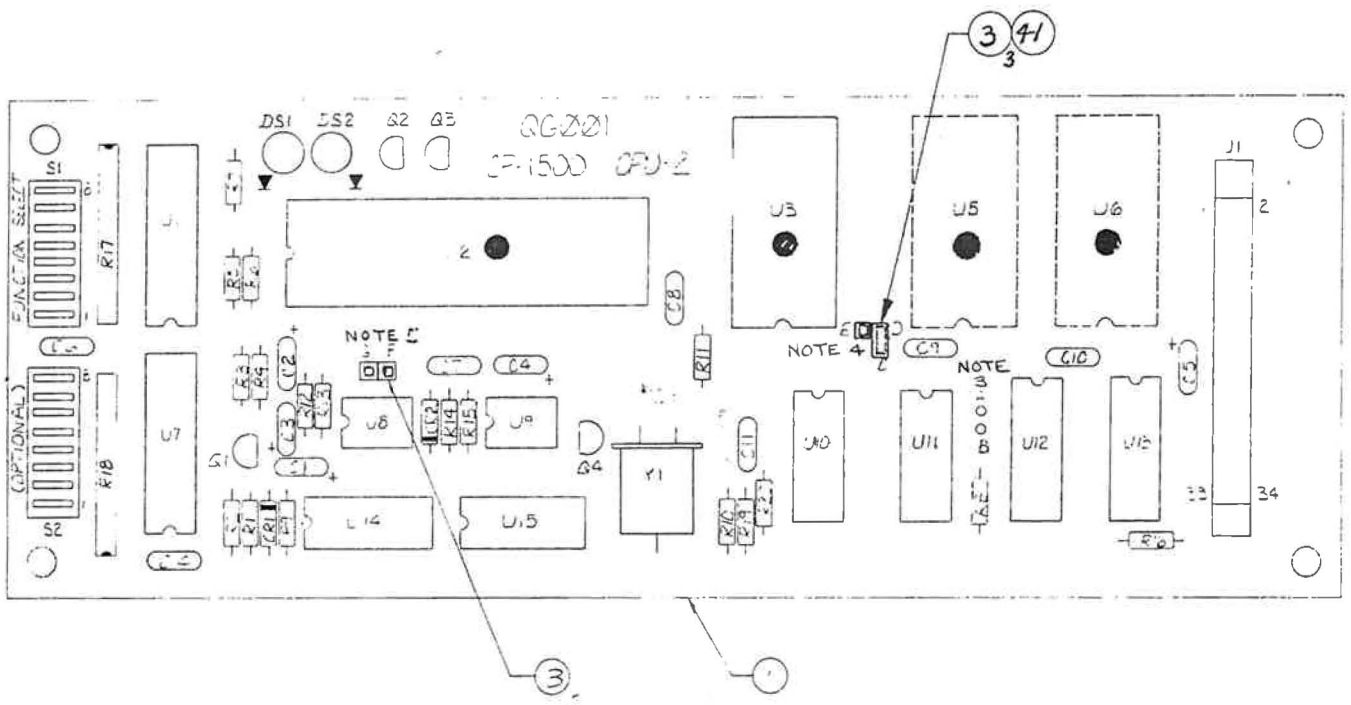

NOTES:
1. [illegible] MATERIALS SPEC-78B-00.
2. [illegible] SCHEMATIC 01-031800-000.
3. REMOVE JUMPER A TO B FOR ENGINEERING PURPOSES.
4. NORMALLY JUMPED FOR 16K PROMS FROM C TO D. FOR OPTIONAL 32K PROMS, JUMPER FROM D TO E.
5. JUMPER F TO G FOR TEST PURPOSES.
6. [illegible] WITH PART NUMBER, NUMBER AND DATE.

ITEM NO	QTY	DESCRIPTION	PART NO
		LIST OF MATERIALS	

—	CP-1500
NEXT ASSY.	USED ON
APPLICATION	

DO NOT SCALE THIS DRAWING
DIMENSIONS IN INCHES UNLESS OTHERWISE INDICATED
TOLERANCES UNLESS OTHERWISE INDICATED
DECIMALS: X ± XX = ± XXX = ±
FRACTIONS = ±
ANGLES = ±

DRAWN BY [illegible] DATE [illegible]
CHECKED [illegible] DATE 8-9-
APPROVED [illegible] DATE 8-11-8

These materials are and contain confidential and trade secret information of Fernseh Inc. Neither they nor the information they contain shall be copied, reproduced, or disclosed to persons not having a need to know for Fernseh Inc. business purposes or used except for such purposes without prior written permission of Fernseh Inc.
© Copyright 1983 All rights reserved. Fernseh Inc.

BTS
BTS BROADCAST TELEVISION SYSTEMS, INC.
A Joint Company of Bosch and Philips

ASSY CP-1500
LOGIC CARD QG0001

SIZE	REV.	DWG NO.
C	D	01-031799-001

SCALE: 2/1 SHEET 1 OF 1

REVISIONS				
LETTER	DESCRIPTION	DATE	APPROVED	
—	RELEASED TO PRODUCTION			
A	INCORPORATED ECO 9104	2/23/84	PB	DHD
B	INCORPORATED ECO 9207	4/13/84	PB	DHD
C	INCORPORATED ECO 10664	3/11/85	PB	EV

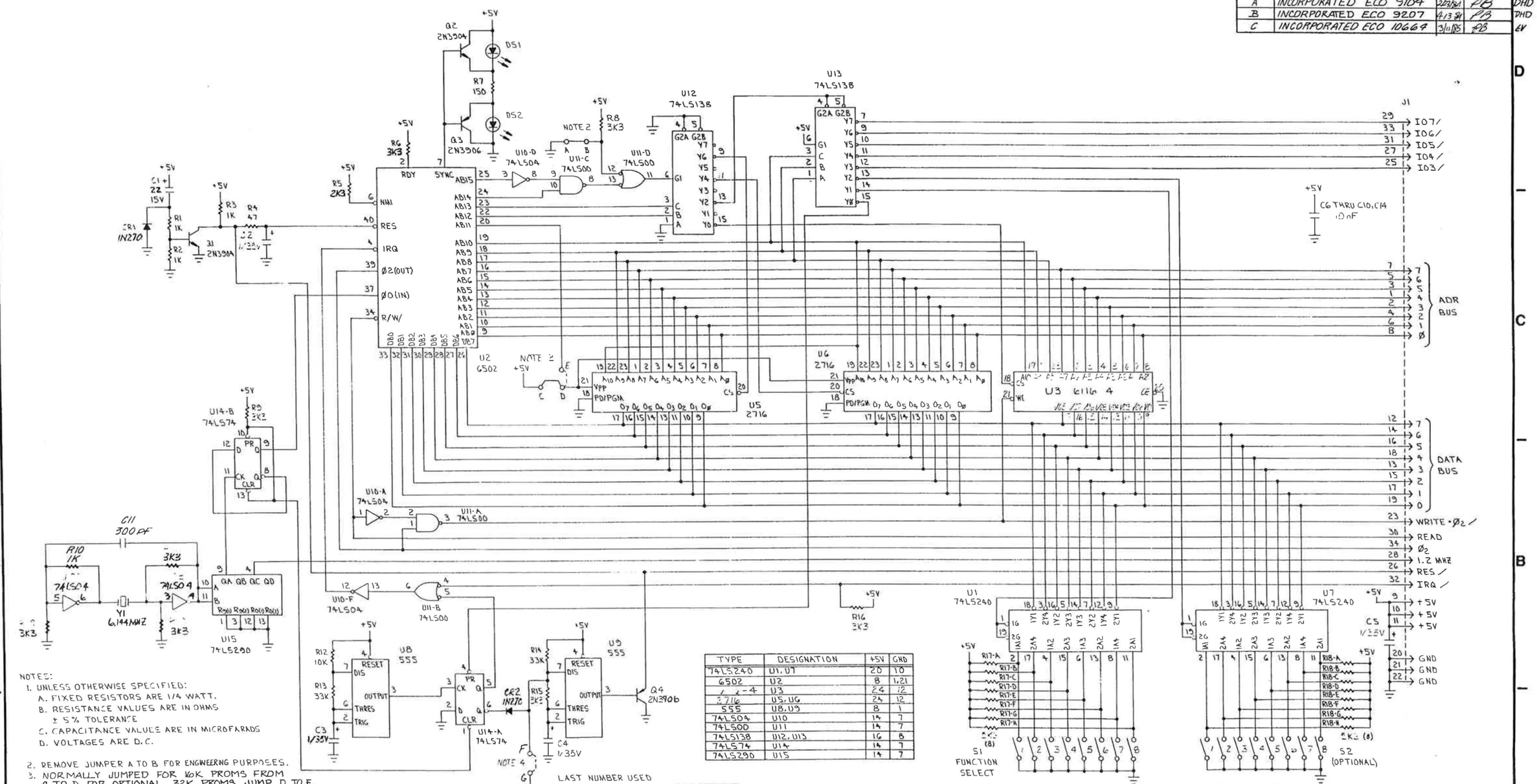

NOTES:
1. UNLESS OTHERWISE SPECIFIED:
   A. FIXED RESISTORS ARE 1/4 WATT.
   B. RESISTANCE VALUES ARE IN OHMS ± 5% TOLERANCE
   C. CAPACITANCE VALUES ARE IN MICROFARADS
   D. VOLTAGES ARE D.C.
2. REMOVE JUMPER A TO B FOR ENGINEERING PURPOSES.
3. NORMALLY JUMPED FOR 16K PROMS FROM C TO D. FOR OPTIONAL 32K PROMS JUMP D TO E.
4. [illegible]

TYPE	DESIGNATION	+5V	GND
74LS240	U1, U7	20	10
6502	U2	8	1,21
[illegible]	U3	24	12
2716	U5, U6	24	12
555	U8, U9	8	1
74LS04	U10	14	7
74LS00	U11	14	7
74LS138	U12, U13	16	8
74LS74	U14	14	7
74LS290	U15	14	7

LAST NUMBER USED

COMPONENT	DESIG.	OMITTED
I.C.	U15	U14
RESISTOR	R20	—
CAPACITOR	C14	C12, C13
TRANSISTOR	Q4	—
DIODE	CR2	—
CRYSTAL	Y1	—
SWITCH	S2	—
LED	DS2	—

QG001 ASSY CP-1500 LOGIC CARD
[illegible] 01-031799-001

NEXT ASSY	USED ON
—	CP-1500D
—	CP-1500/2
—	CP-1500/1
—	CP-1550

APPLICATION

DO NOT SCALE THIS DRAWING
DIMENSION IN INCHES UNLESS OTHERWISE INDICATED
TOLERANCES UNLESS OTHERWISE INDICATED
DECIMALS: .X = ± .XX = ± .XXX = ±
FRACTIONS = ±
ANGLES = ±

ITEM NO	QTY	DESCRIPTION	PART NO

LIST OF MATERIALS

DRAWN BY [signature] DATE [illegible]
CHECKED [signature] DATE [illegible]
APPROVED [signature] DATE 8-11-83

BTS
BTS BROADCAST TELEVISION SYSTEMS, INC.
A Joint Company of Bosch and Philips

These materials are and contain confidential and trade secret information of Fernseh Inc. Neither they nor the information they contain shall be copied, reproduced, or disclosed to persons not having a need to know for Fernseh Inc. business purposes or used except for such purposes without prior written permission of Fernseh Inc.
© Copyright 1983 All rights reserved. Fernseh Inc.

SCHEM
CP-1500 LOGIC CARD (QG001)

SIZE D | REV D | DWG. NO. 50-031800-000
SCALE: NONE | SHEET 1 OF 1

REVISIONS			
LETTER	DESCRIPTION	DATE	APPROVED
–	RELEASED FOR PRODUCTION		
A	INCORPORATED ECO 11051	[illegible]	[illegible]
B	INCORPORATED ECO [illegible]	[illegible]	[illegible]
C	INCORPORATED ECO 11085	1-8-86	[illegible]

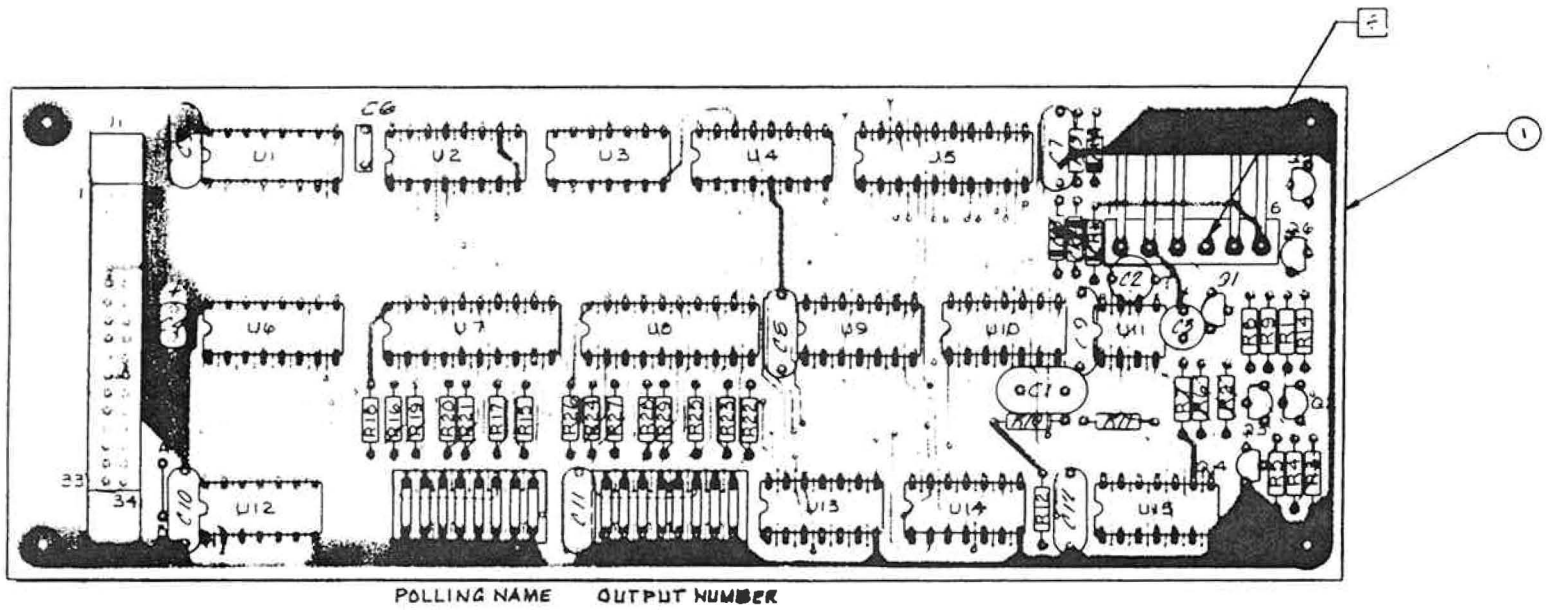

POLLING NAME OUTPUT NUMBER

NOTES:
1. BILL OF MATERIALS: BOM01-026945-001.
2. ELECTRICAL SCHEMATIC: 50-026955-000.
3. INTERCONNECTION DIAGRAM CP-1520; 51-027028-000.
   CP-1500; 51-026967-000.
   CP-550; 51-026943-000.
4. TAG WITH PART NO. WORK ORDER NO. AND DATE.
5. REMOVE JUMPER A TO B FOR TESTING PURPOSES.
2. REMOVE PIN 4 ON J2 FOR KEYING PURPOSES

ITEM NO.	QTY	DESCRIPTION	PART NO

LIST OF MATERIALS

[illegible]	[illegible]
CP-1500/2	
CP-1500/1	01-026960
CP-1550	01-026942
USED ON	NEXT ASSY.

APPLICATION

DO NOT SCALE THIS DRAWING
DIMENSIONS IN INCHES
UNLESS OTHERWISE INDICATED
TOLERANCES
UNLESS OTHERWISE INDICATED
DECIMALS
X ±
.XX = ±
.XXX = ±
FRACTIONS = ±
ANGLES = ±

DRAWN BY [illegible] DATE 4/22
CHECKED [illegible] DATE [illegible]
APPROVED [illegible] DATE [illegible]

These materials are and contain confidential and trade secret information of Farnsworth Inc. Neither they nor the information they contain shall be copied, reproduced, or disclosed to persons not having a need to know for Farnsworth Inc. business purposes or used except for such purposes without prior written permission of Farnsworth Inc.
© Copyright 1990 Farnsworth Inc.
All rights reserved.

BTS
BTS BROADCAST TELEVISION SYSTEMS, INC.
A joint Company of Bosch and Philips

ASSY CP-1500 PRTY LN INTF CARD
(A1)

SIZE	REV.	DWG. NO.
C	C	01-026945-001

SCALE: 2/1 SHEET 1 OF 1

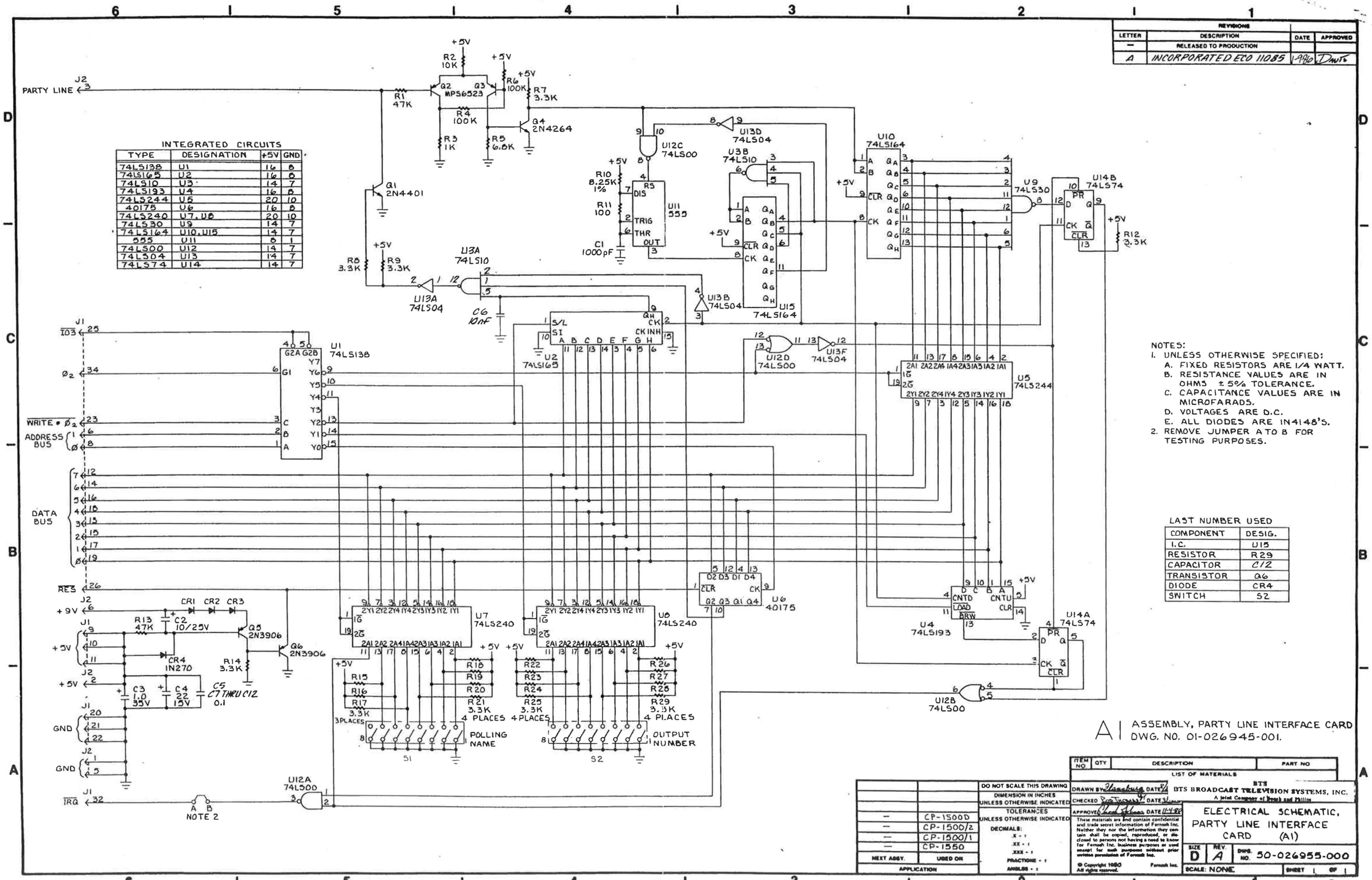

INTEGRATED CIRCUITS

TYPE	DESIGNATION	+5V	GND
74LS138	U1	16	8
74LS165	U2	16	8
74LS10	U3	14	7
74LS193	U4	16	8
74LS244	U5	20	10
40175	U6	16	8
74LS240	U7, U8	20	10
74LS30	U9	14	7
74LS164	U10, U15	14	7
555	U11	8	1
74LS00	U12	14	7
74LS04	U13	14	7
74LS74	U14	14	7

NOTES:
1. UNLESS OTHERWISE SPECIFIED:
   A. FIXED RESISTORS ARE 1/4 WATT.
   B. RESISTANCE VALUES ARE IN OHMS ± 5% TOLERANCE.
   C. CAPACITANCE VALUES ARE IN MICROFARADS.
   D. VOLTAGES ARE D.C.
   E. ALL DIODES ARE 1N4148'S.
2. REMOVE JUMPER A TO B FOR TESTING PURPOSES.

LAST NUMBER USED

COMPONENT	DESIG.
I.C.	U15
RESISTOR	R29
CAPACITOR	C12
TRANSISTOR	Q6
DIODE	CR4
SWITCH	S2

A1 ASSEMBLY, PARTY LINE INTERFACE CARD DWG. NO. 01-026945-001.

REVISIONS			
LETTER	DESCRIPTION	DATE	APPROVED
—	RELEASED TO PRODUCTION		
A	INCORPORATED ECO 11085	1-9-86	Davis

ITEM NO.	QTY	DESCRIPTION	PART NO

LIST OF MATERIALS

NEXT ASSY.	USED ON
—	CP-1500D
—	CP-1500/2
—	CP-1500/1
—	CP-1550

APPLICATION

DO NOT SCALE THIS DRAWING
DIMENSION IN INCHES UNLESS OTHERWISE INDICATED
TOLERANCES UNLESS OTHERWISE INDICATED
DECIMALS: .X - ± .XX - ± .XXX - ± FRACTIONS - ± ANGLES - ±

DRAWN BY Hanabusa DATE 8/4
CHECKED [illegible] DATE 8/
APPROVED [illegible] DATE 11-4-86

These materials are and contain confidential and trade secret information of Fernseh Inc. Neither they nor the information they contain shall be copied, reproduced, or disclosed to persons not having a need to know for Fernseh Inc. business purposes or used except for such purposes without prior written permission of Fernseh Inc.
© Copyright 1980 Fernseh Inc. All rights reserved.

BTS BROADCAST TELEVISION SYSTEMS, INC.
A joint Company of Bosch and Philips

ELECTRICAL SCHEMATIC, PARTY LINE INTERFACE CARD (A1)

SIZE D REV. A DWG. NO. 50-026955-000
SCALE: NONE SHEET 1 OF 1

REVISIONS			
LETTER	DESCRIPTION	DATE	APPROVED
–	RELEASED FOR PRODUCTION	1-27-84	
A	INCORPORATED ECO NO. 6795-1	5-15-84	
B	INCORPORATED ECO 7480	9-10-86	
C	INCORPORATED ECO 10988	7/10/87	

Ref. Jake EV

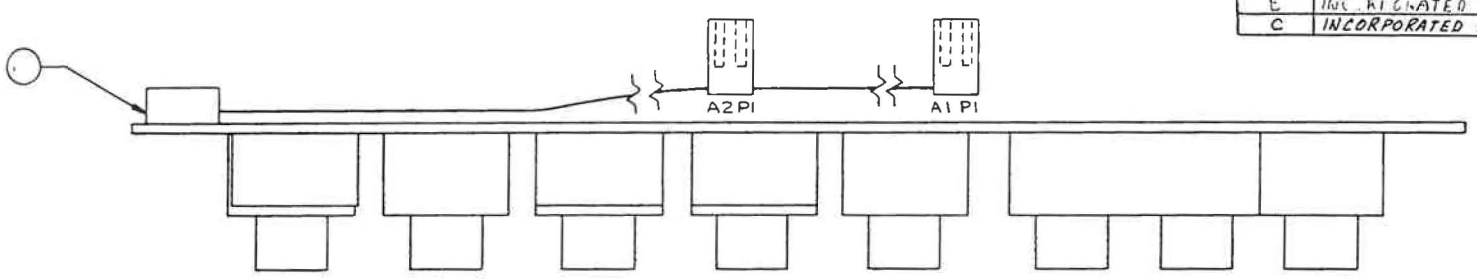

NOTES:
1. BILL OF MATERIALS: BOM01-026970-001.
2. ELECTRICAL SCHEMATIC: 50-026971-000.
3. INTERCONNECTION DIAGRAM: 31-026967-000.
4. TAG WITH PART NO. AND REVISION LETTER.

NEXT ASSY.	USED ON
01-026968	CP-1500D
01-026968	CP-1500/2
01-026968	CP-1500/1
APPLICATION	

DO NOT SCALE THIS DRAWING
DIMENSIONS IN INCHES UNLESS OTHERWISE INDICATED
TOLERANCES UNLESS OTHERWISE INDICATED
DECIMALS
X ±
.XX = ±
.XXX = ±
FRACTIONS = ±
ANGLES = ±

ITEM NO. | QTY | DESCRIPTION | PART NO
LIST OF MATERIALS

DRAWN BY Hendrix DATE 7/11
CHECKED [illegible] DATE 11/5/90
APPROVED [illegible] DATE 11-4-90

Three materials and and contain confidential and trade secret information of Fernseh Inc. Neither they nor the information they contain shall be copied, reproduced, or disclosed to persons not having a need to know for Fernseh Inc. business purposes or used except for such purposes without prior written permission of Fernseh Inc.

© Copyright 1980 Fernseh Inc. All rights reserved.

BTS
BTS BROADCAST TELEVISION SYSTEMS, INC.
A Joint Company of Bosch and Philips

ASSEMBLY, DISPLAY AND KEYBOARD CARD (A3)

SIZE	REV.	DWG. NO.
C	C	01-026970-001

SCALE: 2/1 SHEET 1 OF 1

REVISIONS			
LETTER	DESCRIPTION	DATE	APPROVED
—	RELEASED TO PRODUCTION		

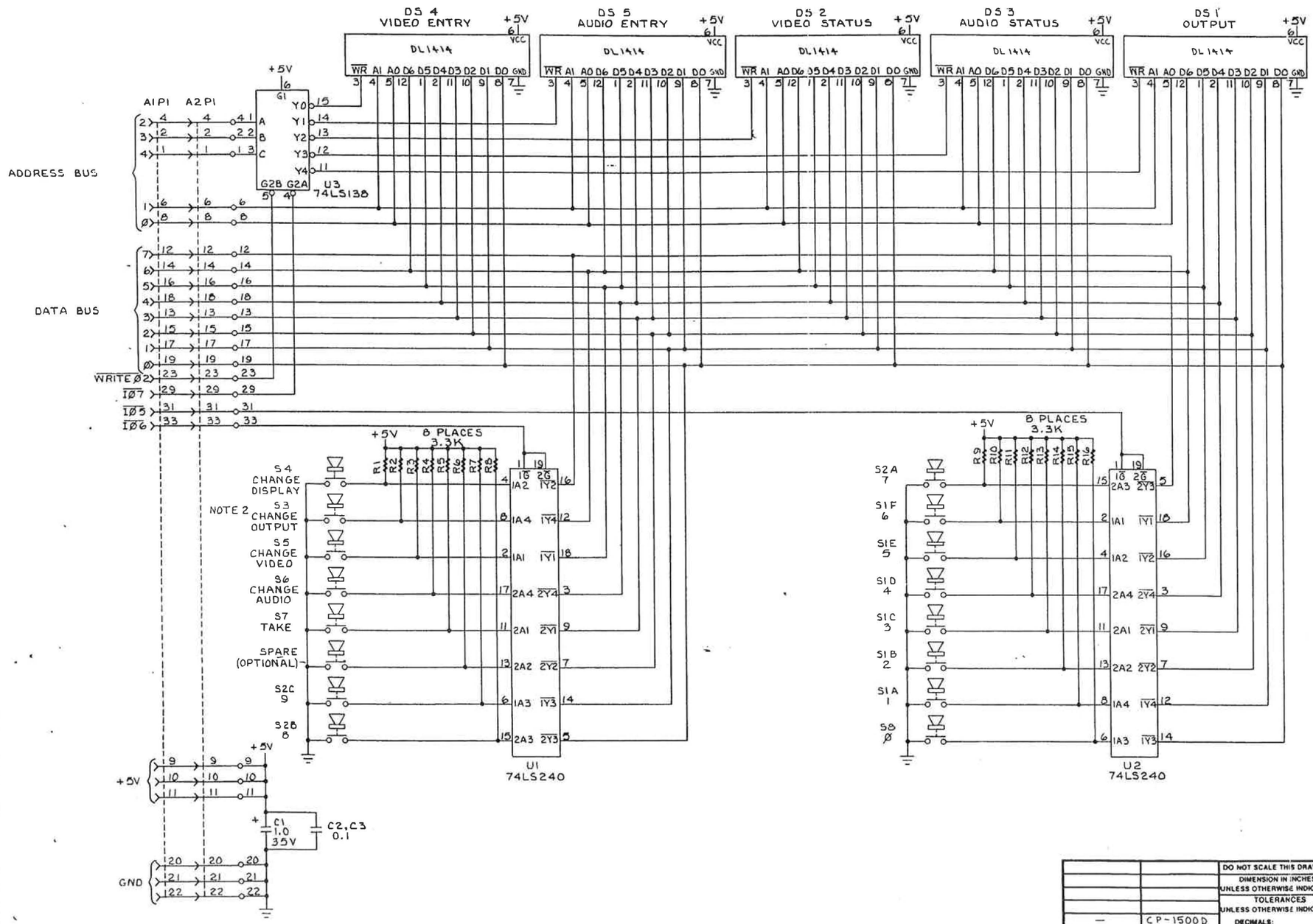

INTEGRATED CIRCUITS

TYPE	COMPONENT	+5V	GND
74LS240	U1, U2	20	10
74LS138	U3	16	8

1. UNLESS OTHERWISE SPECIFIED:
   A. FIXED RESISTORS ARE 1/4 WATT.
   B. RESISTANCE VALUES ARE IN OHMS, ±5% TOLERANCE.
   C. CAPACITANCE VALUES ARE IN MICROFARADS.
   D. VOLTAGES ARE D.C.
2. THIS BUTTON MAY NOT BE INCLUDED ON ALL CP1500'S. IN THESE CASES, THE OUTPUT IS SPECIFIED BY THE PARTY LINE DIP SWITCH.

LAST NUMBER USED

COMPONENT	DESIG.
I.C.	U3
RESISTOR	R16
CAPACITOR	C3
READOUT	DS5
SWITCH	S3

A3 ASSEMBLY, DISPLAY AND KEYBOARD CARD
DWG. NO. 01-026970-001.

—	CP-1500D	DO NOT SCALE THIS DRAWING	
—	CP-1500/2	DIMENSION IN INCHES UNLESS OTHERWISE INDICATED	
—	CP-1500/1	TOLERANCES UNLESS OTHERWISE INDICATED	
NEXT ASSY	USED ON	DECIMALS: X ± .1, XX ± .1, XXX ± .1, FRACTIONS ± 1, ANGLES ± 1	
APPLICATION			

LIST OF MATERIALS

ITEM NO	QTY	DESCRIPTION	PART NO

DRAWN BY [illegible] DATE 8/5
CHECKED [illegible] DATE 8/5
APPROVED [illegible] DATE 8/5

BTS
BTS BROADCAST TELEVISION SYSTEMS, INC.
A Joint Company of Boosh and Philips

These materials are and contain confidential and trade secret information of Fernseh Inc. Neither they nor the information they contain shall be copied, reproduced, or disclosed to persons not having a need to know for Fernseh Inc. business purposes or used except for such purposes without prior written permission of Fernseh Inc.

© Copyright 1980 All rights reserved. Fernseh Inc.

ELECTRICAL SCHEMATIC, DISPLAY AND KEYBOARD CARD (A3)

SIZE	REV	DWG NO
D	—	50-026971-003

SCALE NONE SHEET 1 OF 1

7-13

REVISIONS			
LETTER	DESCRIPTION	DATE	APPROVED
—	RELEASED TO PRODUCTION		
A	INCORPORATED ECO 6706-3	12-19-80	[illegible]

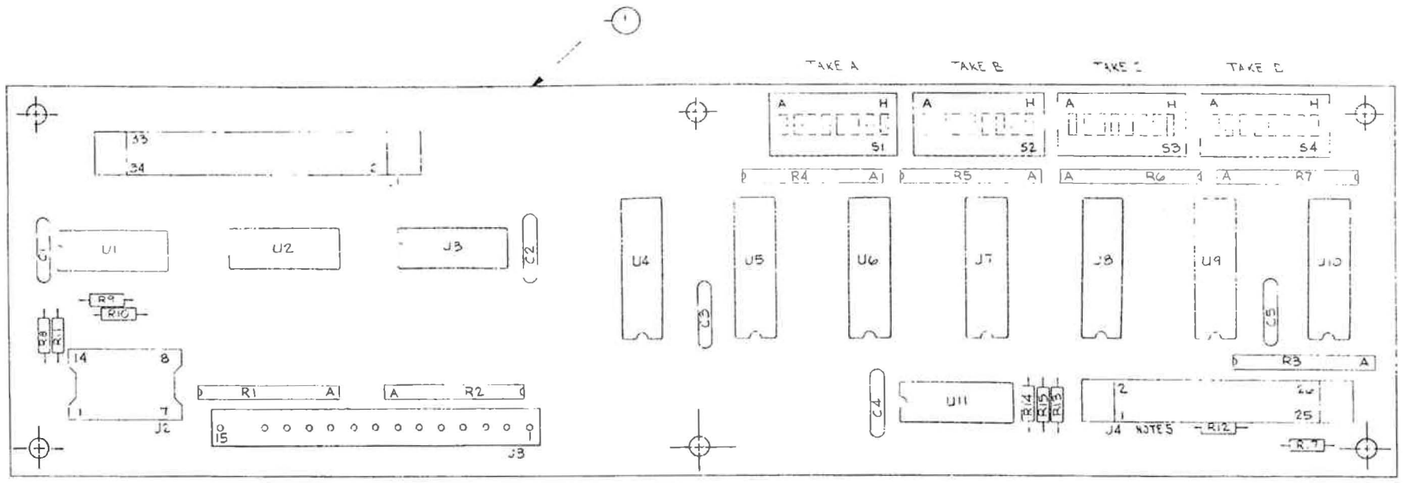

NOTES:
1. LIST OF MATERIALS: LM01-026947-001
2. ELECTRICAL SCHEMATIC: 50-026957-000
3. INTERCONNECTION DIAGRAM: 51-026943-000
4. TAG WITH PART NO. AND REVISION LETTER.
5. CONNECTOR J4 MOUNTED LONG PINS INTO BOARD AND LEADS TRIMMED OFF.

ITEM NO	QTY	DESCRIPTION	PART NO

LIST OF MATERIALS

NEXT ASSY	USED ON
01-026942	CP-1550

APPLICATION

DO NOT SCALE THIS DRAWING
DIMENSION IN INCHES UNLESS OTHERWISE INDICATED
TOLERANCES UNLESS OTHERWISE INDICATED
DECIMALS
X
XX
XXX
FRACTIONS
ANGLES

DRAWN BY [illegible] DATE 10
CHECKED [illegible] DATE [illegible]
APPROVED [illegible] DATE [illegible]

These materials are and contain confidential and trade secret information of Fernseh Inc. Neither they nor the information they contain shall be copied, reproduced, or disclosed to persons not having a need to know for Fernseh Inc. business purposes or used except for such purposes without prior written permission of Fernseh Inc.

© Copyright 1980 Fernseh Inc. All rights reserved

BTS
BTS BROADCAST TELEVISION SYSTEMS, INC.
A joint Company of Bosch and Philips

ASSEMBLY, PANEL INTERFACE CARD (A3)

SIZE D | REV A | DWG NO 01-026947-001

SCALE 2/1 | SHEET 1 OF 1

REVISIONS			
LETTER	DESCRIPTION	DATE	APPROVED
–	RELEASED FOR PRODUCTION		
A	INCORPORATED ECO 6706-1	12-22-80	by Formerly
B	INCORPORATED ECO 6741-1	8-81	

STD WD

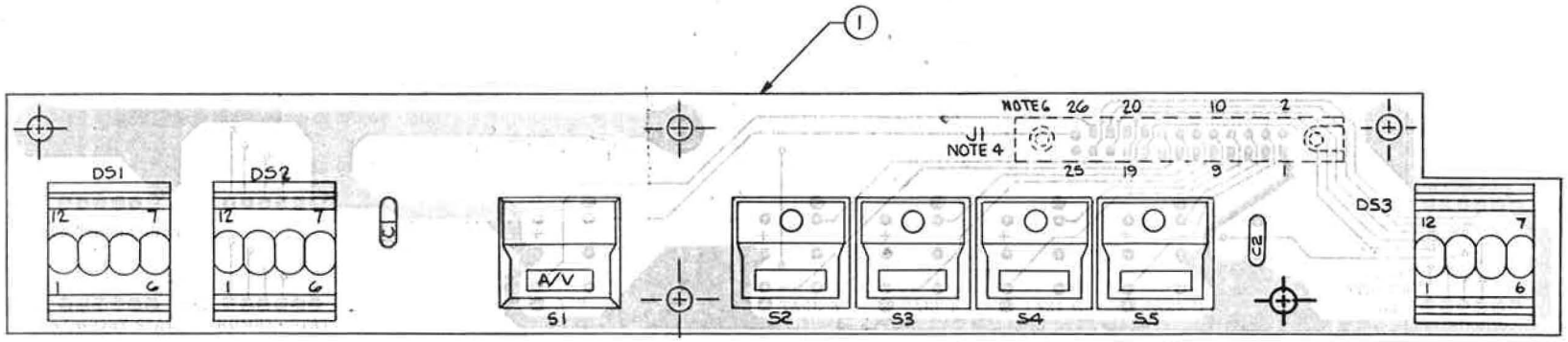

NOTES:
1. LIST OF MATERIALS: LM01-026948-001.
2. ELECTRICAL SCHEMATIC: 50-026957-000.
3. INTERCONNECTION DIAGRAM: 51-026943-000.
4. MOUNT J1 ON DIP SIDE OF BOARD.
5. TYPE DESIGNATED ABBREVIATION "A/V" ON LABEL THAT IS SUPPLIED WITH SWITCH S1. BLANK LABELS ARE SUPPLIED WITH SWITCHES S2 THRU S5 AND ARE TO BE NAMED BY CUSTOMER.
6. MOUNT CONNECTOR J1 LONG PINS INTO BOARD AND TRIM LEADS OFF.
7. TAG WITH PART NO AND REVISION LETTER.

ITEM NO.	QTY	DESCRIPTION	PART NO

LIST OF MATERIALS

01-026942-	CP-1550
NEXT ASSY.	USED ON
APPLICATION	

DO NOT SCALE THIS DRAWING
DIMENSIONS IN INCHES UNLESS OTHERWISE INDICATED
TOLERANCES UNLESS OTHERWISE INDICATED
DECIMALS:
X ±
XX = ±
XXX = ±
FRACTIONS = ±
ANGLES = ±

DRAWN BY M Garrell DATE 10/6
CHECKED Jay Fenble DATE 10-14-
APPROVED Chas Johns DATE 11-11-80

These materials are and contain confidential and trade secret information of Farnsah Inc. Neither they nor the information they contain shall be copied, reproduced, or disclosed to persons not having a need to know for Farnsah Inc. business purposes or used except for such purposes without prior written permission of Farnsah Inc.

© Copyright 1980 Farnsah Inc. All rights reserved.

BTS
BTS BROADCAST TELEVISION SYSTEMS, INC.
A Joint Company of Bosch and Philips

ASSEMBLY, DISPLAY AND TAKE CARD (A4)

SIZE	REV.	DWG. NO.
C	B	01-026948-001

SCALE: 2/1 SHEET 1 OF 1

REVISIONS			
LETTER	DESCRIPTION	DATE	APPROVED
—	RELEASED FOR PRODUCTION		

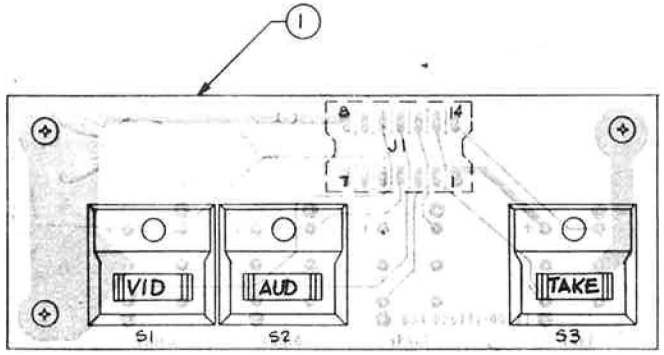

NOTES:
1. LIST OF MATERIALS-LM01-026949-001
2. ELECTRICAL SCHEMATIC: 50-026957-000
3. INTERCONNECTION DIAGRAM: 51-026943-000
4. MOUNT J1 ON DIP SIDE OF BOARD.
5. TAG WITH PART NO AND REVISION LETTER
6. TYPE DESIGNATED ABBREVIATION VID, AUD, AND TAKE ON LABELS THAT ARE SUPPLIED WITH SWITCHES S1 THRU S3.

ITEM NO.	QTY	DESCRIPTION	PART NO
		LIST OF MATERIALS	

01-026942	CP-1550
NEXT ASSY.	USED ON
APPLICATION	

DO NOT SCALE THIS DRAWING
DIMENSIONS IN INCHES UNLESS OTHERWISE INDICATED
TOLERANCES UNLESS OTHERWISE INDICATED
DECIMALS:
.X ±
.XX = ±
.XXX = ±
FRACTIONS = ±
ANGLES = ±

DRAWN BY McGowell DATE 10/8
CHECKED [signature] DATE 10-14-80
APPROVED [signature] DATE 11-11-80

These materials are and contain confidential and trade secret information of Fernseh Inc. Neither they nor the information they contain shall be copied, reproduced, or disclosed to persons not having a need to know for Fernseh Inc. business purposes or used except for such purposes without prior written permission of Fernseh Inc.

© Copyright 1980 All rights reserved. Fernseh Inc.

BTS
BTS BROADCAST TELEVISION SYSTEMS, INC.
A joint Company of Bosch and Philips

ASSEMBLY, ENTER CARD (A5)

SIZE C | REV. — | DWG. NO. 01-026949-001

SCALE: 2/1 | SHEET 1 OF 1

REVISIONS			
LETTER	DESCRIPTION	DATE	APPROVED
—	RELEASED TO PRODUCTION		
A	INCORPORATED ECO 6706	12-15-80	
B	INCORPORATED ECO 6741	3-81	

TYPE	DESIGNATION	+5V	GND
74LS240	U4, U5, U6, U7, U8, U9, U10	20	10
74LS138	U2, U3	16	8
74LS174	U1, U11	16	8

LAST NUMBER USED		NOT USED
A2		
COMPONENT	DESIG	
I.C.	11	
RESISTOR	R17	R16
CAPACITOR	C6	
SWITCH	S4	
A4		
SWITCH	S5	
LED	DS3	
A5		
SWITCH	S4	
FRONT PANEL		
SWITCH	S1	

NOTES:
1. UNLESS OTHERWISE SPECIFIED:
   A. FIXED RESISTORS ARE 1/4 WATT.
   B. RESISTANCE VALUES ARE IN OHMS ±5% TOLERANCE
   C. CAPACITANCE VALUES ARE IN MICROFARADS
   D. VOLTAGES ARE D.C.
2. S6-A5, S4-A4, NOT INSTALLED. FOR FUTURE USE ONLY

A5
ASSEMBLY, ENTER CARD
DWG. NO. 01-026949-001

A3
ASSEMBLY, PANEL INTERFACE CARD. DWG. NO. 01-026947-001

A4
ASSEMBLY, DISPLAY AND TAKE CARD, DWG NO. 01-026948-001

ITEM NO	QTY	DESCRIPTION	XPART NO

LIST OF MATERIALS

DRAWN BY ____ DATE ____
CHECKED ____ DATE ____
APPROVED ____ DATE ____

DO NOT SCALE THIS DRAWING
DIMENSION IN INCHES
UNLESS OTHERWISE INDICATED
TOLERANCES
UNLESS OTHERWISE INDICATED
DECIMALS:
.X - ±
.XX - ±
.XXX - ±
FRACTIONS - ±
ANGLES - ±

CP-1550
NEXT ASSY: USED ON
APPLICATION

Those materials are and contain confidential and trade secret information of Fermach Inc. Neither they nor the information they contain shall be copied, reproduced, or disclosed to persons not having a need to know for Fermach Inc. business purposes or used except for such purposes without prior written permission of Fermach Inc.
© Copyright 19xx
All rights reserved. Fermach Inc.

BTS BROADCAST TELEVISION SYSTEMS, INC.
A Joint Company of Ampex and Philips

ELECTRONIC SCHEMATIC, CONTROL AND INTERFACE CARDS (A3, A4, A5)

SIZE D | REV. B | DWG. NO. 50-026957-000 | SCALE: | SHEET 1 OF

REVISIONS			
LETTER	DESCRIPTION	DATE	APPROVED
—	RELEASED FOR PRODUCTION		

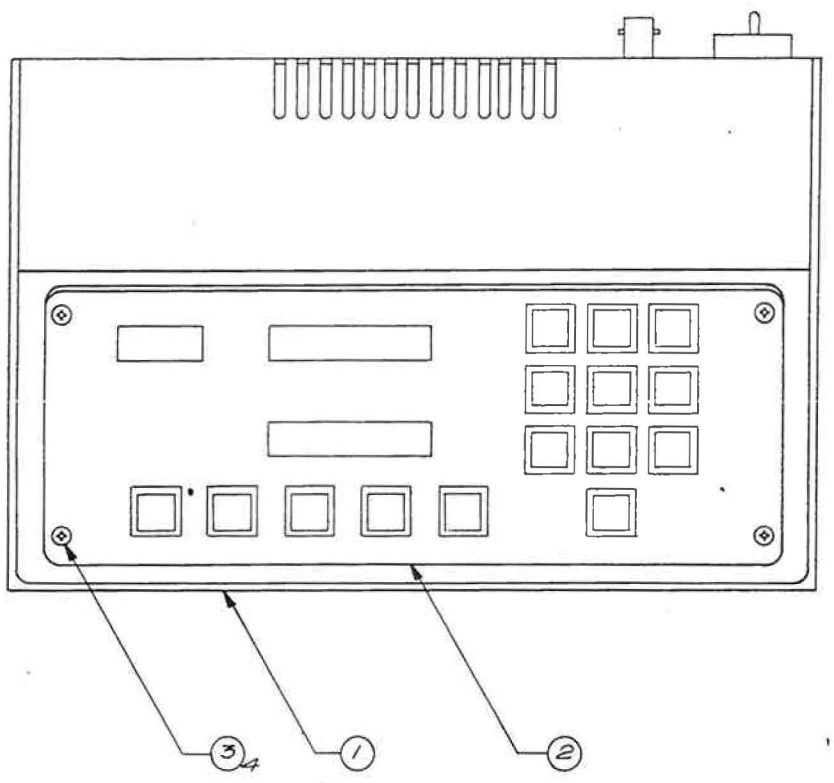

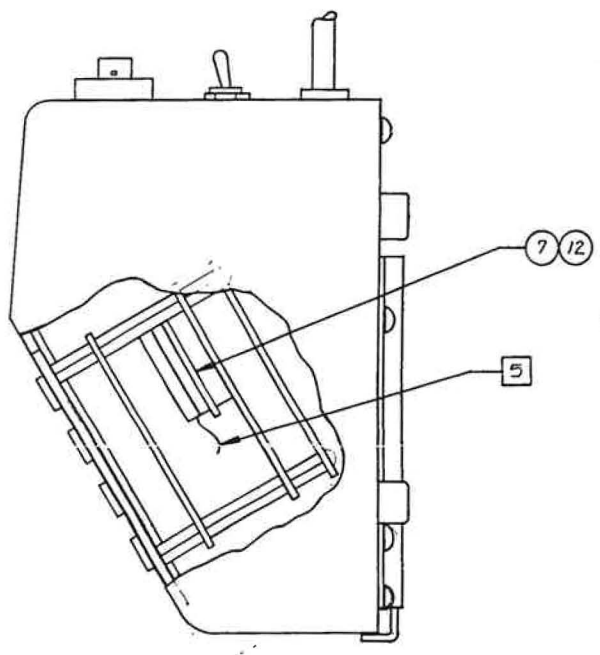

NOTES:
1. BILL OF MATERIALS: BOM F7-030800-TAB.
2. TERMINATION TABLE: 52-027027-000.
3. INTERCONNECTION DIAGRAM: 51-027028-000.
4. TAG WITH PART NO. WORK ORDER NO. AND DATE.
5. CUT PIN OFF WIRE ON MOD CARD QX0008 (ITEM 12) INSTALLED IN QG001U6. STRIP, TIN & SOLDER WIRE TO QG001U11-3.

ITEM NO	QTY	DESCRIPTION	PART NO

LIST OF MATERIALS

DASH	VOLT.	FUSE	REV. LTR	ECO	INIT. BY	APPR	DATE	NEXT ASSY.	USED ON
-007	220V	1/8AMP	—					—	CP-1501ADL/D
-003	117V	1/4AMP	A	11691	EV			—	CP-1501ADL/D

APPLICATION

DO NOT SCALE THIS DRAWING
DIMENSIONS IN INCHES UNLESS OTHERWISE INDICATED
TOLERANCES UNLESS OTHERWISE INDICATED
DECIMALS: X ±, XX = ±, XXX = ±
FRACTIONS = ±
ANGLES = ±

DRAWN BY DAVIS DATE 4-8-
CHECKED DATE
APPROVED DATE 4-10-87

BTS
BTS BROADCAST TELEVISION SYSTEMS, INC.
A joint Company of Bosch and Philips

These materials are and contain confidential and trade secret information of Farnsh Inc. Neither they nor the information they contain shall be copied, reproduced, or disclosed to persons not having a need to know for Farnsh Inc. business purposes or used except for such purposes without prior written permission of Farnsh Inc.

© Copyright 1987 Farnsh Inc. All rights reserved.

ASSY CP-1501ADL/D FNL
117V/220V

SIZE C | REV. TAB | DWG. NO. F7-030800-TAB

SCALE: 1/1 | SHEET 1 OF

REVISIONS			
LETTER	DESCRIPTION	DATE	APPROVED
—	RELEASED TO PRODUCTION		

SEE TABULATION TABLE

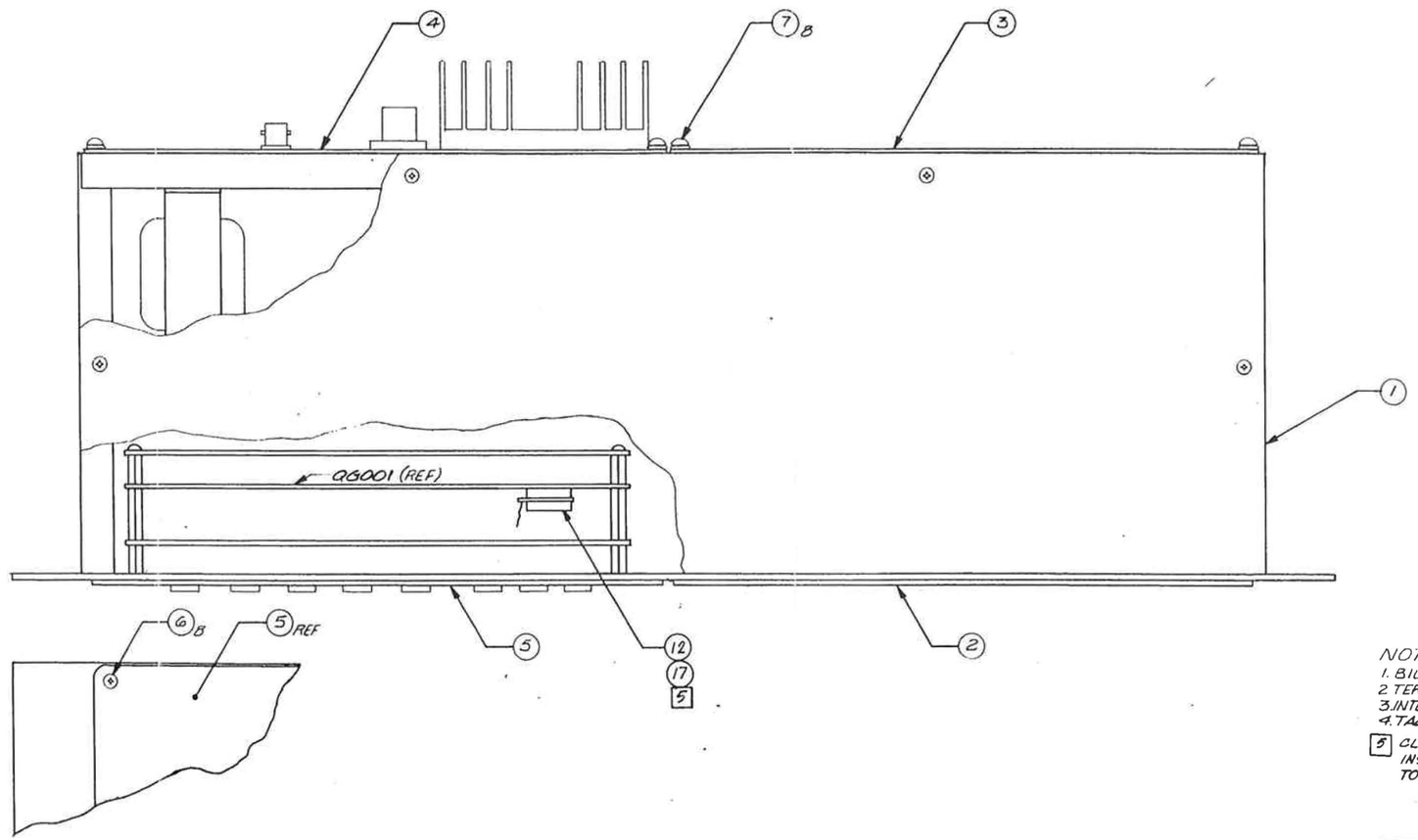

NOTES:
1. BILL OF MATERIALS: BOM F7-030800-TAB.
2. TERMINATION TABLE: 52-026966-000
3. INTERCONNECTION DIAGRAM: 51-026967-000
4. TAG WITH PART NO. WORK ORDER NO. AND DATE
5. CLIP PIN OFF WIRE ON MOD CARD QX008 (ITEM 17) INSTALLED IN QG00-U6. STRIP, TIN & SOLDER WIRE TO QG001-U11-3.

DASH NO.	DESCRIPTION	REV LET	ECO NUMBER	INC BY	DATE	APPROVED
-005	CP1501ADL/1 220V	A	11691			
-001	CP1501ADL/1 117V	A	11691			

TABULATION TABLE

NEXT ASSY	USED ON
	CP-1501ADL/1
	CP-1501ADL/1

APPLICATION

DO NOT SCALE THIS DRAWING
DIMENSION IN INCHES UNLESS OTHERWISE INDICATED
TOLERANCES UNLESS OTHERWISE INDICATED
DECIMALS:
.X ±
.XX ±
.XXX ±
FRACTIONS ±
ANGLES ±

ITEM NO	QTY	DESCRIPTION	PART NO

BTS
BTS BROADCAST TELEVISION SYSTEMS, INC.
A joint Company of Bosch and Philips

DRAWN BY Ken K DATE 3/87
CHECKED [illegible] DATE 4-1-87
APPROVED [illegible] DATE 4-3-87

These materials are and contain confidential and trade secret information of Fernseh Inc. Neither they nor the information they contain shall be copied, reproduced, or disclosed to persons not having a need to know for Fernseh Inc. business purposes or used except for such purposes without prior written permission of Fernseh Inc.

© Copyright 1987 Fernseh Inc. All rights reserved.

ASSY CP-1501ADL/1 FNL
117V / 220V

SIZE D | REV TAB | DWG NO F7-030800-TAB
SCALE 1/1 | SHEET 1 OF 1

REVISIONS			
LETTER	DESCRIPTION	DATE	APPROVED
—	RELEASED TO PRODUCTION		

SEE TABULATION TABLE SHEET 1 OF 2

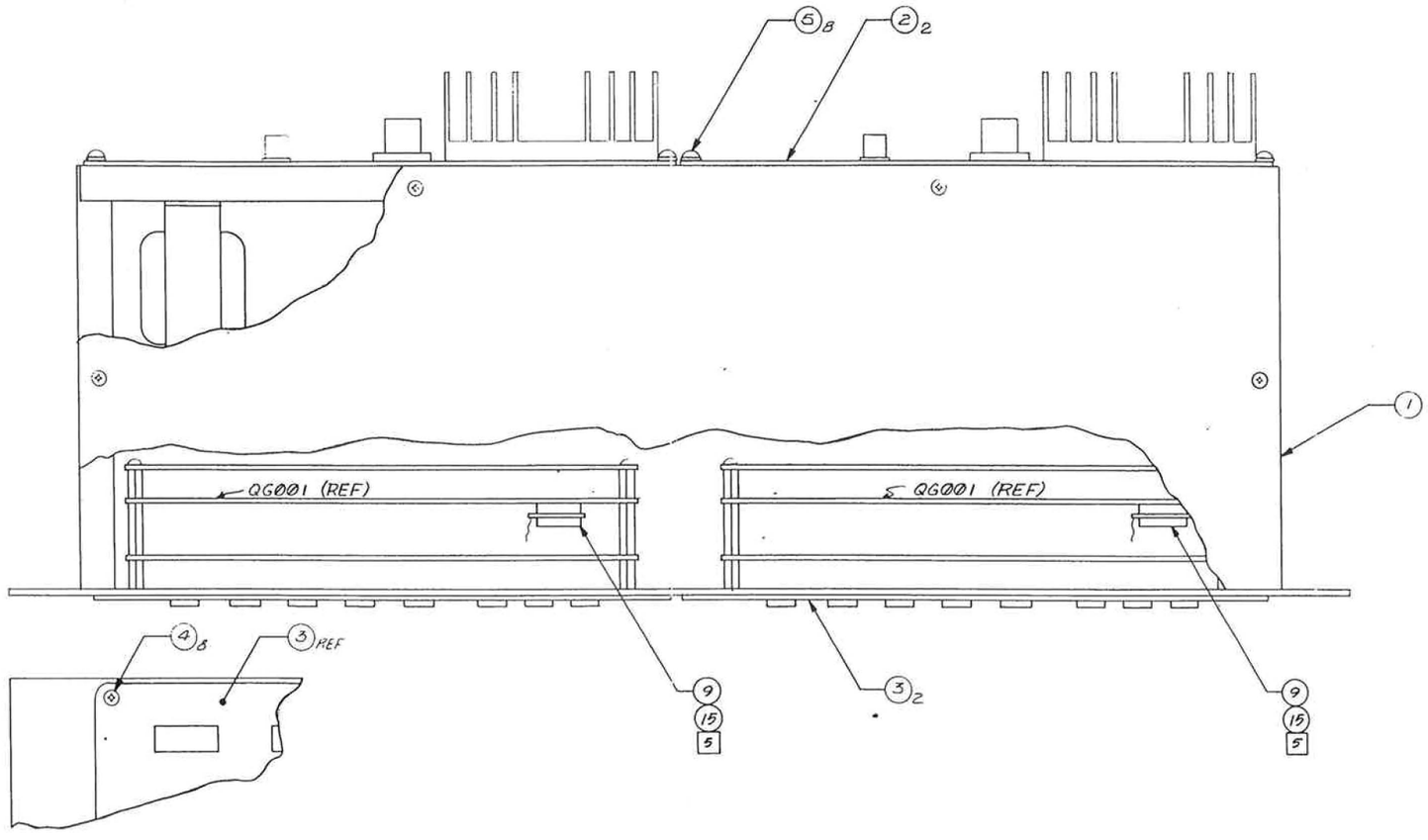

NOTES:

1. BILL OF MATERIALS: BOM F7-030800-TAB.
2. TERMINATION TABLE: 52-026966-000.
3. INTERCONNECTION DIAGRAM: 51-026967-000.
4. TAG WITH PART NO. WORK ORDER NO. & DATE.
5. CUT PIN OFF WIRE ON MOD CARD QX008 (ITEM 17) INSTALLED IN QG001-U6. STRIP, TIN & SOLDER WIRE TO QG001-U11-3.

DASH NO.	DESCRIPTION	REV LET.	ECO NO.	WC BY	DATE	APPVD.
-006	CP-1501ADL/2 220V	A	11691			
-002	CP-1501ADL/2 117V	A	11691			

TABULATION TABLE

NEXT ASSY	USED ON
	CP-1501ADL/2
	CP-1501ADL/2

APPLICATION

DO NOT SCALE THIS DRAWING
DIMENSION IN INCHES UNLESS OTHERWISE INDICATED
TOLERANCES UNLESS OTHERWISE INDICATED
DECIMALS: X = ± XX = ± XXX = ± FRACTIONS = ± ANGLES = ±

ITEM NO	QTY	DESCRIPTION	PART NO

BTS
BTS BROADCAST TELEVISION SYSTEMS, INC.
A joint Company of Bosch and Philips

DRAWN BY Kim K DATE 7-2
CHECKED [signature] DATE 7-1-87
APPROVED [signature] DATE 4-3-87

These materials are and contain confidential and trade secret information of Fernseh Inc. Neither they nor the information they contain shall be copied, reproduced, or disclosed to persons not having a need to know for Fernseh Inc. business purposes or used except for such purposes without prior written permission of Fernseh Inc.
© Copyright 1987 Fernseh Inc. All rights reserved.

ASSY CP-1501ADL/2 FNL
117V, 234V

SIZE D | REV TAB | DWG NO F7-030800-TAB
SCALE 1/1 | SHEET 1 OF 1

REVISIONS				
LETTER	DESCRIPTION	DATE	APPROVED	
—	RELEASED TO PRODUCTION			
A	INC. ECO NO. 8490	30 Sep 83	Roy A. Hemp	J.B.
B	INCORPORATED ECO 10447	10-30-84	Davis	BV
C	INCORPORATED ECO 11090	11-18-85	[illegible]	R.P.
D	INCORPORATED ECO 11345			BV
E	INCORPORATED ECO 11668	2-26-87	Davis	BV

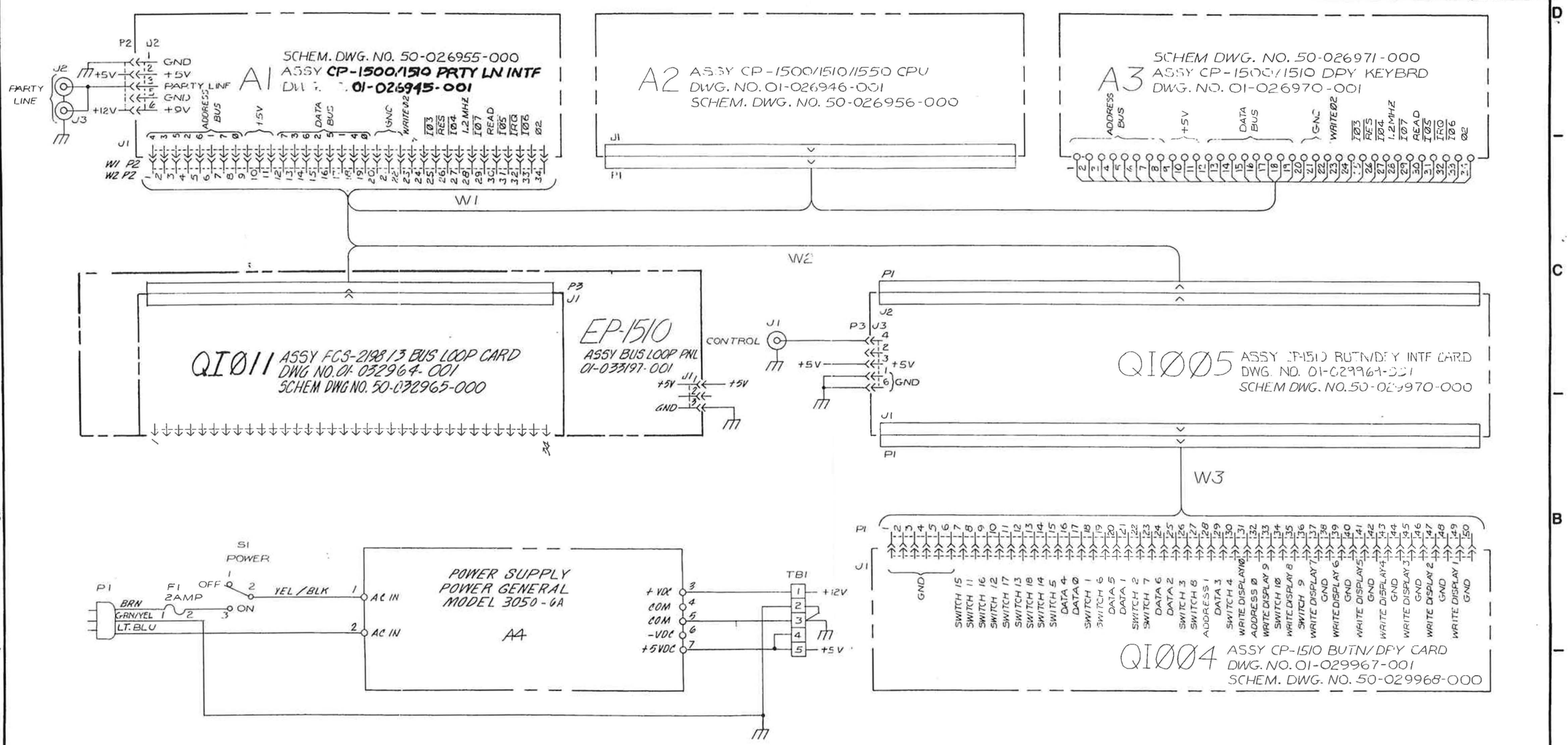

NOTES:
1. TERMINATION TABLE: 11 52-031528-000.

ITEM NO	QTY	DESCRIPTION	PART NO

DO NOT SCALE THIS DRAWING
DIMENSION IN INCHES UNLESS OTHERWISE INDICATED
TOLERANCES UNLESS OTHERWISE INDICATED
DECIMALS: .X ± .XX ± .XXX ± FRACTIONS ± ANGLES ±

NEXT ASSY.	USED ON
—	FCS-2192
—	CP-1510

APPLICATION

DRAWN BY LOPEZ DATE 6.15.
CHECKED Roy A. Hemp DATE 30 Sep 83
APPROVED [illegible] DATE 3-21-84

These materials are and contain confidential and trade secret information of Fernseh Inc. Neither they nor the information they contain shall be copied, reproduced, or disclosed to persons not having a need to know for Fernseh Inc. business purposes or used except for such purposes without prior written permission of Fernseh Inc.
© Copyright 1983 Fernseh Inc. All rights reserved.

BTS
BTS BROADCAST TELEVISION SYSTEMS, INC.
A joint Company of Bosch and Philips

INT DIAG CP-1510

SIZE D REV E DWG. NO. 51-031529-000
SCALE: NONE SHEET 1 OF 1

REVISIONS			
LETTER	DESCRIPTION	DATE	APPROVED
—	RELEASED FOR PRODUCTION		
A	INC. ECO 8981	1-30-84	[illegible]

J.B

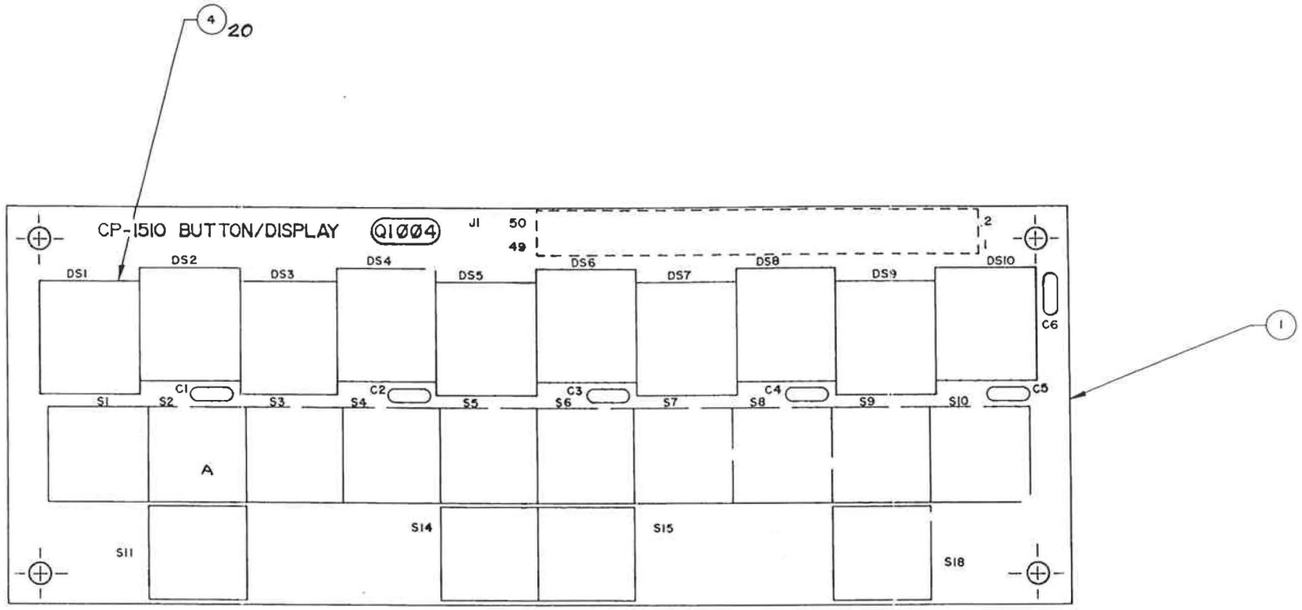

PART SIDE

ASSY NO. 01-029967-001A
SCRN PRNT NO. 03-031804-001A

NOTES:
1. BILL OF MATERIALS: BOM 01-029967-001.
2. ELECTRICAL SCHEMATIC: 50-029968-000.
3. PCB ARTWORK: 54-029943-001.
4. TAG WITH PART NO., WORK ORDER NO + DATE.

—	CP-1510
NEXT ASSY	USED ON
APPLICATION	

DRAWN BY DOCKSTADER DATE 7-20
CHECKED [illegible] DATE 8-[illegible]
APPROVED [illegible] DATE 3-21-84

BTS
BTS BROADCAST TELEVISION SYSTEMS, INC.
A joint Company of Bosch and Philips

ASSY CP-1510 BUTN/DPY CARD (QIØØ4)

SIZE D | REV A | DWG NO 01-029967-001
SCALE 2/1 | SHEET 1 of 1

REVISIONS			
LETTER	DESCRIPTION	DATE	APPROVED
—	RELEASED FOR PRODUCTION		

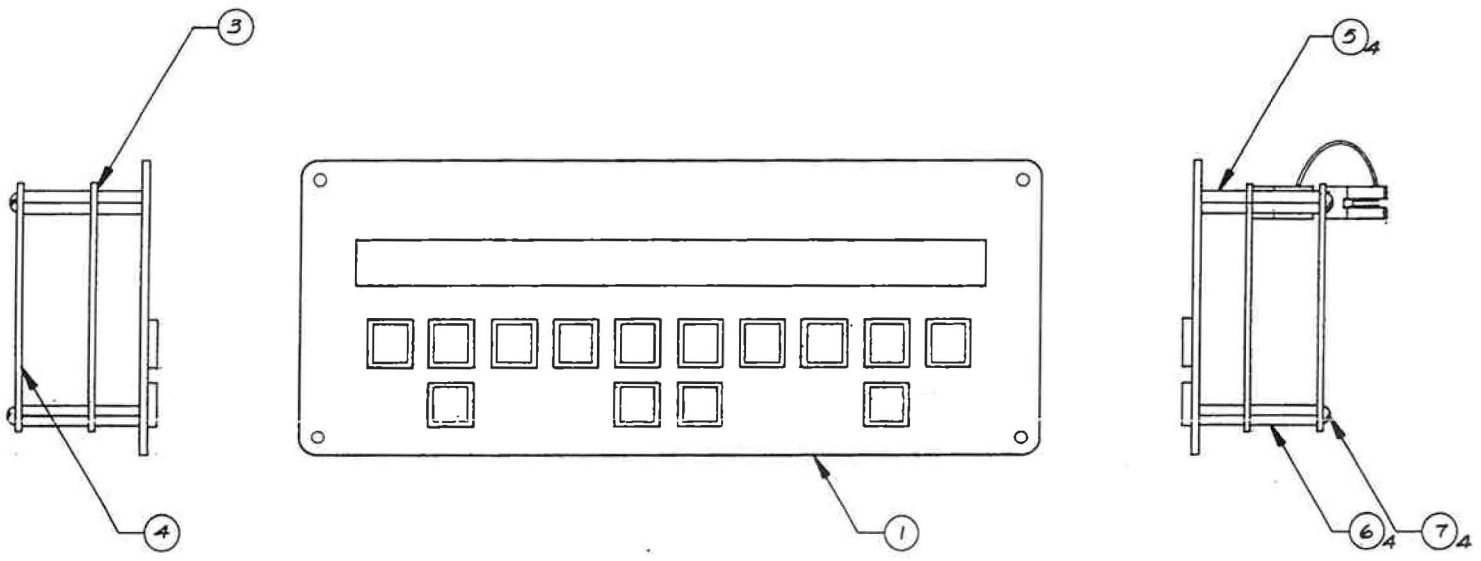

NOTES:
1. BILL OF MATERIALS: BOM 01-031378-001.
2. TERMINATION TABLE: TT 52-031328-000.
3. INTERCONNECTION DIAGRAM: 51-031529-000.
4. TAG WITH PART NO. AND REVISION LETTER.

ITEM NO.	QTY	DESCRIPTION	PART NO

LIST OF MATERIALS

01-031379	CP-1510
01-031379	FCS-2192
NEXT ASSY.	USED ON

APPLICATION

DO NOT SCALE THIS DRAWING
DIMENSIONS IN INCHES UNLESS OTHERWISE INDICATED
TOLERANCES UNLESS OTHERWISE INDICATED
DECIMALS:
X ±
XX = ±
XXX = ±
FRACTIONS = ±
ANGLES = ±

DRAWN BY KIM K. DATE 1-26
CHECKED DATE
APPROVED DATE 6-1-93

These materials are and contain confidential and trade secret information of Fernseh Inc. Neither they nor the information they contain shall be copied, reproduced, or disclosed to persons not having a need to know for Fernseh Inc. business purposes or used except for such purposes without prior written permission of Fernseh Inc.

© Copyright 1993 Fernseh Inc. All rights reserved.

BTS
BTS BROADCAST TELEVISION SYSTEMS, INC.
A Joint Company of Bosch and Philips

ASSY CP-1510
CNTRL PNL

SIZE C | REV. — | DWG. NO. 01-031378-001

SCALE 1/1 | SHEET 1 OF 1

7-23

REVISIONS			
LETTER	DESCRIPTION	DATE	APPROVED
–	RELEASED FOR PRODUCTION		
A	INC. ECO 8981	1-20-84	J.B.

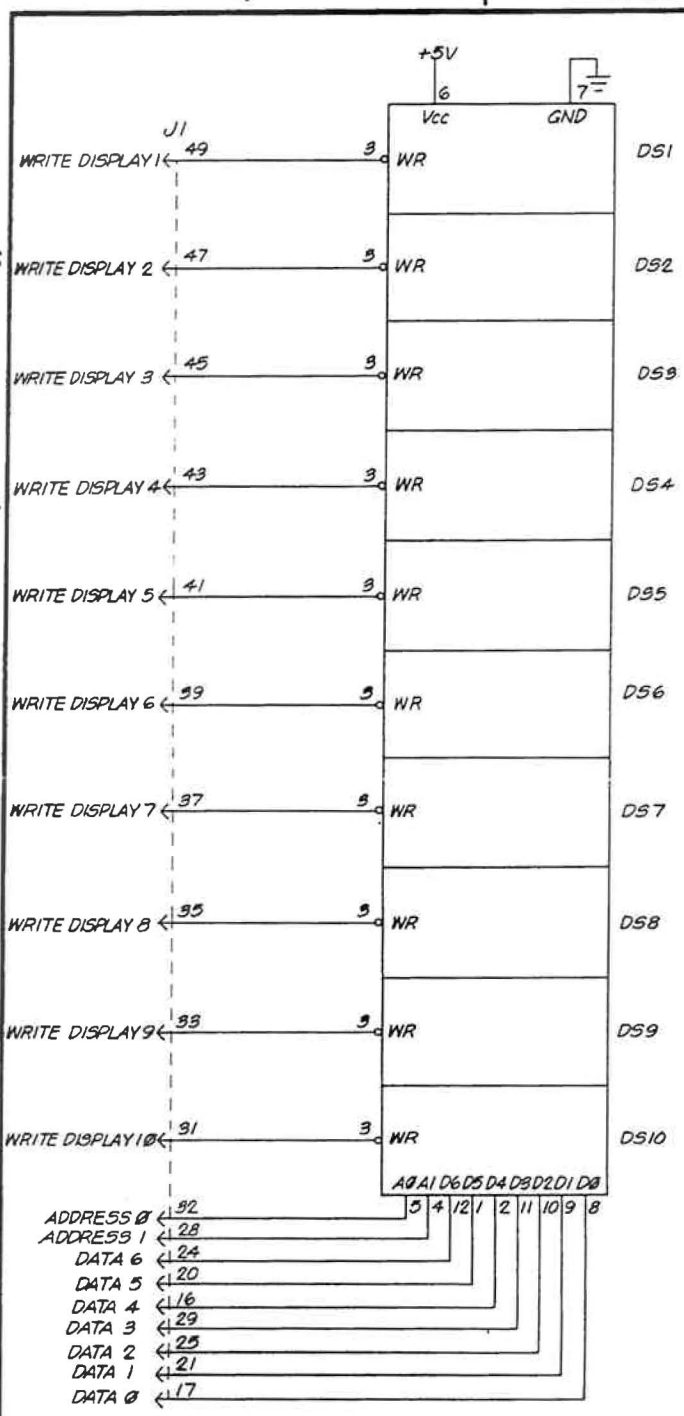

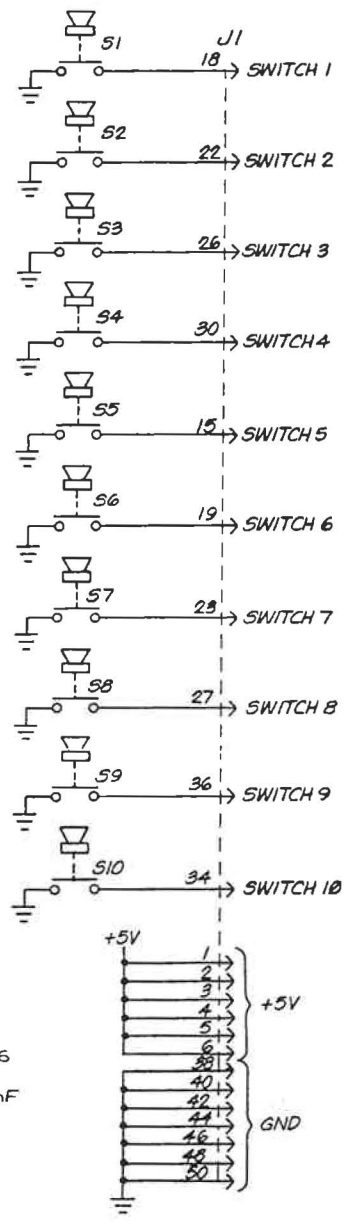

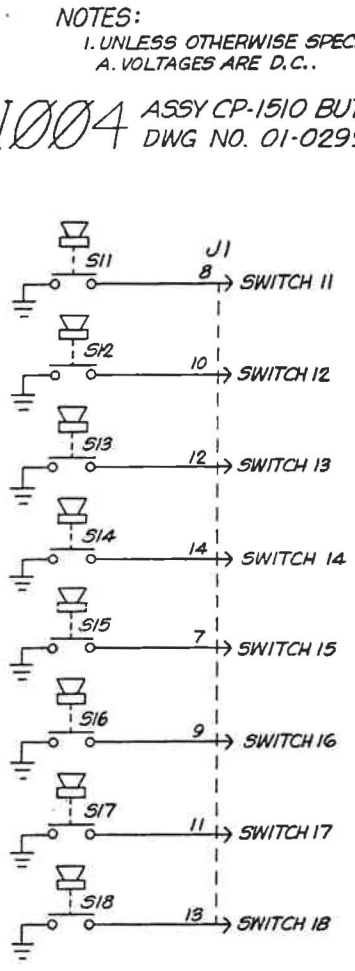

NOTES:
1. UNLESS OTHERWISE SPECIFIED:
   A. VOLTAGES ARE D.C..

Q1004 ASSY CP-1510 BUTN/DPY CARD
DWG NO. 01-029967-001

ITEM NO.	QTY	DESCRIPTION	PART NO

LIST OF MATERIALS

—	FCS-2192
—	CP-1510
NEXT ASSY.	USED ON

APPLICATION

DO NOT SCALE THIS DRAWING
DIMENSIONS IN INCHES UNLESS OTHERWISE INDICATED
TOLERANCES UNLESS OTHERWISE INDICATED
DECIMALS:
X ±
XX = ±
XXX = ±
FRACTIONS = ±
ANGLES = ±

DRAWN BY WESLEY D. DATE 6/16
CHECKED DATE 7-1-
APPROVED DATE 5-21-84

These materials are and contain confidential and trade secret information of Farnsah Inc. Neither they nor the information they contain shall be copied, reproduced, or disclosed to persons not having a need to know for Farnsah Inc. business purposes or used except for such purposes without prior written permission of Farnsah Inc.
© Copyright 1985 Farnsah Inc. All rights reserved.

BTS
BTS BROADCAST TELEVISION SYSTEMS, INC.
A joint Company of Bosch and Philips

SCHEM CP-1510
BUTN/DPY CARD

SIZE C | REV. A | DWG. NO. 50-029968-000
SCALE: NONE | SHEET 1 OF 1

7-25

REVISIONS			
LETTER	DESCRIPTION	DATE	APPROVED
-	RELEASED FOR PROTOTYPE		
A	INC ECO 8981	1-30-84	RB
B	INCORPORATED ECO 10178	7 June 84	Roy A. Hoyt

J.B.

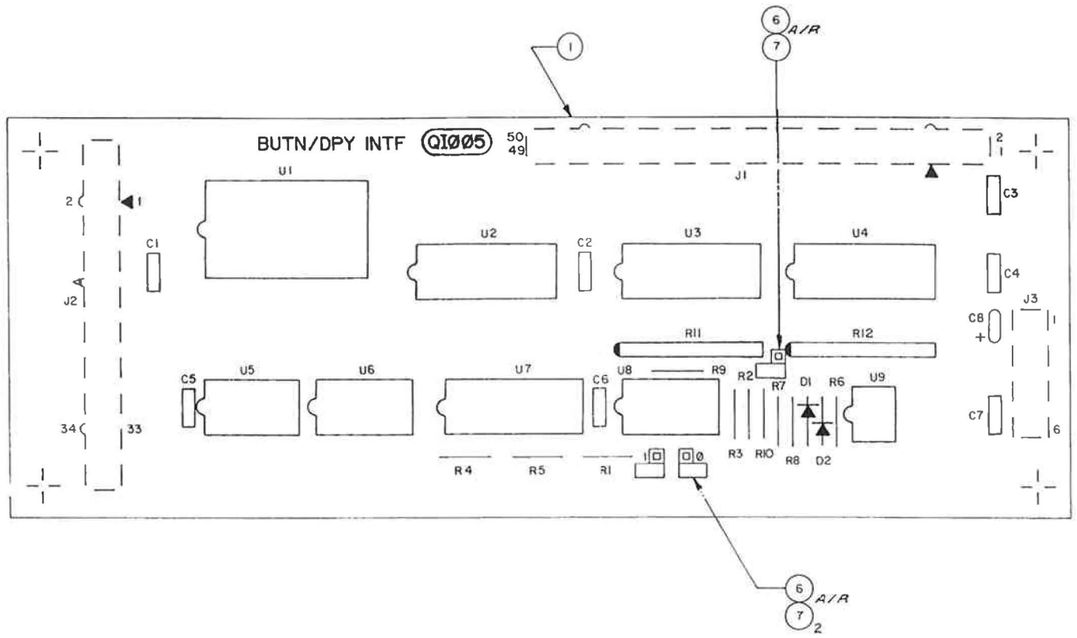

PART SIDE

SCREEN PRINT NO. 03-031803-001A

ASSY. NO. 01-029969-001

NOTES:

1. BILL OF MATERIALS: BOM 01-029969-001.
2. ELECTRICAL SCHEMATIC: 50-029970-000.
3. PCB ARTWORK: 54-029944-001.
4. TAG WITH PART NO., WORK ORDER NO. + DATE.

		DRAWN BY LOPEZ	DATE 7-2-8
		CHECKED	DATE
		APPROVED	DATE 3
	CP-1510		
NEXT ASSY	USED ON		
APPLICATION		83	

BTS

BTS BROADCAST TELEVISION SYSTEMS, INC.

A joint Company of Bosch and Philips

ASSY CP-1510 BUTN/DPY INTF CARD (QI005)

SIZE D REV B DWG NO 01-029969-001

SCALE 2/1 SHEET 1 OF 1

REVISIONS			
LETTER	DESCRIPTION	DATE	APPROVED
–	RELEASED FOR PRODUCTION		
A	INC. ECO 8981	1-21-84	J.B.

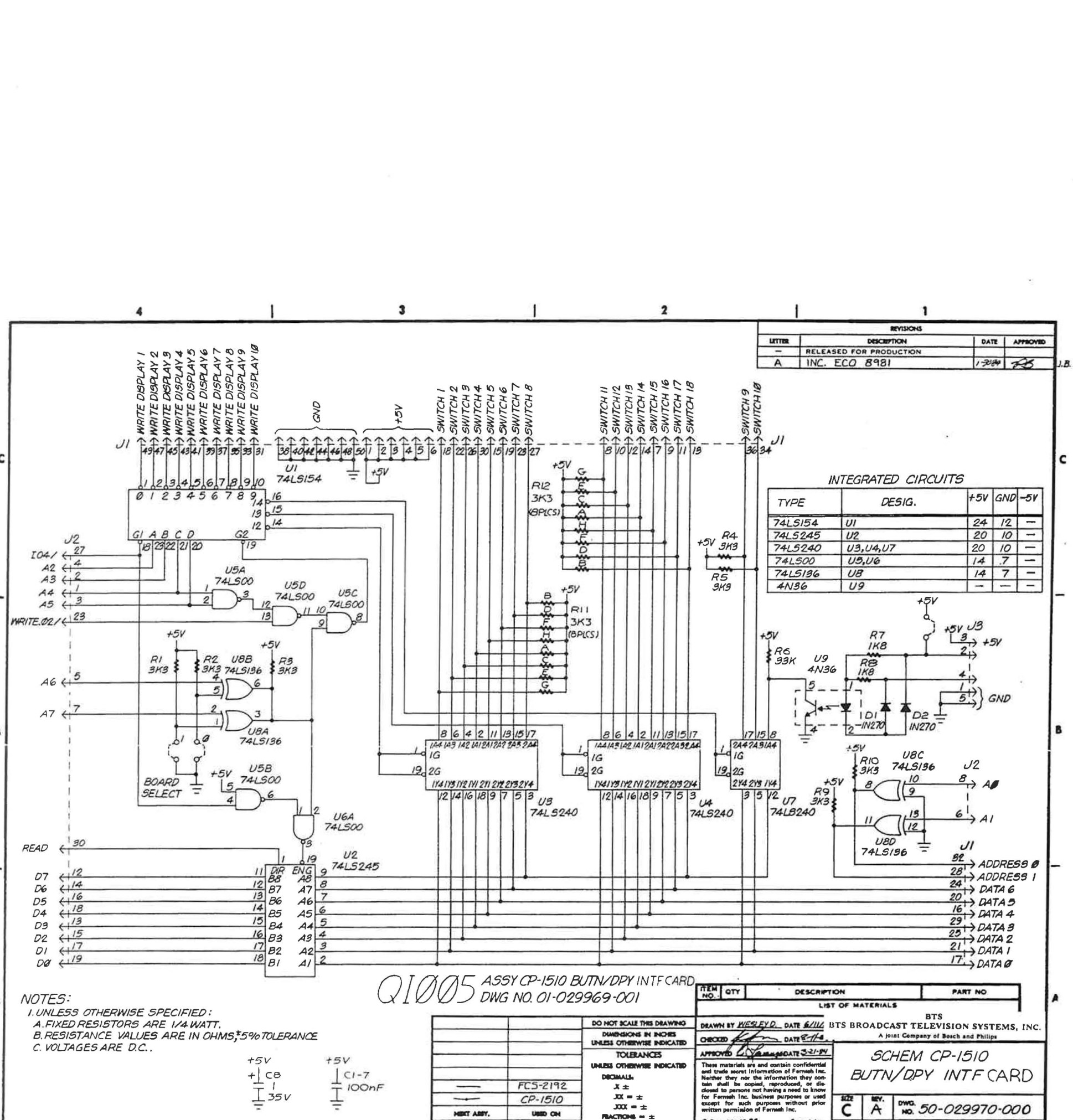

INTEGRATED CIRCUITS

TYPE	DESIG.	+5V	GND	-5V
74LS154	U1	24	12	—
74LS245	U2	20	10	—
74LS240	U3,U4,U7	20	10	—
74LS00	U5,U6	14	7	—
74LS136	U8	14	7	—
4N36	U9	—	—	—

NOTES:
1. UNLESS OTHERWISE SPECIFIED:
   A. FIXED RESISTORS ARE 1/4 WATT.
   B. RESISTANCE VALUES ARE IN OHMS, ±5% TOLERANCE
   C. VOLTAGES ARE D.C..

+5V — C8 1 35V

+5V — C1-7 100nF

Q1005 ASSY CP-1510 BUTN/DPY INTF CARD
DWG NO. 01-029969-001

ITEM NO.	QTY	DESCRIPTION	PART NO
		LIST OF MATERIALS	
		FCS-2192	
		CP-1510	
NEXT ASSY.		USED ON	
APPLICATION			

DO NOT SCALE THIS DRAWING
DIMENSIONS IN INCHES UNLESS OTHERWISE INDICATED
TOLERANCES UNLESS OTHERWISE INDICATED
DECIMALS: X ± XX = ± XXX = ±
FRACTIONS = ±
ANGLES = ±

DRAWN BY WESLEY D. DATE 6/11/
CHECKED DATE 8-1-84
APPROVED DATE 3-21-84

These materials are and contain confidential and trade secret information of Fermata Inc. Neither they nor the information they contain shall be copied, reproduced, or disclosed to persons not having a need to know for Fermata Inc. business purposes or used except for such purposes without prior written permission of Fermata Inc.
© Copyright 1985 Fermata Inc. All rights reserved.

BTS
BTS BROADCAST TELEVISION SYSTEMS, INC.
A Joint Company of Bosch and Philips

SCHEM CP-1510 BUTN/DPY INTF CARD

SIZE C | REV. A | DWG. NO. 50-029970-000
SCALE: NONE | SHEET 1 OF 1

REVISIONS			
LETTER	DESCRIPTION	DATE	APPROVED
—	RELEASED TO PRODUCTION		
A	INC. ECO NO. 8440	26 Sep 83	Roy A. Hemp J.R.
B	INC. ECO NO. 8866	21 Dec 83	Roy A. Hemp
C	INCORPORATED ECO 10212	22 June 84	Roy A. Hemp EV
D	INCORPORATED ECO 10256	[illegible]	[illegible] EV
E	INCORPORATED ECO 10447	[illegible]	[illegible] EV
F	INCORPORATED ECO 11000	[illegible]	[illegible] EV
G	INCORPORATED ECO 11345	10-9-86	J. Davis DRP
H	INCORPORATED ECO 11668	2-26-87	J. Davis EV

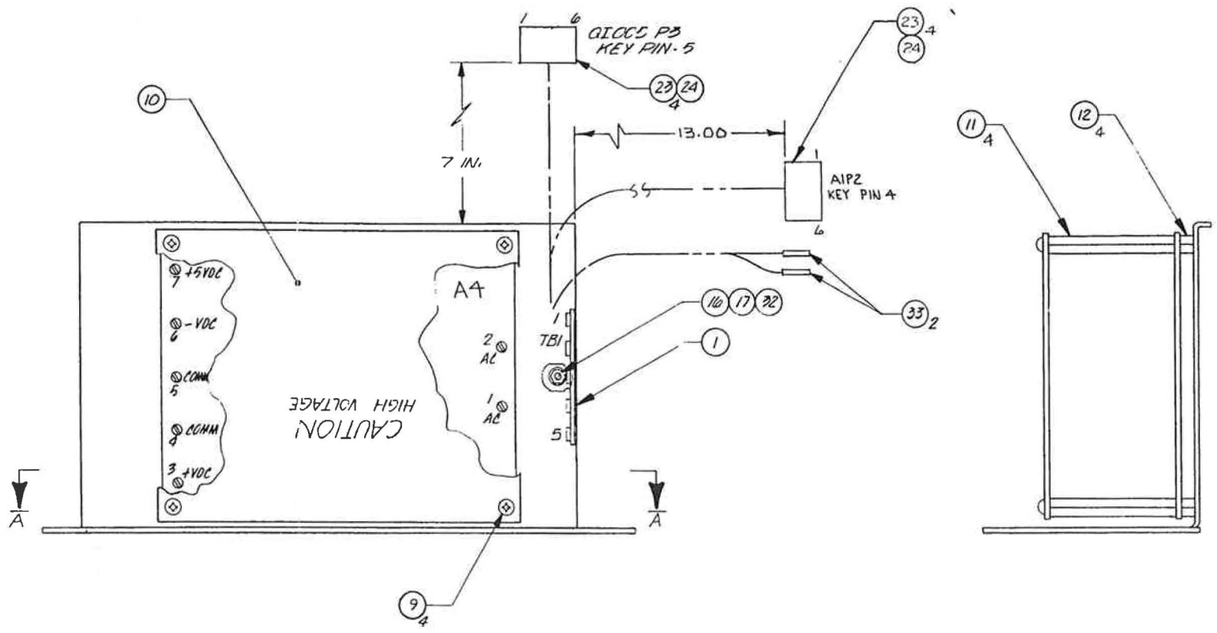

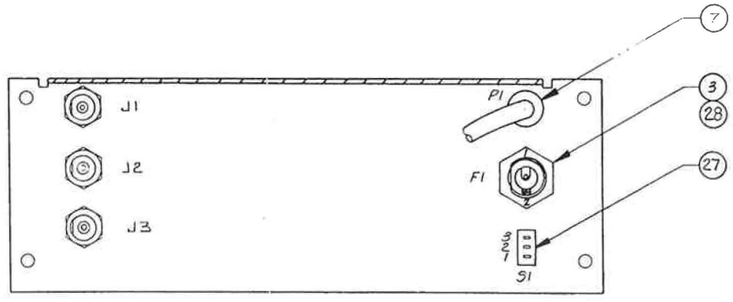

VIEW A-A
(WITH PWR SUPPLY REMOVED)

NOTES.
1. BILL OF MATERIALS: BOM 01-031588-001.
2. TAG WITH PART NUMBER, WORK ORDER NO. & DATE.
3. TERMINATION TABLE: 52-031528-000.
4. INTERCONNECTION DIAGRAM: 51-031529-000.

ITEM NO	QTY	DESCRIPTION	PART NO

BTS
BTS BROADCAST TELEVISION SYSTEMS, INC.
A joint Company of Beech and Philips

DRAWN BY KIM K DATE 5/6
CHECKED [illegible] DATE 16 May 83
APPROVED [illegible] DATE 6-1-83

These materials are and contain confidential and trade secret information of Fernseh Inc. Neither they nor the information they contain shall be copied, reproduced, or disclosed to persons not having a need to know for Fernseh Inc. business purposes or used except for such purposes without prior written permission of Fernseh Inc.

© Copyright 1983 Fernseh Inc. All rights reserved.

DO NOT SCALE THIS DRAWING
DIMENSION IN INCHES UNLESS OTHERWISE INDICATED
TOLERANCES UNLESS OTHERWISE INDICATED
DECIMALS:
.X = ±
.XX = ±.20
.XXX = ±
FRACTIONS = ±
ANGLES = ±

NEXT ASSY	USED ON
01-031379	CP-1510
01-031379	FCS-2192

APPLICATION

ASSY CP-1510
PWR SUPPLY RPNL

SIZE D | REV H | DWG NO 01-031588-001
SCALE: 1/1 | SHEET 1 OF 1

REVISIONS			
LETTER	DESCRIPTION	DATE	APPROVED
–	RELEASED FOR PRODUCTION		
A	INC. ECO NO. 8542	9/13/83	P.B.
B	INCORPORATED ECO 10447	11-21-84	Davis

NOTES:
1. BILL OF MATERIALS: BOM 01-031530-001.
2. LABEL WITH PART NO. AND REVISION LETTER.
3. CONNECTION BETWEEN P1 AND P2 ARE PIN TO PIN.

ITEM NO.	QTY	DESCRIPTION	PART NO
		LIST OF MATERIALS	

01-031379	CP-1510
01-031379	FCS-2192
NEXT ASSY.	USED ON
APPLICATION	

DO NOT SCALE THIS DRAWING
DIMENSIONS IN INCHES UNLESS OTHERWISE INDICATED
TOLERANCES UNLESS OTHERWISE INDICATED
DECIMALS:
X ±
XX = ±
XXX = ±
FRACTIONS = ±
ANGLES = ±

DRAWN BY KIM K DATE 4-25
CHECKED A.Z. Corning DATE 5/1/84
APPROVED S. Swaney DATE 6-1-83

BTS
BTS BROADCAST TELEVISION SYSTEMS, INC.
A joint Company of Bosch and Philips

These materials are and contain confidential and trade secret information of Farnsah Inc. Neither they nor the information they contain shall be copied, reproduced, or disclosed to persons not having a need to know for Farnsah Inc. business purposes or used except for such purposes without prior written permission of Farnsah Inc.
© Copyright 1983 Farnsah Inc. All rights reserved.

ASSY
CP-1510 CABLE

SIZE	REV.	DWG. NO.
C	B	01-031530-001

SCALE: NONE SHEET 1 OF 1

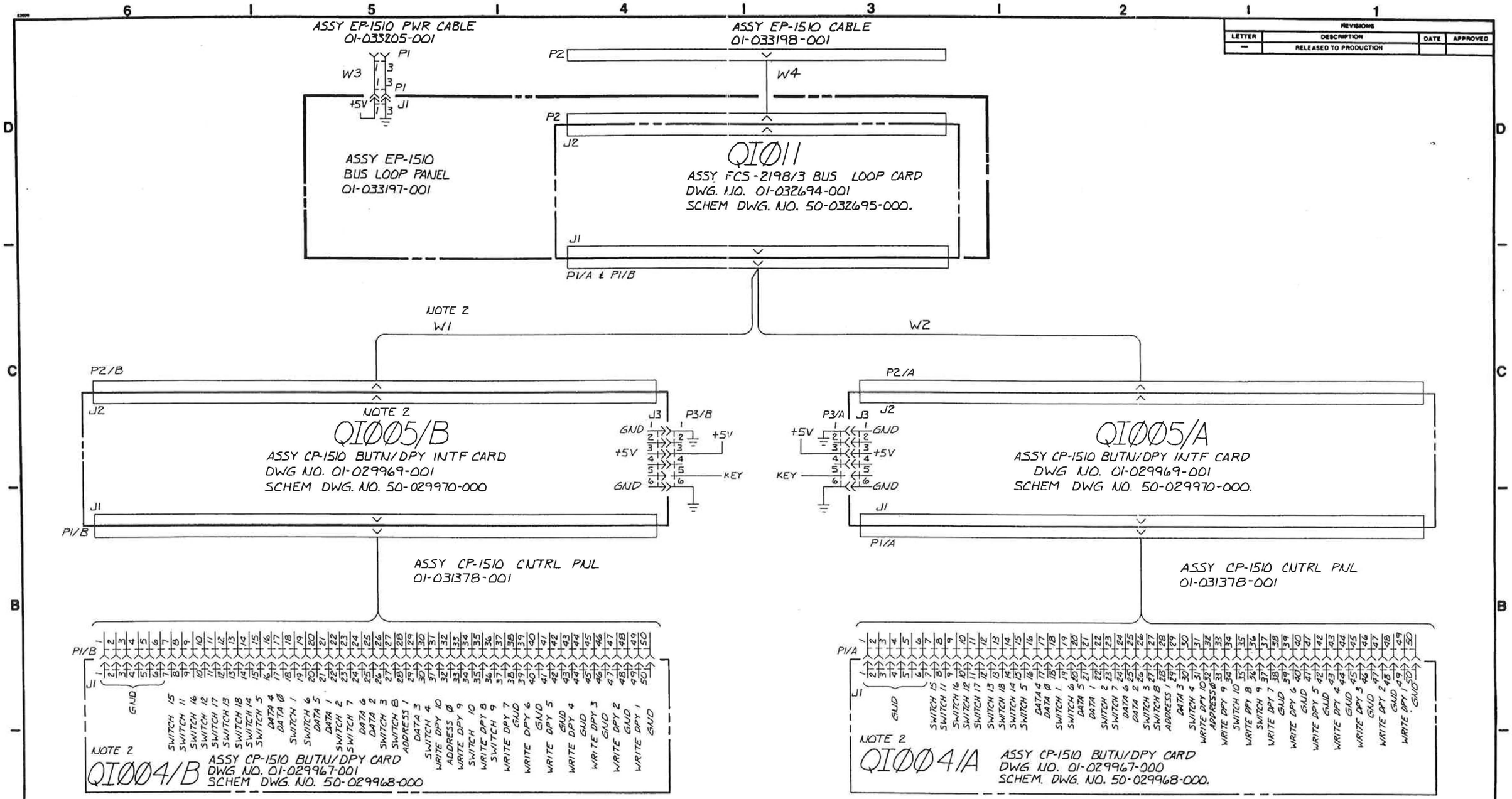

NOTES:

1. TERMINATION TABLE: TT52-033202-000.
2. DWG. REFLECTS /2 VERSION INSTALLED. QIØØ5/B AND QIØØ4/B AND W1 CABLE ARE NOT INSTALLED IN /1 VERSION.

REVISIONS			
LETTER	DESCRIPTION	DATE	APPROVED
—	RELEASED TO PRODUCTION		

ITEM NO	QTY	DESCRIPTION	PART NO

LIST OF MATERIALS

DO NOT SCALE THIS DRAWING
DIMENSION IN INCHES UNLESS OTHERWISE INDICATED
TOLERANCES UNLESS OTHERWISE INDICATED
DECIMALS: .X = ± .XX = ± .XXX = ± FRACTIONS = ± ANGLES = ±

NEXT ASSY.	USED ON
	EP-1510

APPLICATION

DRAWN BY HEITZMAN DATE 9-13
CHECKED Ron A. Heap DATE 1984
APPROVED [illegible] DATE 9-19-84

These materials are and contain confidential and trade secret information of Robert Bosch Corporation. Neither they nor the information they contain shall be copied, reproduced, or disclosed to persons not having a need to know for Robert Bosch Corporation business purposes without prior written permission of Robert Bosch Corporation.
© Copyright 1984
All rights reserved

BOSCH

BTS
BTS BROADCAST TELEVISION SYSTEMS, INC.
A joint Company of Bosch and Philips

INT DIAG EP-1510/1/2

SIZE D | REV. — | DWG. NO. 51-033201-000
SCALE: NONE | SHEET 1 OF 1

REVISIONS			
LETTER	DESCRIPTION	DATE	APPROVED
—	RELEASED TO PRODUCTION		

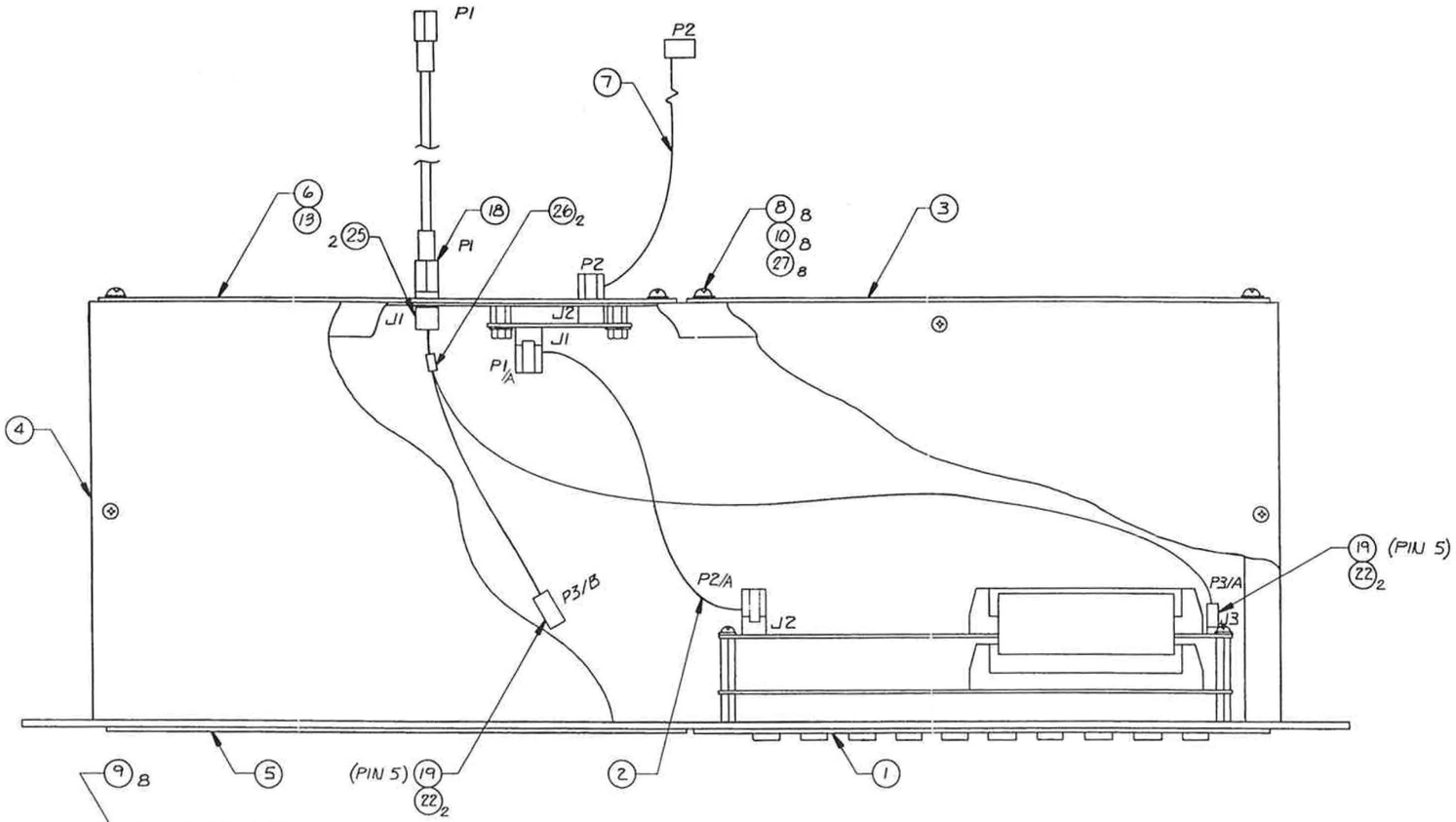

NOTES:
1. BILL OF MATERIALS: BOM 01-033199-001.
2. TERMINATION TABLE: 52-033202-000.
3. INTERCONNECTION DIAGRAM: 51-033201-000.
4. TAG WITH PART NO., WORK ORDER NO. AND DATE.

ITEM NO	QTY	DESCRIPTION	PART NO

LIST OF MATERIALS

NEXT ASSY.	USED ON
—	EP-1510

APPLICATION

DO NOT SCALE THIS DRAWING
DIMENSION IN INCHES UNLESS OTHERWISE INDICATED
TOLERANCES UNLESS OTHERWISE INDICATED
DECIMALS:
.X = ±
.XX = ±
.XXX = ±
FRACTIONS = ±
ANGLES = ±

DRAWN BY HEITZMAN DATE 9-12
CHECKED [illegible] DATE 12-8
APPROVED [illegible] DATE 12-19-84

These materials are and contain confidential and trade secret information of Robert Bosch Corporation. Neither they nor the information they contain shall be copied, reproduced, or disclosed to persons not having a need to know for Robert Bosch Corporation business purposes without prior written permission of Robert Bosch Corporation.
© Copyright 1984
All rights reserved

BOSCH

BTS
BTS BROADCAST TELEVISION SYSTEMS, INC.
A joint Company of Bosch and Philips

ASSY EP-1510/1 FNL

SIZE D | REV. — | DWG. NO. 01-033199-001
SCALE: 1/1 | SHEET 1 OF 1

REVISIONS			
LETTER	DESCRIPTION	DATE	APPROVED
—	RELEASED TO PRODUCTION		

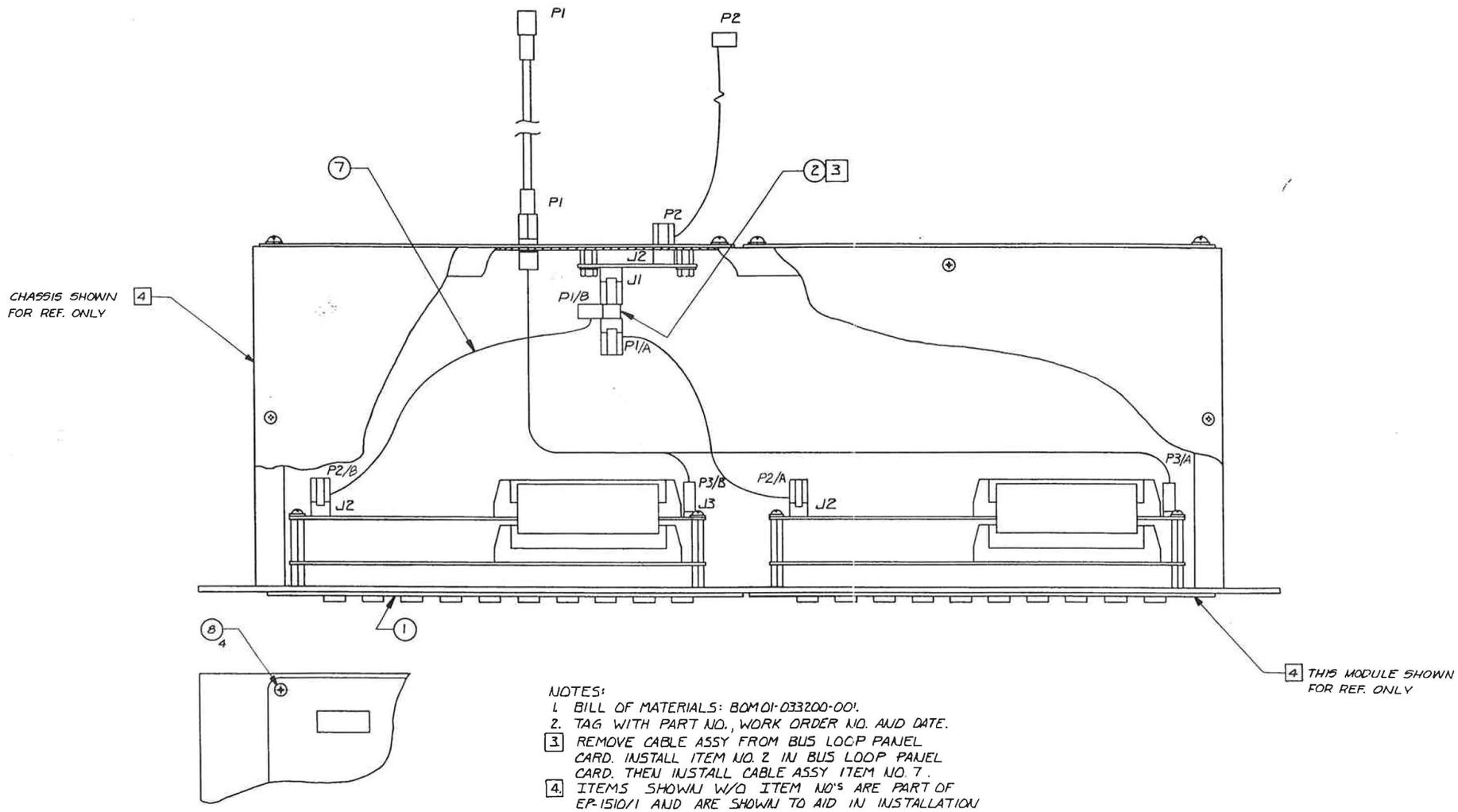

NOTES:
1. BILL OF MATERIALS: BOM01-033200-001.
2. TAG WITH PART NO., WORK ORDER NO. AND DATE.
3. REMOVE CABLE ASSY FROM BUS LOOP PANEL CARD. INSTALL ITEM NO. 2 IN BUS LOOP PANEL CARD. THEN INSTALL CABLE ASSY ITEM NO. 7.
4. ITEMS SHOWN W/O ITEM NO'S ARE PART OF EP-1510/1 AND ARE SHOWN TO AID IN INSTALLATION OF EP-1510/2 EXPANSION.

ITEM NO.	QTY	DESCRIPTION	PART NO
		LIST OF MATERIALS	

NEXT ASSY.	USED ON
—	EP-1510/2
APPLICATION	

DO NOT SCALE THIS DRAWING
DIMENSION IN INCHES UNLESS OTHERWISE INDICATED
TOLERANCES UNLESS OTHERWISE INDICATED
DECIMALS:
.X ± .
.XX ± .
.XXX ± .
FRACTIONS ± .
ANGLES ± .

DRAWN BY HEITZMAN DATE 9-17-
CHECKED [signature] DATE 10-5
APPROVED [signature] DATE 7-19-84

These materials are and contain confidential and trade secret information of Robert Bosch Corporation. Neither they nor the information they contain shall be copied, reproduced, or disclosed to persons not having a need to know for Robert Bosch Corporation business purposes without prior written permission of Robert Bosch Corporation.
© Copyright 1984 All rights reserved.

BTS
BTS BROADCAST TELEVISION SYSTEMS, INC.
A joint Company of Bosch and Philips

ASSY EP-1510/2 FNL

SIZE D | REV. — | DWG. NO. 01-033200-001
SCALE: 1/1 | SHEET 1 OF 1

REVISIONS			
LETTER	DESCRIPTION	DATE	APPROVED
—	RELEASED FOR PRODUCTION		

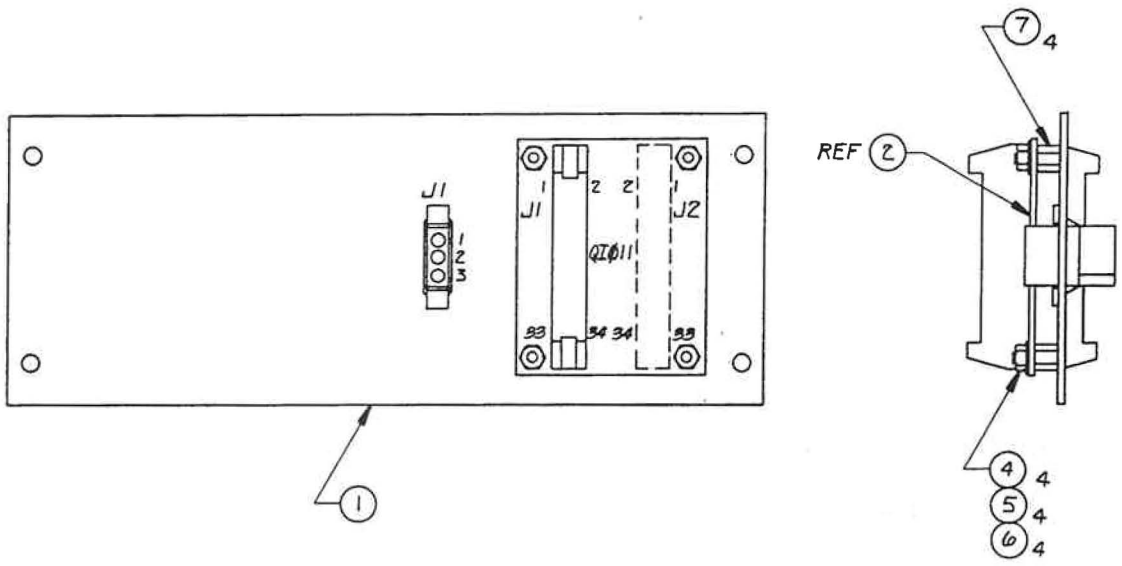

NOTES:
1. BILL OF MATERIALS: BOM 01-033197-001.
2. TAG WITH PART NUMBER. WORK ORDER NUMBER AND DATE.
3. INTERCONNECTION DIAGRAM:
   EP-1510/1/2 51-033201-000
   CP-1510 51-031529-000

ITEM NO.	QTY	DESCRIPTION	PART NO
LIST OF MATERIALS			

01-030877	CP-1510
01-033199	EP-1510
NEXT ASSY.	USED ON
APPLICATION	

DO NOT SCALE THIS DRAWING
DIMENSIONS IN INCHES UNLESS OTHERWISE INDICATED
TOLERANCES UNLESS OTHERWISE INDICATED
DECIMALS:
X ±
.XX = ±
.XXX = ±
FRACTIONS = ±
ANGLES = ±

DRAWN BY HEITZMAN DATE 9-10-8
CHECKED Roy A. Hoop DATE 18 Sep
APPROVED C. Fl... DATE 7-17-84

These materials are and contain confidential and trade secret information of Fernseh Inc. Neither they nor the information they contain shall be copied, reproduced, or disclosed to persons not having a need to know for Fernseh Inc. business purposes or used except for such purposes without prior written permission of Fernseh Inc.
© Copyright 1984 Fernseh Inc. All rights reserved.

BTS
BTS BROADCAST TELEVISION SYSTEMS, INC.
A Joint Company of Bosch and Philips

ASSY EP-1510 BUS LOOP PANEL

SIZE	REV.	DWG. NO.
C	—	01-033197-001

SCALE: 1/1 SHEET 1 OF 1

REVISIONS			
LETTER	DESCRIPTION	DATE	APPROVED
—	RELEASED FOR PRODUCTION		

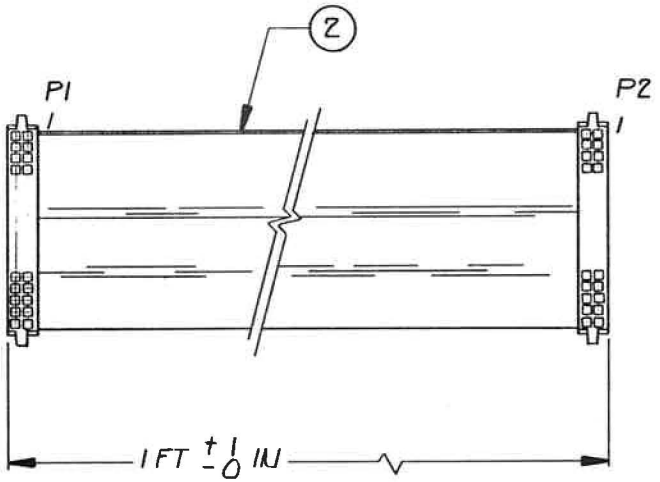

NOTES:

1. BILL OF MATERIALS: BOM 01-033198-001.
2. LABEL WITH PART NUMBER AND REVISION LETTER.
3. CONNECTION BETWEEN P2 AND P1 ARE PIN TO PIN.

ITEM NO.	QTY	DESCRIPTION	PART NO

LIST OF MATERIALS

01-033199	EP-1510/1
NEXT ASSY.	USED ON
APPLICATION	

DO NOT SCALE THIS DRAWING

DIMENSIONS IN INCHES UNLESS OTHERWISE INDICATED

TOLERANCES UNLESS OTHERWISE INDICATED
DECIMALS:
.X = ±
.XX = ±
.XXX = ±
FRACTIONS = ±
ANGLES = ±

DRAWN BY HEITZMAN DATE 9-7-
CHECKED Roy A. Heap DATE 18 Sep
APPROVED [illegible] DATE 9-19-84

These materials are and contain confidential and trade secret information of Fernseh Inc. Neither they nor the information they contain shall be copied, reproduced, or disclosed to persons not having a need to know for Fernseh Inc. business purposes or used except for such purposes without prior written permission of Fernseh Inc.
© Copyright 1984 Fernseh Inc. All rights reserved.

BTS
BTS BROADCAST TELEVISION SYSTEMS, INC.
A joint Company of Bosch and Philips

ASSY EP-1510 CABLE

SIZE B | REV. — | DWG. NO. 01-033198-001

SCALE NONE | SHEET 1 OF 1

REVISIONS			
LETTER	DESCRIPTION	DATE	APPROVED
—	RELEASED FOR PRODUCTION		

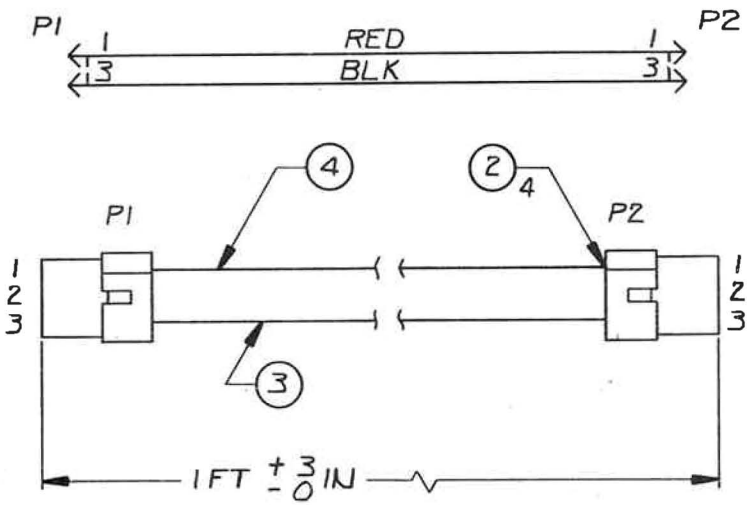

NOTES:
1. BILL OF MATERIALS: BOM 01-033205-001.
2. LABEL WITH PART NUMBER AND REVISION LETTER.
3. CONNECTIONS BETWEEN P1 AND P2 ARE PIN TO PIN.

ITEM NO.	QTY	DESCRIPTION	PART NO
		LIST OF MATERIALS	

01-033199	EP-1510/1
NEXT ASSY.	USED ON
APPLICATION	

DO NOT SCALE THIS DRAWING
DIMENSIONS IN INCHES UNLESS OTHERWISE INDICATED
TOLERANCES UNLESS OTHERWISE INDICATED
DECIMALS: .X = ± .XX = ± .XXX = ±
FRACTIONS = ±
ANGLES = ±

DRAWN BY HEITZ MAT DATE 9-7
CHECKED Roy A. Heap DATE 9-8
APPROVED [illegible] DATE 9-19-84

These materials are and contain confidential and trade secret information of Fernseh Inc. Neither they nor the information they contain shall be copied, reproduced, or disclosed to persons not having a need to know for Fernseh Inc. business purposes or used except for such purposes without prior written permission of Fernseh Inc.
© Copyright 1984 Fernseh Inc. All rights reserved.

BTS
BTS BROADCAST TELEVISION SYSTEMS, INC.
A joint Company of Bosch and Philips

ASSY EP-1510
PWR CABLE

SIZE	REV.	DWG. NO.
B	—	01-033205-001

SCALE NONE SHEET 1 OF 1

REVISIONS			
LETTER	DESCRIPTION	DATE	APPROVED
—	RELEASED FOR PRODUCTION		

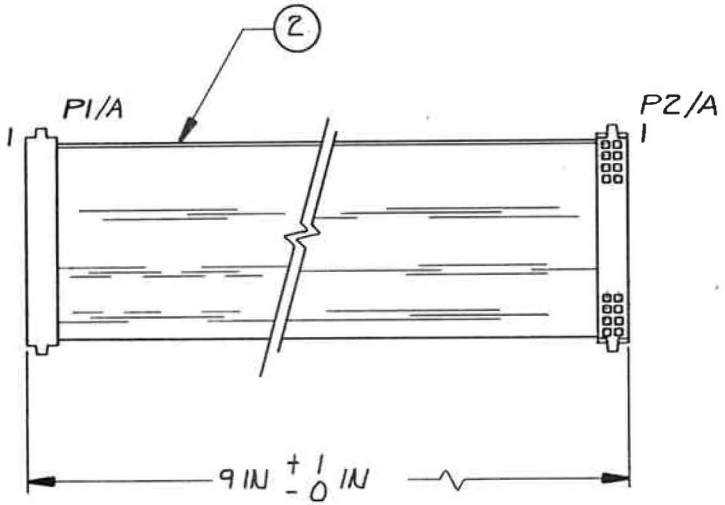

NOTES:
1. BILL OF MATERIAL: BOM 01-033226-001.
2. LABEL WITH PART NO. AND REVISION LETTER.
3. CONNECTIONS BETWEEN P1 AND P2 ARE PIN TO PIN.

ITEM NO.	QTY	DESCRIPTION	PART NO
		LIST OF MATERI	

01-033199	EP-1510/1
NEXT ASSY.	USED ON
APPLICATION	

DO NOT SCALE THIS DRAWING
DIMENSIONS IN INCHES UNLESS OTHERWISE INDICATED
TOLERANCES UNLESS OTHERWISE INDICATED
DECIMALS: .X = ± .XX = ± .XXX = ±
FRACTIONS = ±
ANGLES = ±

DRAWN BY HEITZMAN DATE 9-12
CHECKED Roy A. Hoop DATE 9-19-84
APPROVED [illegible] DATE 9-19-84

These materials are and contain confidential and trade secret information of Farnsh Inc. Neither they nor the information they contain shall be copied, reproduced, or disclosed to persons not having a need to know for Farnsh Inc. business purposes or used except for such purposes without prior written permission of Farnsh Inc.
© Copyright 1984 Farnsh Inc.
All rights reserved.

BTS
BTS BROADCAST TELEVISION SYSTEMS, INC.
A Joint Company of Bosch and Philips

ASSY EP-1510/1
CABLE

SIZE	REV.	DWG. NO.
B	—	01-033226-001

SCALE NONE SHEET 1 OF 1

REVISIONS			
LETTER	DESCRIPTION	DATE	APPROVED
—	RELEASED FOR PRODUCTION		

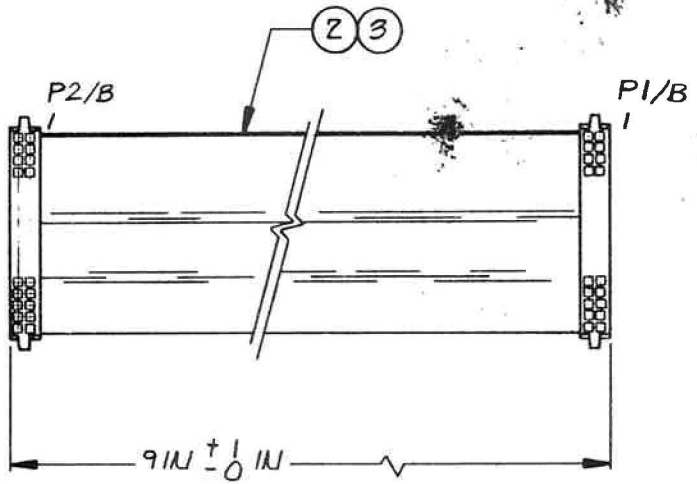

NOTES:
1. BILL OF MATERIALS: BOM 01-033227-001.
2. LABEL WITH PART NUMBER AND REVISION LETTER.
3. CONNECTION BETWEEN P2 AND P1 ARE PIN TO PIN.

ITEM NO.	QTY	DESCRIPTION	PART NO

LIST OF MATERIALS

01-033200	EP-1510/2
NEXT ASSY.	USED ON
APPLICATION	

DO NOT SCALE THIS DRAWING
DIMENSIONS IN INCHES UNLESS OTHERWISE INDICATED
TOLERANCES UNLESS OTHERWISE INDICATED
DECIMALS: .X = ± .XX = ± .XXX = ±
FRACTIONS = ±
ANGLES = ±

DRAWN BY HEITZMAN DATE 9-7-
CHECKED Roy A. Heap DATE 10.5
APPROVED [signature] DATE 9-14-87

These materials are and contain confidential and trade secret information of Fernseh Inc. Neither they nor the information they contain shall be copied, reproduced, or disclosed to persons not having a need to know for Fernseh Inc. business purposes or used except for such purposes without prior written permission of Fernseh Inc.
© Copyright 1984 Fernseh Inc.
All rights reserved

BTS
BTS BROADCAST TELEVISION SYSTEMS, INC.
A joint Company of Bosch and Philips

ASSY EP-1510/2
CABLE

SIZE B | REV. — | DWG. NO. 01-033227-001
SCALE NONE | SHEET 1 OF 1

REVISIONS			
LETTER	DESCRIPTION	DATE	APPROVED
–	RELEASED FOR PRODUCTION		

SEE TABULATION TABLE

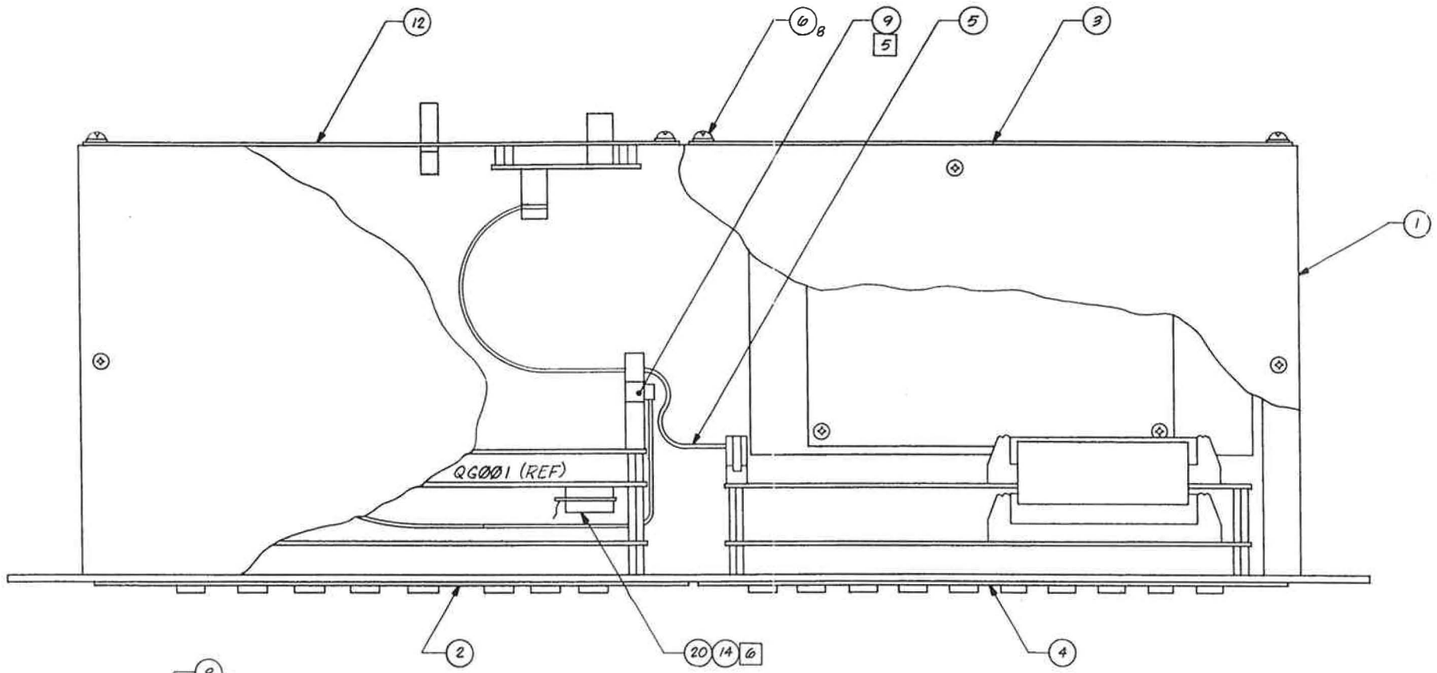

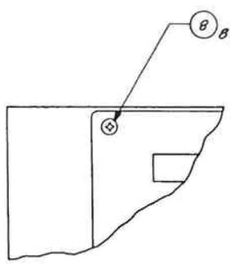

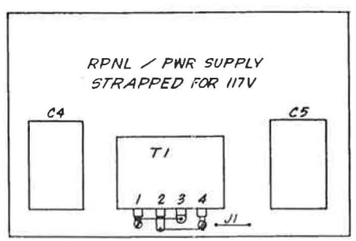

PWR SUPPLY COMES STRAPPED FOR 117VAC AS SHOWN.
FOR 220VAC THE FOLLOWING STEPS MUST BE INCORPORATED.

1. REMOVE JUMP BETWEEN T1-1 & T1-3.
2. REMOVE JUMP BETWEEN T1-2 & T1-4.
3. REMOVE J1 JUMPER.
4. ADD JUMP BETWEEN T1-2 & T1-3.

NOTES:

1. BILL OF MATERIALS : BOM F7-030800-TAB.
2. TERMINATION TABLE: 52-031528-000.
3. INTERCONNECTION DIAGRAM: 51-031529-000.
4. TAG WITH PART NO. WORK ORDER NO. AND DATE.
5. REMOVE CABLE ASSY FROM PRTY LN INTF CARD. INSTALL ITEM NO. 9 IN PRTY LN INTF CARD. THEN INSTALL CABLE ASSY ITEM NO. 5.
6. CUT PIN OFF WIRE ON MOD CARD QX008 (ITEM 20) INSTALLED IN QG001-U6. STRIP, TIN & SOLDER WIRE TO QG001-U11-3.

DASH NO.	VOLT.	FUSE	REV	ECO NO.	INC BY	APPR.	DATE	NEXT ASSY.	USED ON
-008	220V	1/8 AMP	–						CP-1511ADL
-004	117V	1/4 AMP	A	11691					CP-1511ADL

TABULATION TABLE

APPLICATION

DO NOT SCALE THIS DRAWING
DIMENSIONS IN INCHES UNLESS OTHERWISE INDICATED
TOLERANCES UNLESS OTHERWISE INDICATED
DECIMALS: .x ±, .xx ± , .xxx ± ; FRACTIONS ± ; ANGLES ± ;

DRAWN BY Ron K. DATE 7-27-87
CHECKED J. Davis DATE 9-1-87
APPROVED C. Kyle DATE 9-3-87

These materials are and contain confidential and trade secret information of Robert Bosch Corporation. Neither they nor the information they contain shall be copied, reproduced, or disclosed to persons not having a need to know for Robert Bosch Corporation business purposes without prior written permission of Robert Bosch Corporation.
* Copyright 19 87 All rights reserved.

BOSCH

BTS
BTS BROADCAST TELEVISION SYSTEMS, INC.
A joint Company of Bosch and Philips

ASSY CP-1511ADL FNL
117V / 220V

SIZE D | REV. TAB | DWG. NO. F7-030800-TAB

SCALE: 1/1 SHEET 1 OF 1