Bill Sacks, the founder and product designer of Straight Wire Audio, still services SWA equipment on a case by case basis. Please email BillSacks@Gmail.com for more info.

SWA PHONO PREAMP SETUP INSTRUCTIONS

GROUNDING. First make sure that a proper audio ground is established and securely connected to the binding post on the rear of the phono preamp unit. Check the grounding of the phono cartridge itself. Most professional tone arms have a metal head shell. Most phono cartridges are supplied with a strap around one of the low leads, which is slipped under the metal case of the phono cartridge. This facilitates shielding of the phono cartridge in a consumer environment with a plastic head shell. This strap must be removed when a metal tone arm is used in order to avoid a ground loop.

NOTE

Note, there is no DC connection between the ground binding post and the chassis of the unit. There is a .27 uF film capacitor connecting the binding post to the chassis. The RCA input jacks are fully isolated from the chassis also.

SETUP. The resistive loading control is initially set at full counter clockwise. The loading capacitor is then tuned for a peak at the highest frequency on a test record. The resistive loading control is then adjusted so that a moderately high frequency tone (10 to 12 kHz) matches the reference tone (400 Hz or 1 kHz). The true response of the phono cartridge can then be plotted. Most phono cartridges used in broadcast service can be expected to be flat within 1 dB from 50 Hz to approximately 10 kHz. Response to 15 kHz usually falls within 2 dB. The use of a precisely fixed RIAA deemphasis and proper cartridge loading as outlined above results in the best possible transient response and channel to channel phase tracking. This precise phase tracking produces superior stereo imaging and a better sounding mono sum. The RIAA response can be confirmed with a low source impedance audio generator and a volt meter or oscilloscope.

OUTPUTS. The outputs of this phono preamp unit appear on the XLR connectors on the rear. They are balanced differential outputs. If an unbalanced load is to fed from the preamp, only one side of the balanced output need be connected to the load. No advantage is gained by grounding the other side of the balanced output. The other side can be used however, as an isolated monitor of the output of the preamp. This output can comfortably drive headphones, but the absolute polarity will be reversed from the other output.

Please feel free to call us with any comments or questions regarding SWA equipment at 800-368-2081 or if you are calling from Virginia 703-522-7780.

NOTE

SOURCE IMP = 600 OHMS
LOAD IMP = BALANCED BRIDGING
OUTPUT LEVEL = 0 dbm 1 FOR BEST HEADROOM (26db)
+4dbm MAXIMUM

PIN #2 OF OUTPUT IS INPHASE

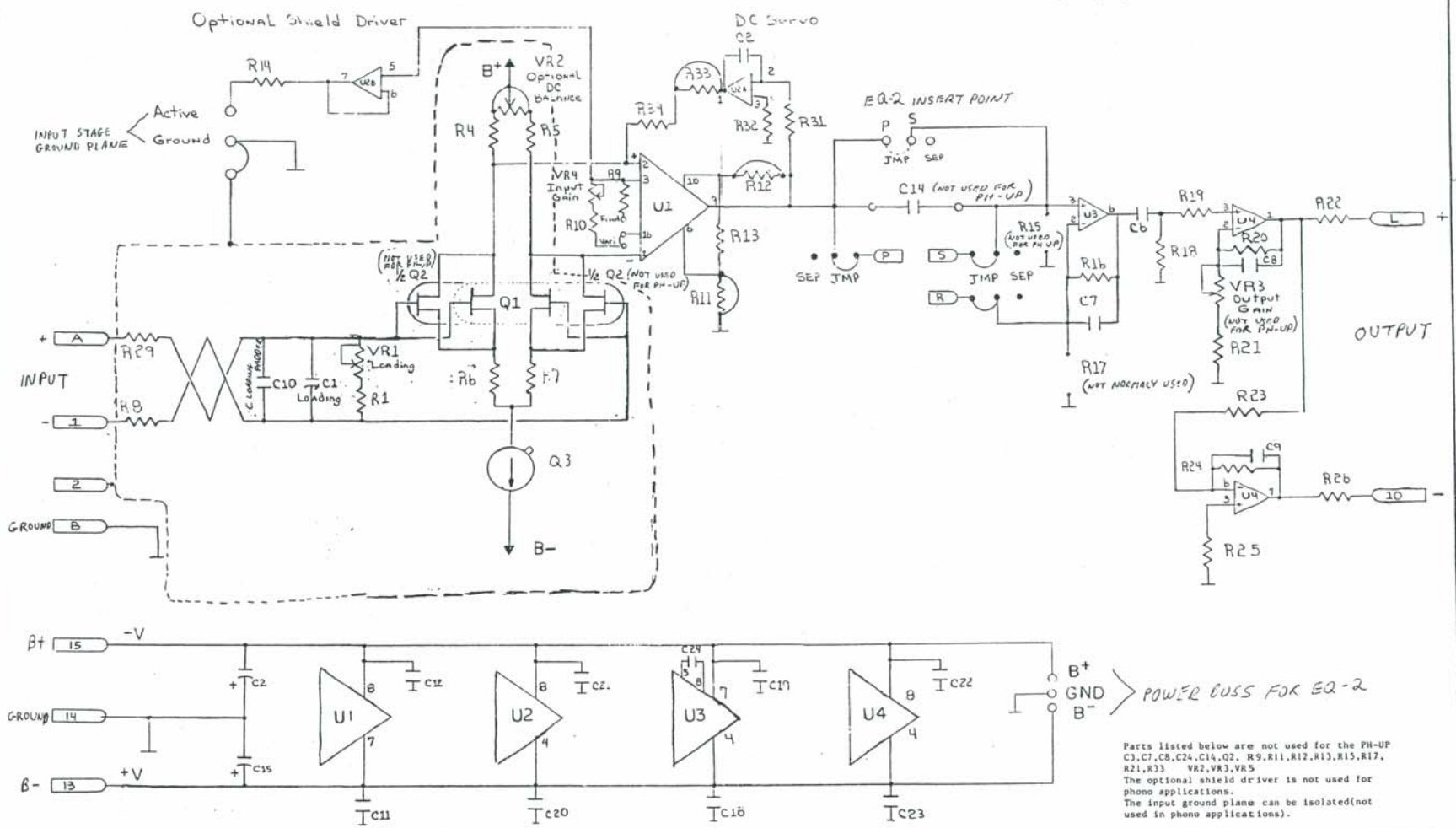

Parts listed below are not used for the PH-UP C3,C7,C8,C24,C14,Q2, R9,R11,R12,R13,R15,R17, R21,R33 VR2,VR3,VR5
The optional shield driver is not used for phono applications.
The input ground plane can be isolated(not used in phono applications).

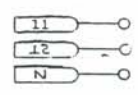

QTY REQD	FSCM NO.	PART OR IDENTIFYING NO.	NOMENCLATURE OR DESCRIPTION	MATERIAL SPECIFICATION

PARTS LIST

UNLESS OTHERWISE SPECIFIED DIMENSIONS ARE IN INCHES TOLERANCES ARE: FRACTIONS DECIMALS .XX ± .XXX ± ANGLES

CONTRACT NO. UP-2

APPROVALS / DATE

DRAWN 6-24-91

CHECKED

ISSUED 6/4/95

MATERIAL

FINISH

NEXT ASSY / USED ON

APPLICATION

DO NOT SCALE DRAWING

STRAIGHT WIRE™ AUDIO, INC.
Wilson Boulevard
Arlington, Virginia 22201
(703) [redacted] 522-7780

SIZE C | FSCM NO. | DWG. NO. | REV. 3

SCALE | SHEET

REVISIONS

ZONE	REV	DESCRIPTION	DATE	APPROVED

DWG. NO. | SH | REV.

BISHOP GRAPHICS ACCUPRESS REORDER NO. 4-10615

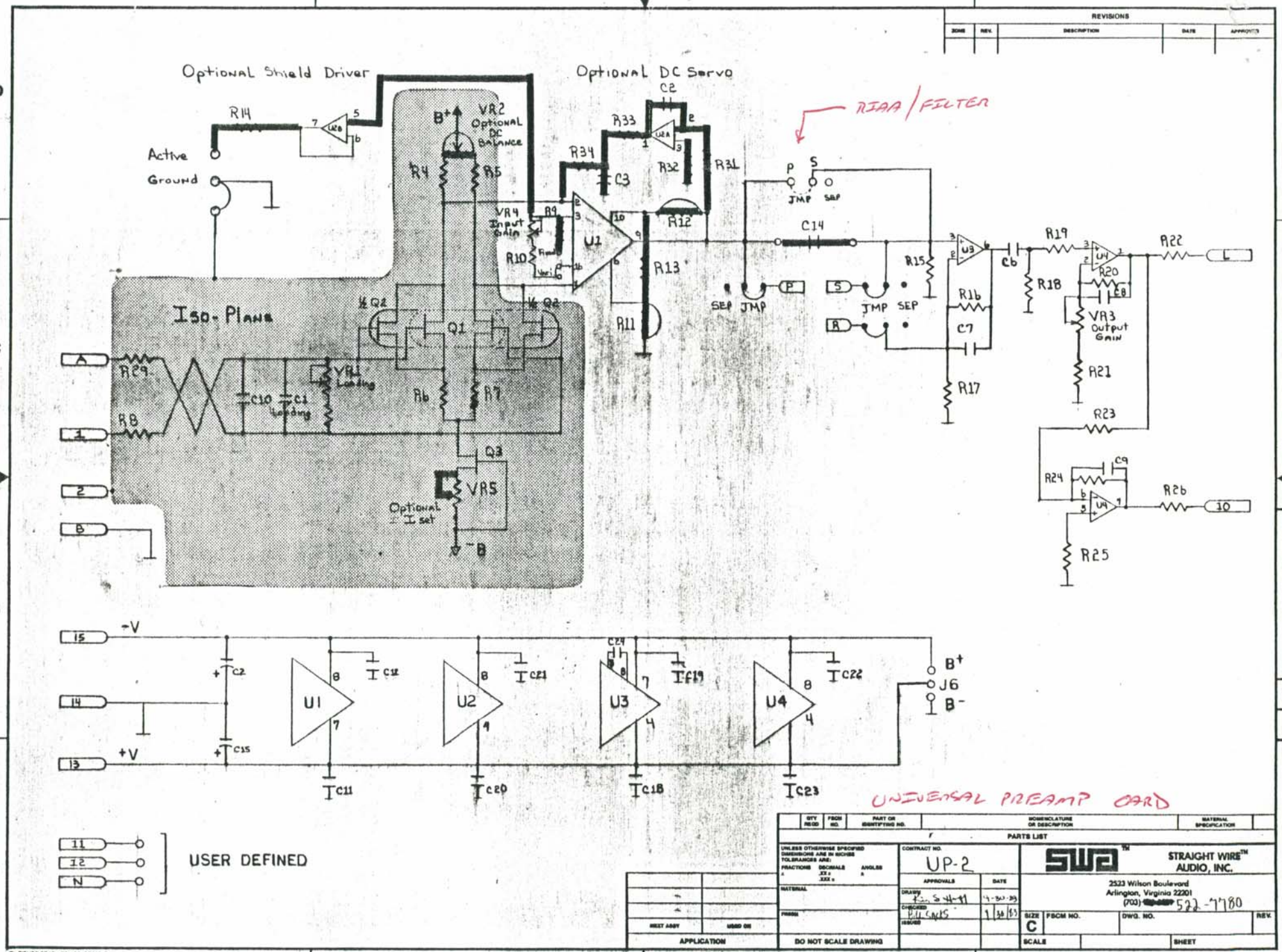

Optional Shield Driver
Optional DC Servo
RIAA / FILTER
Active
Ground
R14
U2B
B+
VR2 Optional DC Balance
R4
R5
R33
C2
U2A
R34
C3
R32
R31
VR4 Input Gain
R9
R10
U1
R12
R13
R11
P
S
JMP
SEP
C14
R15
U3
C6
R19
U4
R22
L
R18
R20
C8
VR3 Output Gain
R16
C7
R17
R21
R23
R24
C9
R26
10
R25
Iso-Plane
½ Q2
Q1
R29
R8
C10
C1 Loading
VR1 Loading
R6
R7
Q3
VR5
Optional I set
-B
A
1
2
B
15
14
13
-V
+V
C2
C15
U1
U2
U3
U4
C12
C21
C24
C19
C22
C11
C20
C18
C23
B+
J6
B-
11
12
N
USER DEFINED
UNIVERSAL PREAMP CARD
REVISIONS
ZONE
REV.
DESCRIPTION
DATE
APPROVED
QTY REQD
FSCM NO.
PART OR IDENTIFYING NO.
NOMENCLATURE OR DESCRIPTION
MATERIAL SPECIFICATION
PARTS LIST
UNLESS OTHERWISE SPECIFIED DIMENSIONS ARE IN INCHES TOLERANCES ARE:
FRACTIONS
DECIMALS
ANGLES
MATERIAL
FINISH
NEXT ASSY
USED ON
APPLICATION
DO NOT SCALE DRAWING
CONTRACT NO.
UP-2
APPROVALS
DATE
DRAWN
CHECKED
ISSUED
STRAIGHT WIRE™ AUDIO, INC.
2523 Wilson Boulevard
Arlington, Virginia 22201
(703) 522-7780
SIZE
C
FSCM NO.
DWG. NO.
REV.
SCALE
SHEET

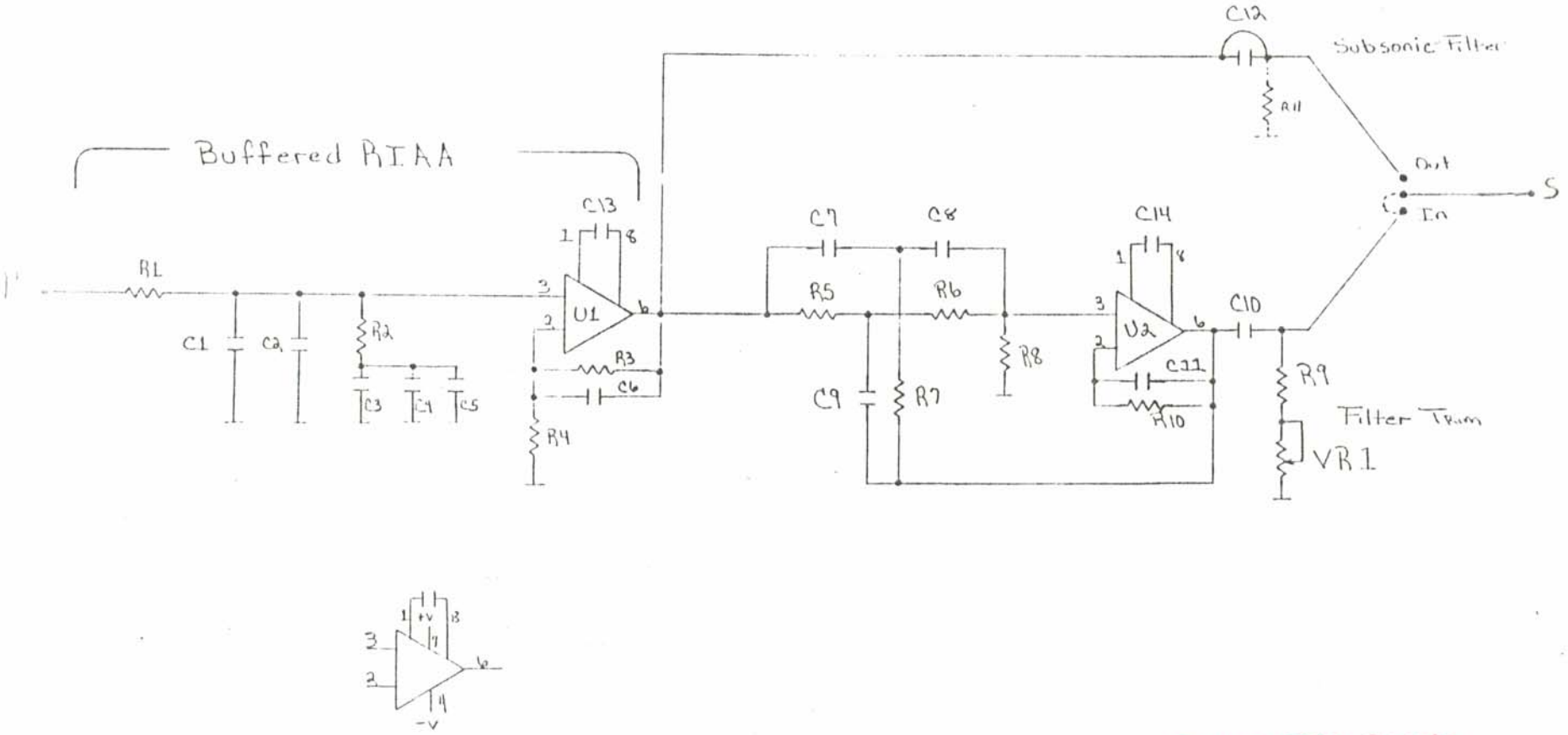

DAUGHTER BOARD

RIAA NETWORK / SUBSONIC FILTER

PARTS LIST

CONTRACT NO EQ 2A

STRAIGHT WIRE AUDIO

2523 Wilson Boulevard
Arlington, Virginia 22201
(703) 841-2779

SIZE C | FSCM NO | DWG NO | REV

SCALE | SHEET

DO NOT SCALE DRAWING

STRAIGHT WIRE AUDIO, INC.
2523 WILSON BOULEVARD
ARLINGTON, VIRGINIA 22201
703-522-7780

UPS 3 Power supply instructions.

Input power is applied to pins 3/4 & C/D. The input can be AC or DC, but it must be floating with respect to ground. AC input should be between 24 & 34 VAC. A floating DC input of 34 to 50 VDC may also be used.

Circut breaker 1 (the one closest to the PC board) is rated at 1.5A. CB 1 is ahead of the bridge rectifier and serves to protect the input power buss. This is most useful when multipule units are on the same master buss.

Circut breaker 2 (stacked on top of CB 1) protects the output of the electronic center tap and is in a feedback loop. There is no foldback current limiting until the breaker trips. The center tap breaker trips at 100mA for one second, transients pass without current limiting. The UPS 3 will operate with foldback limiting after the breaker trips. This feature allows the engineer to systematicly find the defective unit by observing the red and green LEDs while removing suspect cards. The system will then come back up and the breaker can be reset at that point.

The yellow LED indicates voltage feeding the regulator.

The trimpot adjusts output voltage. Range is ±5 to ±20 volts.

The output pins are:

15/S Positive-- 14/R Ground---13/P Negitive

Pins 1 & A are provided to suppliment the preregulator storage capacitors. DO NOT GROUND THE CAPACITOR CASE !! Pin 1 is plus pin A is minus. Very large caps will require an external electronic soft start,to prevent the input circut breaker from tripping on the input surge current.

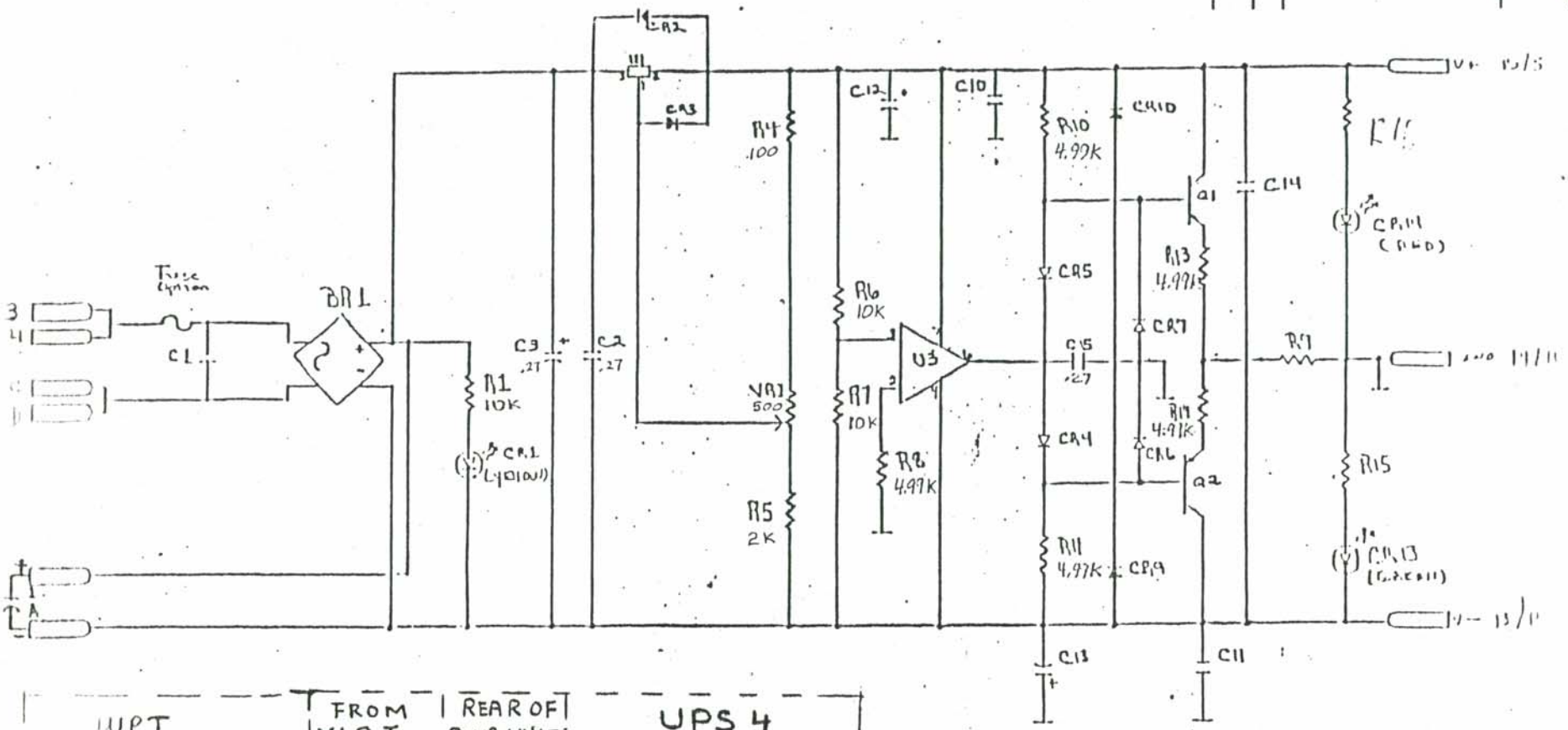

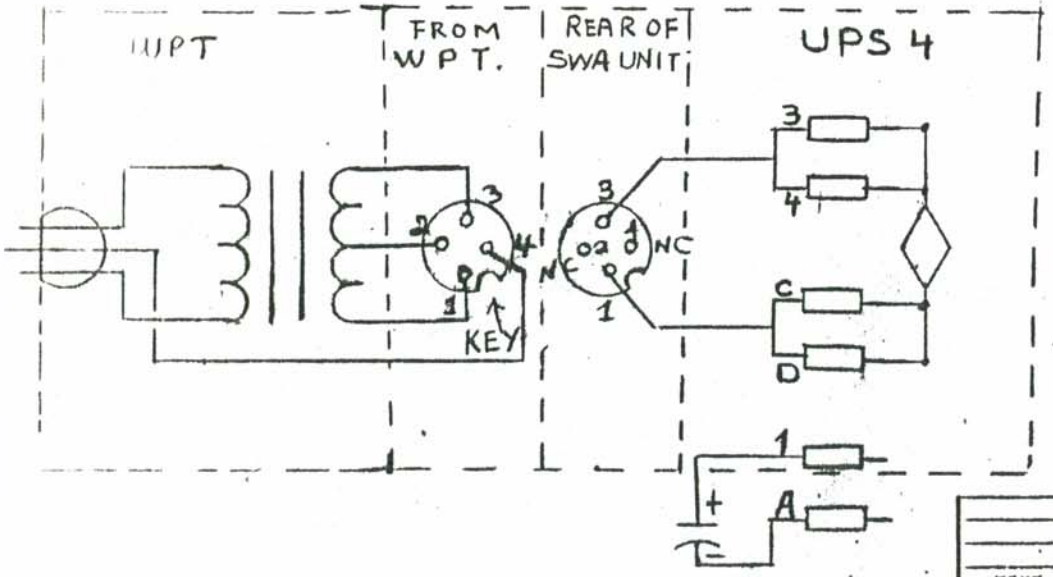

POWER SUPPLY CARD

UPS-4

4 3 2 1