McMARTIN INDUSTRIES, INC.
~~3104 Farnam Street~~ 4500 to 76th
Omaha, Nebraska ~~68131~~ 68127

McMartin

MEMBER EIA

NAB

PRELIMINARY INSTRUCTION MANUAL

TBM-4000A

FM-SCA MODULATION MONITOR

INSTRUCTION MANUAL

TABLE OF CONTENTS

TECHNICAL SPECIFICATIONS

Main Channel Modulation:

Operating Range	88 - 108 mHz
Modulation Range	± 75 KHz deviation - 100% mod. ± 100 KHz deviation - 133% mod.

RF Demodulator Input

Impedance:	50 ohms unbalanced
Sensitivity:	0.1 to 1 watt

Outputs - Main Channel

Audio output for monitoring circuits

Source Impedance	600 ohm balanced
Level	+4 dbm @ 100% modulation at 400 Hz
Distortion	Less than 1% (50 - 15,000 Hz)

Audio output for distortion measurement

Impedance	10K or greater
Level	7 Volts @ 100% modulation at 400 Hz
Frequency Response	30 - 15,000 Hz ± 0.5 Db

Distortion

Main Channel	0.25% (30 - 15,000 Hz)
Noise Level	-66 Db below 100% modulation at 400 Hz

Main Channel phone output

Impedance	20K ohms
Level	2.0 volts

Technical Specifications (Cont'd.)

Outputs - Main Channel (Cont'd.)

Composite output

Source Impedance	300 ohms
Level	0.30 volts Peak to Peak
Frequency Response	50 - 100,000 Hz ± 0.2 Db

Main Channel Peak Flasher

Peak flasher meets FCC requirements	Peak light adjustable to read positive and negative peaks from 50% to 120% modulation.

Main Channel Modulation Meter

Main Channel position

Accuracy	± 0.5 Db
Frequency Response	30 - 15,000 Hz ± 0.5 Db
Meter characteristic meets FCC requirements	

Total Modulation position

Accuracy	± 0.5 Db
Frequency Response	30 - 75,000 Hz ± 0.5 Db
Meter characteristic meets FCC requirements	

SCA Multiplex Modulation:

Operating Range	67 KHz Standard. 41 KHz and other frequencies optional.
Modulation Range	±6 KHz deviation - 100% mod. ±4 KHz deviation - 100% mod. Selection is made by front panel function switch.

Technical Specifications (Cont'd.)

SCA Multiplex Modulation: (Cont'd.)

Modulation Meter

Accuracy	±0.5 Db
Frequency Response	30 - 7500 Hz ±1 Db-67 KHz
Meter characteristics meet FCC requirements	30 - 5000 Hz ±1 Db-41 KHz

Peak Flasher Indicator

Peak light adjustable to read modulation peaks from 50 to 120%. Responds to modulation peaks of 1 millisecond deviation and remains on for 2 to 4 seconds as required by the FCC.

SCA Frequency Meter

Operating Range	Any two SCA sub-carriers selected by front panel selector switch.
Deviation Range	Zero Center Meter calibrated - ±4000 Hz.
Accuracy	Better than ±50 Hz at 67 KHz
Stability	Maintained by Crystal with .005 tolerance.

SCA Injection Circuit

Accuracy	±1%
Meter Indication	0-15% in 1% increments 0-30% in 2% increments

Outputs - SCA Subchannel

Audio output for monitoring circuits

Source Impedance	600 ohms balanced
Level	+4 DBM @ 100% modulation at 400 Hz and ±6 KHz deviation
Distortion	Less than 1% (400 Hz)

Outputs - SCA Subchannel (Cont'd.)

Audio output for distortion measurements

Impedance	10KΩ or greater
Level	7 volts @ 100% modulation at 400 Hz and ±6 KHz deviation
Frequency Response	30 - 7500 Hz ±1 Db (67 KHz)

Distortion

Subchannel	1% (400 Hz)
Noise Level	Better than 66 Db below 100% modulation at 400 Hz and ±6 KHz deviation.

Subchannel phone output

Impedance	20KΩ
Level	2.0 volts

Cross Talk

Main Channel into SCA Subchannel (30-15,000 Hz)	66 Db or better
Stereo into SCA Subchannel (23-53 KHz)	55 Db or better
SCA No. 1 channel into SCA No. 2 channel	66 Db or better
SCA No. 2 channel into SCA No. 1 channel	66 Db or better
NOTE: Cross Talk can be measured internally down to -70 Db.	
SCA into Main Channel	66 Db or better

Power Requirements

105 - 125 volts AC, 50/60 Hz 45 Watts

Fuse

0.5 amp. slo-blo

Ambient Temperature Range

10 - 50° C

Technical Specifications (Cont'd.)

Dimensions

Width	Standard 19" rack panel mount
Height	8-3/4"
Depth	$12\frac{1}{2}$" overall
Weight	25 pounds

Finish — McMartin blue and brushed aluminum

MODULE, TRANSISTOR & DIODE COMPLEMENT

Symbol	Description	Function
MM-601	1 per unit	Plug-in composite amplifier
MM-603	4 per unit	Plug-in audio amplifier
MM-604	2 per unit	Plug-in DC meter amplifier
MM-606	1 per unit	Wide-band demodulator
MM-607	2 per unit	Peak flasher
MM-608	1 per unit	Phase splitter
MM-609	1 per unit	DB amplifier
MM-610	1 per unit	SCA demodulator
MM-614	3 per unit	Wide-band audio amplifier
MM-615	1 per unit	Squelch amplifier
MM-617	1 per unit	Dual Wide-band Amplifier
Q-1	SE-4010	Isolation amplifier
Q-2	SE-4010	Composite amplifier
Q-3	SE-4002	#1 Subchannel Oscillator
Q-4	SE-4002	#2 Subchannel Oscillator
Q-5	SE-4002	Squelch Limiter
Q-6	SF-4863A	$\frac{1}{2}$ High Z FET Amplifier
Q-7	2N3053	$\frac{1}{2}$ Db Voltage Amplifier
Q-8	40328	Voltage regulator
Q-9	40328	Voltage regulator
Q-10	40328	Voltage regulator
Q-11	40328	Voltage regulator

MODULE, TRANSISTOR & DIODE COMPLEMENT (Cont'd.)

Symbol	Description	Function
D-3	1N3604	Subchannel Limiter
D-2	1N3604	Subchannel Limiter
D-1	1N3606	Voltmeter Diode
D-4	1N3606	Voltmeter Diode
D-6	1N3604	Squelch Limiter
D-5	1N3604	Squelch Limiter
D-7	BY127	Power Rectifiers
D-8	BY127	Power Rectifiers
Z-1	13 Volt	Zener Diode
Z-2	36 Volt	Zener Diode
Z-3	20 Volt	Zener Diode
Z-4	24 Volt	Zener Diode
Z-5	24 Volt	Zener Diode
Z-6	24 Volt	Zener Diode
Z-7	36 Volt	Zener Diode
Z-8	36 Volt	Zener Diode
Z-9	90 Volt	Zener Diode

PLUG-IN MODULE, TRANSISTOR & DIODE COMPLEMENT

PLUG-IN COMPOSITE AMPLIFIER MM-601A

Q-1	SE-4010	Voltage amplifier
Q-2	2N3053	Audio amplifier
Q-3	SE-4010	Voltage amplifier
Q-4	2N3053	Audio amplifier

PLUG-IN AUDIO AMPLIFIER MM-603

Q-1	SE-4001	Amplifier
Q-2	2N2102	Amplifier

PLUG-IN DC METER AMPLIFIER MM-604

Q-1	SF-4863A	$\frac{1}{2}$ of DC amplifier
Q-2	SF-4863A	$\frac{1}{2}$ of DC amplifier

WIDE-BAND DEMODULATOR MM-606

Q-1	40245	Local oscillator
Q-2	40243	Mixer
Q-3	40245	Limiter
Q-4	40245	Limiter
Q-5	40245	Limiter
Q-6	SE-4001	Audio amplifier
Q-7	2N2102	Audio amplifier
D-1	1N51	RF doubling diode
D-2	1N3604	Counter detector
D-3	1N3604	Counter detector

PEAK FLASHER MM-607

Q-1	SF-4863A	Isolation amplifier
Q-2	SE-4001	½ of a Schmitt trigger
Q-3	SE-4001	½ of a Schmitt trigger
Q-4	2N3053	Low impedance pulse amplifier
Q-5	SE-4863A	DC Amplifier
Q-6	2N2102	Buffer
Q-7	2N2102	Switching transistor

PHASE SPLITTER MM-608A

Q-1	2N2102	Anode follower
Q-2	2N2102	Phase splitter
Q-3	2N2102	Negative peak amplifier
Q-4	2N2102	Positive peak amplifier

DB AMPLIFIER MM-609

Q-1	SE-4001	Amplifier
Q-2	2N2102	Amplifier

SCA DEMODULATOR MM-610

Q-1	SE-4001	Schmitt trigger
Q-2	SE-4001	Schmitt trigger
Q-3	SE-4001	Multi-Vibrator
Q-4	2N2102	Multi-Vibrator
D-1	1N3604	Pulse Rectifier
D-2	1N3604	Pulse Rectifier

PLUG-IN MODULE, TRANSISTOR & DIODE COMPLEMENT (Cont'd.)

WIDE-BAND AUDIO AMPLIFIER MM-614

Q-1	SE-4010	Amplifier
Q-2	SE-4010	Amplifier

SQUELCH AMPLIFIER MM-615

Q-1	SE-4002	Plus and Minus Amplifier
Q-2	SE-4002	Negative Amplifier
Q-3	SE-4002	Switch Transistor
Q-4	SE-4002	Switch Transistor

DUAL WIDE-BAND AMPLIFIER MM-617

Q-1	SE-4001	Voltage amplifier
Q-2	2N3053	Audio amplifier
Q-3	SE-4001	Voltage amplifier
Q-4	2N3053	Audio amplifier

GENERAL DESCRIPTION

The McMartin TBM-4000A, FM Main Channel/SCA Modulation Monitor, is an all Silicon solid state monitor and is a completely self-contained unit for measurements of all modulation characteristics of the FM Broadcast station. The TBM-4000A features three meters for simultaneous measurements of main channel or total modulation, subchannel frequency and subchannel modulation.

For simplicity of operation the various metering functions are incorporated in one switch to measure all the important characteristics of the composite signal. These functions include RF input level, total modulation, main channel modulation, SCA injection level, subchannel modulation, FM-S/N and AM-S/N. In addition, the TBM-4000A will measure the frequency of the SCA carrier, crosstalk between the main channel and SCA, SCA into main channel, and SCA into SCA.

The modulation meters are peak indicating devices capable of measuring true peak value, regardless of wave form. The right meter is also used as an audio voltmeter, which is used to measure cross talk between the main and the SCA subchannels, FM-S/N or AM-S/N. When the function switch is in the FM-S/N or AM-S/N position, the signal is automatically de-emphasized. Also, the meter is highly damped in all the db positions. With the cross talk switch in the operate position, the meter ballistics conform to the FCC requirements. NOTE: THE VOLTMETER IS PROTECTED AGAINST SEVERE OVERLOAD.

A BNC connector is located on the rear of the chassis and gives a true display of the modulation present. The output Z is low, minimizing error when a cable is used to connect to test equipment or other monitors such as a McMartin TBM-2000A for monitoring an additional subchannel. A wide-band oscilloscope can also be connected to this connector to verify measurements.

The TBM-4000A features modular construction; almost all of the circuits are plug-in units for simplified service in the field. Each plug-in module is isolated from the power supply so that in case of failure or short circuit in any one unit, it will not short circuit the power supply, disabling the rest of the monitoring functions.

All critical circuits have double regulation in the power supply for added stability. All transistors are operated at one half or less of their rated voltage for greater reliability.

A high speed peak indicating light, located on the front panel, is adjustable from 50-120% modulation. The light remains on for a period of two to four seconds as required by the FCC, regardless of the duration of the overmodulation peak. A jack is provided for a

remote peak indicating light. The peak indicating light will flash when positive and negative peaks exceed the preset level. In addition, a polarity switch is provided to measure modulation in either positive or negative direction read only on the modulation meter.

A high speed indicating light is also used for reading the peaks of the subchannel modulation.

Two terminal strips located on the rear of the chassis provide connections for aural monitoring of either main or subchannel; also, for connection of an external distortion meter.

CIRCUIT DESCRIPTION

The sampled RF from the transmitter is fed to the adjustable RF input attenuator. The RF is adjusted by the RF level control located on the rear of the unit to a level suitable for proper operation. The correct level is indicated by the left meter (with the function switch in the RF level position). Two diode rectifiers convert the RF into a DC voltage to drive the meter. With the meter reading 100% it indicates that the proper RF level is fed to the input of the wide-band demodulator, MM-606. This adjustment is not critical except when making an AM-S/N reading.

The RF signal from the variable attenuator is further attenuated by a fixed resistor, which feeds the MM-606 FM wide-band demodulator. An output from the MM-606 is fed through isolation resistor R-1 (5600Ω) to the input of the phase splitter Module #2, (MM-608). A front panel polarity switch SW-1 is used to select modulation in either the positive or negative direction as read on the modulation meter only. The output from the polarity switch is fed to Q-1, an isolation stage used to eliminate loading of the phase splitter. The output of Q-1 feeds R-5 (10K ohm) calibration potentiometer. With the function switch in the total modulation position the output from the calibration potentiometer R-5 is fed to the input of the wide-band audio amplifier, Module #4, (MM-603). This controls the amount of modulation fed to the input of the wide-band audio amplifier. The output impedance of this amplifier is very low, suitable for feeding diode (D-1), thus, charging capacitor C-9 to a peak value. This peak value is measured with an extremely high input impedance VTVM type circuit. DC meter amplifier Module #5, (MM-604) consists of 2 FET's in a balanced differential amplifier. The left meter, M-1, is connected between the two source elements. Thus, the meter sees an extremely low impedance. This gives a meter circuit with rapid rise time and excellent damping.

A second output from Module #2, (MM-608) (pin #7), which contains both negative and positive pulses are fed to the peak light calibration potentiometer, R-7. This controls the level of the positive and negative peaks fed to the peak flasher circuit, Module #6, (MM-607). The peak flasher amplifier will respond to negative and positive modulation peaks of very short duration. Capacitor C-13 and Resistor R-15 comprise a RC time delay which will hold the light on for at least 2 to 4 seconds, regardless of the length of the overmodulation pulse. The power supply is double regulated to insure stable operation under all conditions. A socket is provided on the rear chassis for an external peak light.

A second output from the MM-606 wide-band FM demodulator is fed to Module #3, (MM-614) composite amplifier. The low output impedance of MM-614 is fed through R-24 to a 15KHz low-pass filter, which removes all frequencies above 15KHz. The output of the filter is terminated with two calibrating potentiometers, R-25 and R-26. With the function switch, SW-2 in the main channel position, the output of the potentiometer R-25, is fed to the input of the wide-band audio amplifier, Module #4, (MM-603). With the function switch in the FM-S/N ratio position, the signal is fed from calibration potentiometer R-26 to the audio voltmeter circuit, which will be described later. The audio signal from the 15KHz low-pass filter is also fed through R-27 isolation resistor to the main channel audio amplifier Module #7, (MM-603). The output from this amplifier is fed through C-17 to the main channel terminal board marked HI-Z on the rear of the chassis. Strapping the HI-Z terminal gives a balanced 600 ohm output at the 600 ohm terminals.

The composite signal from the wide-band demodulator is fed through Capacitor (C-23) to Module #8, (MM-601), a dual wide-band amplifier. The MM-601 has extremely low intermodulation distortion to prevent the generation of any cross talk. Also, the output impedance is low, suitable for driving the following band pass filters: The dual low output impedance signals are fed through subchannel selector switch SW-3, to the dual band pass filters FL-1 and FL-2. These filters have sharp skirted characteristics to reject all of the main channel frequencies, leaving only the desired SCA carrier. The dual filters consist of a phase linear wide-band section for recovery of modulated SCA audio and a narrow band section for measurement of the SCA carrier injection. The outputs of Filters FL-1 and FL-2 are fed to equalizing potentiometers R-33, R-34 and R-36, which compensate for slight variation between filters and are referenced against the fixed voltage dividers R-35A and B. The four outputs from the filters are fed to function switch SW-2. This switch selects either the wide or narrow band output signal and feeds this to Module #9, (MM-617). This is a dual high gain amplifier. One section is used to amplify the SCA signal to a suitable level for measurement purposes. The output from Pin #5 is fed to a voltage divider R-38A and B. An injection switch, SW-4, located on the top of the chassis selects 0-15% or 0-30% injection as read on the lower scale of the left meter, M-1. This allows for a more accurate reading of the percentage of SCA injection.

The subcarrier signal from Switch SW-4 is fed to the injection calibration potentiometer R-50. With the function switch SW-1 in either of the two injection positions, the signal is fed to the modulation metering circuit and the percentage of injection is read on either of the two lower injection scales. Switch SW-4 selects the

scale used. It is, however, recommended that the 0-15% position be used for more accurate indication of injection.

The recovered SCA carrier from the wide-band filter has been selected by subchannel selector switch SW-3, and is fed to the second input of Module #9, (MM-617), where it is amplified by at least 15 Db. This amplified subcarrier is fed to a 2 diode limiter D2 and D3. This limited signal is fed into the demodulation Module #10, (MM-610). This module consists of a Schmitt trigger and a monostable multivibrator which produces pulses with a fixed width and amplitude. These pulses are rectified to produce current pulses which are proportional to frequency deviation and the resulting DC current is applied to frequency Meter M-2. This operation makes the response of M-2 directly proportional to frequency. In order to balance out the reading which would be obtained with an SCA signal, some current is applied in reverse through Meter M-2. This current is generated by a voltage drop across the bias resistor in the monostable oscillator which carries the same current that produced the pulses. The balancing current in the meter varies in accordance with the constant current. Thus, should there be any variation in the characteristics of the transistors or in supply voltage, the meter will still read zero center with the SCA signal applied. The current applied to the Meter M-2 consists of a series of pulses of DC current and the AC components are bypassed to ground by a large capacitor, C-64. This prevents the meter from trying to follow modulation.

Two internal crystal oscillators, Q-3 and Q-4, are incorporated in the TBM-4000A monitor for calibrating the demodulator. Only one subcarrier is supplied - second subcarrier is optionally available. The subchannel selector switch SW-3, will select the desired crystal frequency which is used to calibrate the frequency meter. R-48, a vernier front panel control is used to precisely zero the meter when the crystal controlled frequency is used to calibrate the demodulator. Potentiometers R-41 and R-43 are used for controlling the reverse current through the frequency meter, facilitating meter centering.

Potentiometers R-45 and R-46 are used to control the sensitivity of the deviation of the meter. The demodulator measures the frequency of the SCA carrier by comparing it against the internal crystal standard.

Pulses from Pin #6 of the Module #10, (MM-610) are fed to integrating Resistor R-47 and Capacitor C-29. These partially integrated pulses are amplified by Module #11, (MM-614) and are completely integrated by the 7.5 KHz low pass filter FL-3.

The recovered audio from the filter is amplified by Module 12, (MM-614) and fed to the modulation calibration potentiometer R-53.

Also, the audio is fed through isolation resistor R-52 to Module #13, (MM-603), where it is amplified to a level of 7 volts (RMS). De-emphasis is accomplished by a feedback network, C-35, 36 and R-55. De-emphasis switch, SW-8, is provided to change the de-emphasis from 75 to 150μseconds.

The audio output from the modulation calibration potentiometer R-53 is fed through R-51 to the function Switch SW-2. The center arm of the function Switch SW-2 is fed to the audio voltmeter circuit, which will be described later. R-51 and C-34 comprise a de-emphasis network which is switched in by the No. 2 section of Xtalk-S/N Switch, SW-5, de-emphasizing the (SCA Audio Signal only) in all positions excepting operate.

The audio voltmeter circuit consists of amplifier Module #14, (MM-603), in conjunction with the Xtalk-S/N Switch, which consists of a precision resistor network R-120A-B-C-D-E-F, in a voltage divider circuit. Q-6 is an FET with very high input impedance which will not load the voltage divider, thus minimizing error. Q-6 is directly coupled to Q-7, giving an output impedance which is low and suitable for driving amplifier Module #15, (MM-609). This is a high gain amplifier and the output impedance is low, suitable for driving diode D-4, charging Capacitor C-61 to a peak value. This peak value is measured with the high input impedance VTVM type circuit of Module #16, (MM-604). The right meter, M-3, is connected between the two source elements. Thus, the meter sees an extremely low impedance giving a meter circuit with rapid rise time and excellent damping.

The audio voltmeter is automatically damped when the Xtalk-S/N switch is turned to any position except "O" or "Operate" position. Capacitor C-63 is shunted across the meter movement which highly damps the meter for more precise measurement. NOTE: THE METER IS PROTECTED AGAINST SEVERE OVERLOAD.

The ballistics of the right and left meters are controlled by R-14, C-10, R-90 and C-60. The rise time is controlled by these capacitors. Meter decay is controlled by R-13 and R-87. The two DC meter amplifiers MM-604 are stabilized by a special balancing circuit and double regulation in the power supply.

The subchannel deviation switch SW-7 is used to change the gain of the audio voltmeter to correspond to ±4KHz or ±6KHz. When the switch is in the ±4KHz position, it short-circuits R-70, increasing the gain corresponding to 2KHz less deviation.

A peak flasher circuit similar to the main channel is incorporated. The input to the peak flasher Module #18, (MM-607) is fed from the junction of the subchannel deviation switch and is automatically

calibrated in both the ±4KHz and ±6KHz positions. The characteristics of this peak flasher are identical to the main channel. A socket is provided on the rear of the chassis for an external subchannel peak light.

A second output from Pin #6 of Module #9, (MM-617) is fed to the mute control potentiometer, R-72, located on the rear of the chassis. This controls the amount of SCA carrier fed to Q5, an isolation amplifier. The output is fed to a 2 diode limiter, D5 and D6. This maintains a constant level to the mute amplifier Module #17, (MM-615) regardless of the amount of SCA injection over 5%.

Module #17, (MM-615) consists of a relay circuit with fast make and a slow break reducing transient noise when fast muting of the subcarrier is employed in the transmission. This circuit also short circuits the frequency meter when no carrier is present, preventing the meter from going off scale. R-78 and C-54 comprise a filter to eliminate clicks when the relay contacts open and close.

The power supply is well regulated, using a Darlington type emitter follower employing 3 transistors and 2 Zener reference voltage diodes. The circuit also functions as a capacity multiplier, eliminating any AC ripple in the power supply. Several of the plug-in amplifiers are further regulated by Zener diodes. The voltage is held within 1% with the line voltage varying from 105 to 140 volts. All stages are fed through isolation resistors and are all decoupled. Any one stage could be short circuited without seriously affecting the others.

INSTALLATION

Upon receipt of your TBM-4000A, remove it from the shipping carton and inspect carefully for any damage caused in transit due to rough handling. If damage is found, notify the shipping agency and advise McMartin Industries, Incorporated of such action.

The TBM-4000A should be mounted where there is adequate ventilation. The unit should not be mounted above high heat producing equipment.

CAUTION: THE TEMPERATURE SHOULD NOT EXCEED 130°F.

Connect the AC cord to the 117 volt AC source. Connect the RF cable from the pick-up loop to the input jack on the rear of the chassis.

CAUTION: DO NOT EXCEED 1 WATT RF INPUT

The TBM-4000A has been thoroughly checked and calibrated prior to shipment and should require no internal adjustment. However, after the unit has been installed, the following checks should be made.

1. Check the mechanical zero setting of each meter before turning the monitor on.

2. Turn power on and allow sufficient time for stabilization. The monitor has much filtering and requires some time for stabilization.

OPERATION

ADJUSTMENT OF RF INPUT LEVEL:

CAUTION: BEFORE APPLYING RF INPUT, TURN THE RF LEVEL CONTROL TO MINIMUM. Slowly adjust RF level for a reading of 100% on left meter (with function switch in RF level position). If the meter tends to reverse when increasing the level control, this indicates too much RF applied to monitor.

NOTE: MONITOR NEED NOT HAVE AC POWER APPLIED FOR THIS ADJUSTMENT.

This is the only adjustment required for monitoring the RF output of the transmitter.

MONITORING TOTAL MODULATION:

Function Switch SW-2 must be in the total modulation position for reading the complete modulation of the transmitter on the left meter.

POLARITY SWITCH:

The switch may be left in either the positive or negative positions, as the peak flasher automatically will respond to positive and negative peaks.

MAIN CHANNEL PEAK MODULATION ADJUSTMENT:

This adjusts the overmodulation peak indicator, and should never be set to exceed 100%. This is the most important function of the monitor. The peak light will remain on for at least two seconds every time overmodulation occurs, in either positive or negative direction.

SPECIAL NOTE: With the normal broadcast program material, it will not be uncommon for the peak flasher to light at a 100% setting while the total modulation will average about 30 to 60% on peaks. The peak flasher will catch modulation peaks which are much too short for complete meter response. THE PEAK LIGHT MUST BE THE PRIME SOURCE OF INDICATING OVERMODULATION. The peak light calibration is always correct regardless of the position of any of the function switches.

MONITORING THE MAIN CHANNEL MODULATION:

With the function switch SW-2 in the main channel modulation position it will indicate program information that is occurring on

MONITORING THE MAIN CHANNEL MODULATION (Cont'd.)

the main channel only. 19KHz pilot carrier or any SCA subcarriers are completely eliminated with the switch in this position.

MEASUREMENT OF DISTORTION OF THE MAIN CHANNEL:

Modulate the transmitter 100% as read on total modulation meter.

Remove the jumper between the (HI-Z) terminals on the rear terminal board marked Main Audio.

Connect a distortion analyzer to the terminals marked GROUND and HI-Z.

The de-emphasis switch should be in the "IN" position when distortion measurements are taken.

X Distortion may also be measured from the main channel phone jack on the front panel.

MEASUREMENT OF AM SIGNAL TO NOISE RATIO OF THE TRANSMITTER:

Adjust the RF input level for a reading of exactly 100% on the left meter with the function switch in the RF level position.

Remove all modulation from the transmitter.

Turn the function switch to AM-S/N position.

Turn the Xtalk-S/N Switch to the right and read the AM-S/N on the right meter (Refer to Operation of Crosstalk Switch).

Return function switch and Xtalk-S/N switch to operate position.

MEASUREMENT OF FM SIGNAL TO NOISE RATIO OF THE TRANSMITTER:

Remove all modulation from the transmitter.

Turn the Xtalk-S/N switch to the right and read the FM-S/N on the right meter (Refer to Operation of Crosstalk Switch).

Return the function Switch and Xtalk-S/N Switch to operation position.

SUBCHANNEL SELECTION:

The subchannel selector switch is designated as No. 1 Sub-cal., No. 1 Sub-op., and No. 2 Sub-op. and No. 2 Sub-Cal. The two No. 1 Sub positions are used for frequencies below 45 KHz. The No. 2 Sub positions are used for frequencies above 45 KHz. (Other combinations optional). Turn the subchannel selector switch to the desired channel.

NOTE: THIS SWITCH MUST BE IN THE CORRECT SUBCHANNEL OPERATE POSITION FOR THE OPERATION OF THE REST OF THE FUNCTION OF THE MONITOR.

NOTE: ONLY ONE SUBCHANNEL WILL BE OPERATIVE UNLESS A SECOND SUBCHANNEL HAS BEEN ORDERED AS OPTIONAL EQUIPMENT.

MONITORING SCA INJECTION:

Turn the subchannel selector switch to the desired subchannel being monitored.

If the station is transmitting an SCA carrier(s), place the deviation switch (SW-7), in the desired position: if two subcarriers are transmitted, separated only by 5KHz, use the ±4KHz position.

Adjust the SCA injection level of the transmitter to the desired injection (10% is maximum if the station is transmitting stereo), as read on the lower injection scale of the left meter. 30% injection is the maximum allowed if the station is not engaged in stereo. This may be distributed into one or more carriers.

Either of the two injection positions of the function switch can be used; however, the injection may fluctuate severely with modulation when the switch is in the ±4KHz position. The last or ±4 position should be used only for reading injection of an unmodulated carrier.

CAUTION: THE INJECTION SWITCH (SW-4), LOCATED ON THE TOP OF THE CHASSIS IS NORMALLY IN THE 0-15% INJECTION POSITION. IF THE OPERATOR DESIRES TO INJECT MORE THAN 15% THE SWITCH MUST BE MOVED TO THE 0-30% INJECTION POSITION AND THE INJECTION READING WILL NOW BE MULTIPLIED BY 2.

MONITORING SCA MODULATION:

Turn the subchannel selector switch to the desired subchannel being monitored.

The modulation meter will indicate the SCA modulation on the right meter.

MONITORING SCA MODULATION (Cont'd.)

100% modulation in the ±6KHz position indicates a carrier deviation of ±6KHz.

100% modulation in the ±4KHz position indicates a carrier deviation of ±4KHz.

It is recommended that the ±6KHz position be used as an overall better signal to noise ratio is obtained.

SCA PEAK MODULATION ADJUSTMENT:

Turn the subchannel selector switch to the desired subchannel being monitored.

The peak modulation control is adjustable from 50 - 120%. The overmodulation peak indicator should never be set to exceed 100%. The peak light will remain on for at least two seconds every time overmodulation occurs. The peak indicator light may flash at a 100% setting while the modulation meter may average only around 60 to 85%. The peak flasher will catch modulation peaks which are much too short for complete meter response.

NOTE: THE PEAK FLASHER MUST THEREFORE BE THE PRIME SOURCE FOR INDICATING OVERMODULATION.

The peak indicator light will operate in all positions of the function switch. Please note also that it is automatically calibrated in either of the two subchannel deviation positions.

SPECIAL NOTE: The peak flasher will only indicate modulation peaks on the subchannel selected.

MONITORING THE FREQUENCY OF THE SCA CARRIER:

Turn the subchannel selector switch to the desired subchannel calibrate position.

Adjust the front panel frequency meter zero control located directly under the frequency meter for a "0" reading.

Turn the subchannel selector switch to the subchannel operate position.

The meter will now read the subcarrier frequency. If the meter reads on the minus side, the subcarrier is below frequency; on the plus side, the subcarrier is above frequency.

OPERATION OF CROSSTALK SIGNAL TO NOISE SWITCH:

The right meter is in effect an audio voltmeter calibrated in 10 Db steps. Turning the Xtalk-S/N switch clockwise increases the gain 10 Db in each position.

An example for reading Crosstalk or Signal to Noise Ratio: If the right meter reads -3 Db in the 50 Db position, the ratio would be -53 Db below 100% modulation. The meter circuit is automatically de-emphasized and highly damped in all positions excepting operate.

The ballistics conform to FCC requirement in the operate position.

CAUTION: THE CROSSTALK-S/N SWITCH MUST BE LEFT IN THE OPERATE POSITION AS THE METER CAN BE DAMAGED IF ALLOWED TO FUNCTION ON MODULATION IN A MAGNIFIED POSITION.

MEASUREMENT OF CROSSTALK - MAIN CHANNEL INTO SUBCHANNEL:

Turn the subchannel selector switch to the desired subchannel being monitored.

Adjust theSCA injection of the transmitter to the desired injection (10% is maximum if the station is transmitting stereo) as read on the lower injection scale of the left meter. 30% injection is the maximum allowed if the station is not engaged in stereo.

Remove all modulation from the SCA channel.

Turn the function switch to the total modulation position if stereo is being transmitted. If non-stereo use main channel position.

Modulate the main channel of the transmitter 80%, as read on the left meter.

NOTE: OTHER MODULATION COMBINATIONS MAY BE USED IF NON-STEREO. THE COMBINATIONS MUST NOT EXCEED 100% MODULATION AS READ ON THE LEFT METER WITH THE FUNCTION SWITCH IN THE TOTAL MODULATION POSITION.

Turn the Xtalk-S/N Switch clockwise until a reading appears on the right meter and read the crosstalk. (Refer to Operation of Crosstalk Signal to Noise Switch).

Return the Xtalk-S/N Switch to operate.

NOTE: CROSSTALK MAY ALSO BE CHECKED WITH NORMAL PROGRAM MATERIAL ON THE MAIN SUBCHANNEL INSTEAD OF TONES.

MEASUREMENT OF CROSSTALK - NO. 1 SUBCHANNEL INTO NO. 2 SUBCHANNEL:

Turn the subchannel selector switch to No. 1 operate position.

Modulate the No. 1 subchannel of the transmitter 100% with 400 Hz signal as read on the right meter of the TBM-4000A.

Turn the subchannel selector switch to No. 2 Sub-op. position.

Adjust the No. 2 subchannel injection of the transmitter to the desired level as read on the lower injection scale of the left meter.

NOTE: DIFFERENT COMBINATIONS OF INJECTIONS MAY BE USED. THE COMBINATIONS MUST NOT EXCEED 30% TOTAL MODULATION.

Remove all the modulation from the #2 Subchannel of the transmitter.

Turn the Xtalk-S/N Switch clockwise until a reading appears on the right meter and read the crosstalk. (Refer to Crosstalk Signal to Noise Switch).

Return the Xtalk-S/N Switch to operate.

NOTE: CROSSTALK MAY ALSO BE CHECKED WITH NORMAL PROGRAM MATERIAL ON THE NO. 1 SUBCHANNEL INSTEAD OF TONES.

MEASUREMENT OF CROSSTALK - NO. 2 SUBCHANNEL INTO NO. 1 SUBCHANNEL:

Turn the subchannel selector switch to No. 2 operate position.

Modulate the No. 2 subchannel of the transmitter 100% with 400 Hz signal as read on the right meter of the TBM-4000A.

Turn the subchannel selector switch to No. 1 Sub-op. position.

Adjust the No. 1 subchannel injection of the transmitter to the desired level as read on the lower injection scale of the left meter.

NOTE: DIFFERENT COMBINATIONS OF INJECTIONS MAY BE USED. THE COMBINATIONS MUST NOT EXCEED 30% TOTAL MODULATION.

Remove all modulation from the No. 1 Subchannel of the transmitter.

MEASUREMENT OF CROSSTALK - NO. 2 SUBCHANNEL INTO NO. 1 SUBCHANNEL (Cont'd.)

Turn the Xtalk-S/N Switch clockwise until a reading appears on the right meter and read the crosstalk. (Refer to Crosstalk Signal to Noise Switch).

Return the Xtalk-S/N Switch to operate.

NOTE: CROSSTALK MAY ALSO BE CHECKED WITH NORMAL PROGRAM MATERIAL ON THE NO. 2 SUBCHANNEL INSTEAD OF TONES.

MEASUREMENT OF CROSSTALK - SCA INTO MAIN CHANNEL:

Turn the function switch to either injection position.

Turn the subchannel selector switch to the desired channel.

Adjust theSCA injection of the transmitter for the desired injection as read on the lower injection scale of the left meter. (10% is maximum if the station is transmitting stereo. 30% injection is the maximum allowed if the station is not engaged in stereo).

Turn the function switch to the main Xtalk position.

Remove all of the main channel modulation.

Modulate the SCA subchannel 100% with a 400 Hz signal as read on the right meter.

Crosstalk may be measured by rotating the Xtalk-S/N Switch to the right until a reading is obtained on the right meter. (Refer to Operation of Crosstalk-S/N Switch in the TBM-4000A).

Return the Xtalk-S/N Switch to operate.

MEASUREMENT OF DISTORTION OF THE SUBCHANNEL:

Turn the subchannel selector switch to the desired subchannel being monitored.

Modulate the subchannel 100% as read on the right meter.

Remove the jumper between the (HI-Z) terminal on the rear terminal board marked SCA audio.

MEASUREMENT OF DISTORTION OF THE SUBCHANNEL (Cont'd.)

Connect a distortion analyzer to the terminals marked "Ground" and "HI-Z".

Distortion may also be measured from the subchannel phone jack on the front panel.

The de-emphasis switch may be in either the 75 or 150μsecond position. Lower distortion reading will be measured in the 150μsecond position.

MEASUREMENT OF FM SIGNAL TO NOISE RATIO OF THE SUBCHANNEL:

Turn the subchannel selector switch to the desired subchannel being monitored.

Remove all modulation from the subchannel.

Turn the Xtalk-S/N Switch clockwise and read the FM-S/N on the right meter. (Refer to Operation of Crosstalk Signal to Noise Switch).

Return the Crosstalk Signal to Noise Switch to operate position.

NOTE: INTERNAL FM NOISE OF THE MONITOR MAY BE MEASURED BY SWITCHING THE SUBCHANNEL SELECTOR SWITCH TO THE CALIBRATE POSITION.

ADJUSTMENT OF SQUELCH OR "MUTE" CONTROL:

Turn the subchannel selector switch to the desired subchannel being monitored.

Reduce the SCA injection to approximately 5%.

Adjust the mute control on rear of chassis until the signal is "muted". Note setting and increase the control 1/8 to 1/4 turn in the direction which mutes the signal.

NOTE: IF INJECTION LEVELS ABOVE 15% ARE USED, SMOOTHER SQUELCH WOULD BE OBTAINED IF THE MUTE POINT IS INCREASED TO 10%.

NOTE: Our experience with SCA Receivers in the field has indicated that when 41KHz and 67KHz subchannels are being transmitted simultaneously, best results are obtained if 12% injection of the 41KHz subchannel (deviated ±4KHz) and 18% of the 67KHz subchannel (deviated ±6KHz) are used. This minimizes beat frequencies produced in the receivers.

MAINTENANCE

GENERAL:

If the TBM-4000A fails to function properly, first be sure that the RF input level is correct. Check to see if the unit performs properly in the Main Channel position. Check to see that all plug-in modules are securely seated in their sockets. Also check the mechanical meter zero. Be sure all transistors are in their sockets.

CALIBRATION:

The TBM-4000A has been properly calibrated at the factory and should not require internal calibration. However, if the unit should require calibration after a period of time, it is recommended that the unit be returned to the factory.

If proper test equipment is available, the following calibrations may be made:

CALIBRATION OF THE WIDE-BAND FM DEMODULATOR:

1. Remove the side plate from MM-606.

2. The frequency of the crystal is determined by the formula:

   $$\text{Crystal Frequency } X_f = \frac{\text{Operating Freq. (mHz)} + 1000 \text{ KHz}}{2}$$

3. Connect a VTVM to test point "A".

4. Tune the oscillator coil (L-1) for maximum voltage at test point "A". Reduce the voltage 10% on the slope side of the response curve.

5. Tune the doubler coil (L-2) for a null at test point "A".

6. Remove VTVM from test point "A".

7. The 1000 KHz output of the mixer may be viewed on an oscilloscope from test point "B".

8. A perfect sine wave should be viewed at test point "B". If not, retune doubler coil (L-2) for a clean sine wave.

CALIBRATION OF THE WIDE-BAND FM DEMODULATOR: (Cont'd.)

This is all the tuning required in the FM demodulator. The untuned IF's and counter detector are very wide-band and require no tuning. This results in no degradation of the transmitted signal. The unit will handle deviations in excess of ± 300 KHz with very low distortion.

MODULATION CALIBRATION OF WIDE-BAND DEMODULATOR:

For accurate calibration of the modulation, a good quality, stable communication receiver with BFO is required. The receiver must be tunable to 1000 KHz, also, a good low distortion audio generator is required.

1. Remove all modulation from the transmitter.

2. Tune the communication receiver to the IF frequency (1000 KHz). This signal is easily received by connecting the antenna to TP-B inside of the MM-606 case.

3. Adjust the BFO for a beat note of around 200-300 Hertz.

4. Connect an audio generator to the input of the transmitter, adjust the generator to 13,586 Hz. Accurate calibration depends on the accuracy of this audio frequency.

5. Increase the modulation of the transmitter slowly, until the first null is reached. Continue increasing modulation until a second null is reached. This is exactly 100% modulation or ± 75 KHz deviation.

NOTE: THE SIDE BANDS WILL PRODUCE NUMEROUS OTHER BEAT FREQUENCIES BETWEEN THE NULLS.

6. Adjust the level control (R-37) for exactly 1 volt peak to peak (0.35v RMS) output at test point "B". The accuracy of this voltage determines the accuracy of the monitor. 13,586 Hertz HAS BEEN CHOSEN BECAUSE THE SECOND NULL OR CARRIER DISAPPEARANCE IS EXACTLY 100% MODULATION. These nulls are very sharp. If you wish to use other frequencies to check other modulation percentages, use the following table:

TABLE OF AUDIO FREQUENCIES vs. PERCENTAGE OF MODULATION FOR VARIOUS NULLS

(Communication Receiver Tuned to 1000 KHz)

Null Number	Modulation Index	Frequency Deviation	Percentage of Modulation	Audio Frequency
2	5,520	75,000	100.0%	13,586
2	5,520	55,200	73.6%	10,000
2	5,520	27,600	36.8%	5,000
3	8,654	75,000	100.0%	8,670
3	8,654	86,550	115.4%	10,000
3	8,654	43,275	57.7%	5,000
4	11,792	75,000	100.0%	6,360
4	11,792	58,950	78.6%	5,000
4	11,792	23,550	31.4%	2,000
5	14,931	75,000	100.0%	5,023

MAIN CHANNEL AND SUBCHANNEL DC METER BALANCE:

DC BALANCE CALIBRATION, MM-604, MODULE #5 AND MODULE #16:

1. Short circuit the meter terminals and adjust the meter for mechanical zero.

2. Remove all input signal.

3. Adjust the balance controls (located on the top of the MM-604's) for exact zero meter readings.

NOTE: THE COMPOSITE INPUT JACK REFERRED TO IN THE CALIBRATION OF THE FOLLOWING FUNCTIONS IS THE INSIDE FRONT BANANA JACK MARKED COMPOSITE INPUT ON THE TOP OF THE CHASSIS.

CALIBRATION OF MODULATION METER: (TOTAL POSITION)

1. Turn the function switch to total modulation position.

2. Inject a (4oo Hz) signal, 1 volt peak to peak (0.35V RMS) into the composite input jack on the top of the chassis.

3. Adjust potentiometer R-5 for an exact reading of 100% on the left meter.

4. Frequencies from 50 Hz to 75,000 Hz should be checked for flat frequency response. The deviation should not exceed ± 0.2 Db.

NOTE: THE LEFT METER IN THE TOTAL POSITION MAY NOW BE USED FOR ALL REFERENCES.

CALIBRATION OF THE TOTAL PEAK FLASHER:

1. Inject a (400 Hz) signal until the left meter (total modulation position) reads exactly 100%.

2. Turn the peak indicator control to exactly 100%.

3. Adjust R-7 so that the light will just come on. Reducing the modulation 0.1 Db should turn the light off.

4. Decrease the input signal so that the left meter will read exactly 60%.

5. Set the peak indicator to exactly 60%.

6. If the light does not track at 60%, adjust R-17 until the light just comes on.

7. Again, check the tracking at 100%. Readjust R-7 for proper tracking, as the two controls interact on each other.

8. Repeat the above steps until perfect tracking is realized at all settings of the peak indicator.

CALIBRATION OF MAIN CHANNEL POSITION:

1. Turn function switch to main channel position.

2. Inject a 400 Hz signal 1 Volt peak to peak (0.35V RMS) into the composite input jack.

3. Adjust R-25 for a reading of exactly 100% on the left meter.

SUBCHANNEL INJECTION CALIBRATION:

1. Turn the subchannel selector switch to the No. 2 operate position.

2. Turn the function switch to the wide band injection position.

3. Inject the No. 2 selected subcarrier frequency ±10 Hz into the composite input jack at a level of (0.035V RMS). The accuracy of this voltage determines the accuracy of the calibration.

4. Switch SW-4, located on the top of the chassis, must be in 0-15% position.

5. Adjust the injection calibration potentiometer R-37 for exactly 10% injection reading on the lower injection scale of the left meter.

6. Turn the function switch to the narrow band injection position.

7. Adjust the equalizing potentiometer R-36, for exactly 10% injection reading on the lower injection scale of the left meter.

8. Turn the subchannel selector switch to No. 1 subchannel operate position.

9. Inject the No. 1 selected subcarrier frequency ±10 Hz into the composite input jack at a level of (0.035V RMS). The accuracy of this voltage determines the accuracy of the calibration.

10. Turn the function switch to wide band injection position.

SUBCHANNEL INJECTION CALIBRATION (Cont'd.)

11. Adjust the equalizing potentiometer R-33 for exactly 10% injection reading on the lower injection scale of the left meter.

12. Turn the function switch to the narrow band position.

13. Adjust the equalizing potentiometer R-34 for exactly 10% injection reading on the lower injection scale of the left meter.

14. The overall calibration can be verified by switching the main function switch to the total position. 10% (within ±2%) should be indicated on the top scale of the left meter.

CALIBRATION OF THE SQUELCH CONTROL:

1. Turn the subchannel selector switch to desired subchannel.

2. Place the function switch in one of the injection positions.

3. Inject the subchannel to the desired level as read on the lower injection scale on the left meter.

4. Reduce the subchannel injection to one-half of the normal operating level.

5. Adjust the squelch control until the audio is just muted. Note the position and increase 1/8 turn in the same direction.

NOTE: THE SQUELCH MAY BE ADJUSTED TO A LOW LEVEL; HOWEVER, THE SQUELCH MAY NOT BE AS SMOOTH.

CALIBRATION OF FM-S/N METER:

1. Turn function switch to FM-S/N position.

2. Inject a 400 Hz signal 1 volt peak to peak (0.35V RMS) into the composite input jack located on top of the chassis.

CALIBRATION OF FM-S/N METER (Cont'd.)

3. Adjust potentiometer R-26 for a reading of exactly 100% on the right meter. NOTE: BOTH LEFT AND RIGHT METERS SHOULD NOW READ 100%.

4. Turn function switch to either total or main channel position to verify calibration. Left meter should read 100% modulation in either position.

CALIBRATION OF AM-S/N METER:

1. Remove internal RF shield.

2. Bridge the two capacitors which are located under the RF shield, with external 2 mfd capacitors.

3. Turn the function switch to RF input level position.

4. Inject (60 Hz) signal into the RF input jack until the RF indicates exactly 100% reading on the left meter.

5. Measure the exact voltage required to give this 100% reading on the meter.

6. Remove external capacitors from circuit.

7. Inject this measured voltage into the high side of AM-S/N potentiometer (R-6).

8. Turn function switch to AM-S/N position.

9. Adjust potentiometer for a reading of exactly 100% as read on the right meter.

10. Replace internal RF shield.

CALIBRATION OF THE CENTERING OF THE FREQUENCY METER:

1. Turn the subchannel selector switch to the No. 2 calibrate position.

2. Place the front panel meter zero control (R-48) in the mid-position.

3. The internal oscillator output must read 15% on the injection scale with the function switch in either injection position.

CALIBRATION OF THE CENTERING OF THE FREQUENCY METER: (Cont'd.)

4. Adjust frequency centering potentiometer R-43 for exactly a zero center meter reading.

5. Rotating the front panel meter zero control to the left should move the frequency meter reading to the left and vice versa.

6. The same procedure is used in the calibration of the No. 1 channel. Potentiometer R-41 is used for centering the frequency meter.

CALIBRATION OF THE NO. 1 and NO. 2 REFERENCE (CRYSTAL OSCILLATORS):

1. Insert the No. 1 reference crystal into the proper socket.

2. The subchannel selector switch must be in the No. 1 subchannel calibration position.

3. Connect an oscilloscope to the top side of the potentiometer R-62.

4. Adjust L-1 for maximum oscillation as viewed on the scope. Reduce the output at least 10% on the slope side. Switch the subchannel selector switch to operate position and back again several times to insure stable operation of the crystal oscillator.

5. Turn the function switch to either injection position.

6. Adjust No. 1 crystal output potentiometer R-62 for an injection reading of 15% as read on the lower injection scale of the left meter. (With the subchannel selector switch in the #1 calibrate position the meter will read the output of the crystal oscillator).

7. The same procedure is used in the calibration of the No. 2 crystal oscillator. Potentiometer R-63 is used for adjusting the injection level.

CALIBRATION OF THE DEVIATION OF THE FREQUENCY METER:

NOTE: A FREQUENCY COUNTER MUST BE USED FOR THIS OPERATION.

1. Turn the subchannel selector switch to the No. 2 calibrate position.

CALIBRATION OF THE DEVIATION OF THE FREQUENCY METER (Cont'd.)

2. Turn the function switch to either of the two injection positions to monitor the injection level.

3. Center the frequency meter for zero center with the front panel frequency meter control.

4. Connect a frequency counter to the output (Pin #6) of Module #9 (MM-617). This amplified subcarrier is of sufficient amplitude to drive a frequency counter.

5. Inject an RF signal of the desired subchannel frequency into the composite input jack with a level of (0.025V RMS).

6. The frequency counter should now read the correct carrier frequency within ±25 Hz.

7. Switch the subchannel selector switch to the No. 2 operate position.

8. Adjust the external RF generator for zero center reading on the frequency meter. The frequency counter again should read the correct carrier frequency within ±25 Hz.

9. Increase the external RF signal 2 KHz as verified by the frequency counter.

10. Adjust the frequency meter deviation potentiometer R-46 for a reading of +2 KHz on the frequency meter.

11. Repeat steps 5 through 10, as slight interaction will be noted in the front panel frequency meter zero control.

12. Lower the RF signal 2 KHz and verify accuracy on the lower side.

13. The calibration of the No. 1 channel is identical. Potentiometer R-45 controls the deviation sensitivity of the No. 1 channel.

SUBCHANNEL MODULATION CALIBRATION:

The Bessel Function Method can be used for accurate calibration of the subchannel modulation deviation. An extremely narrow band communication receiver with BFO is required. The subchannel carriers used are so low in frequencies that very

few receivers are capable of receiving them. One method that can be used is to heterodyne the signal to a higher frequency. Another problem is that the IF's used in the average receivers are too wide and the carrier nulls are very difficult to distinguish.

Another simpler method can be used utilizing a frequency counter, signal generator, and a good oscilloscope.

Example: Using a 67KHz carrier

1. Connect a 67KHz signal generator (unmodulated) to the input of the TBM-4000A.

2. Turn the function switch to one of the injection positions and adjust the level of the 67KHz signal for a reading of 15% injection as read on the lower scale of the modulation meter.

3. Connect an oscilloscope to the output of the 67KHz signal generator and adjust the scope for a display of one or two cycles. The amplitude of the generator must be kept constant at all times.

4. Connect a frequency counter and verify that the frequency is 67KHz.

5. Shift the generator frequency exactly +6KHz or for a frequency counter reading of 73KHz.

6. Note carefully the sine wave displacement on the scope as this represents plus 6KHz deviation of the carrier.

7. Shift the generator frequency exactly -6KHz or for a frequency counter reading of 61KHz.

8. Again note carefully the sine wave displacement on the scope as this represents minus 6KHz deviation of the carrier.

9. These two excursions plus and minus 6KHz should be marked very carefully on the face of the scope.

10. Connect an SCA generator to the input of the monitor. The level must be adjusted to give exactly a 15% injection reading on the modulation meter.

SUBCHANNEL MODULATION CALIBRATION (Cont'd.)

11. Connect the scope to the output of the SCA generator.

12. Turn the deviation switch to the ±6KHz operate position.

13. Slowly increase the modulation (400 Hz) of the generator until the ribbon is exactly the same width as the + and -6KHz marker placed on the scope. This represents a carrier deviated ±6KHz.

14. Adjust Modulation Calibration Potentiometer R-53 for a reading of exactly 100%, as read on the modulation meter scale.

NOTE: IF CARE IS USED, THIS PROCEDURE IS ACCURATE WITHIN AT LEAST ±5OHz AS COMPARED WITH THE PRECISE BESSEL FUNCTION METHOD.

CALIBRATION OF THE PEAK FLASHER:

1. Turn the deviation switch to the ±6KHz operate position.

2. Inject a (400Hz) signal into the composite input jack until the modulation meter reads exactly 100%.

3. Turn the peak indicator control to exactly 100% modulation.

4. Adjust R-91 so that the peak light will just come on. Reducing the modulation 0.1 Db should turn the light off.

NOTE: THE PEAK FLASHER WILL REMAIN ON FOR A PERIOD OF 2 TO 4 SECONDS.

5. Set the peak flasher to exactly 60%.

6. Decrease the input signal so that the total modulation meter reads exactly 60%.

7. If the light does not track at 60%, adjust R-93 until the light just comes on.

8. Again, check the tracking at 100%. Readjust R-91 for proper tracking, as the two controls interact on each other.

9. Repeat the above steps until good tracking is realized at all settings of the peak indicator.

TROUBLE SHOOTING

1. Refer to schematic diagram for voltage reading.

2. Check the B^+ voltage at the output of the buss which is fed from voltage regulator transistor Q-9. This voltage should be plus 90v (± 1%).

3. Check the B^+ voltage at each leg in the power supply. The voltage should be within ±10% of the voltage on the schematic.

4. If the voltage differs considerably from the correct voltage, this would indicate a defective module.

5. If a plug-in module is found to be defective, it is recommended that it be returned to the factory for repair or replacement. Spare plug-in modules may be purchased from MC MARTIN INDUSTRIES, INCORPORATED, Omaha, Nebraska.

   CAUTION: When replacing modules in the field, the calibration must be rechecked.

TBM-4000A PARTS LIST

SYMBOL	MC MARTIN STOCK NO.	DESCRIPTION
C1	Part of a 60A-27	Capacitor, 200 Mfd @ 150 Volt
C2	Part of a 60A-1	Capacitor, 100 Mfd @ 150 Volt
C3	63B-3	Capacitor, 1 Mfd @ 200 Volt Tubular
C4	60-34	Capacitor, 32 Mfd @ 64 Volt Tubular
C5	-	Capacitor, 320 Mfd @ 64 Volt Tubular
C6	Part of a 60A-27	Capacitor, 150 Mfd @ 150 Volt
C6A	60-2	Capacitor, 40 Mfd @ 150 Volt Tubular
C7	60-34	Capacitor, 32 Mfd @ 64 Volt Tubular
C8	63B-3	Capacitor, 1 Mfd @ 200 Volt Tubular
C9	63B-10	Capacitor, 0.1 Mfd @ 200 Volt Tubular
C10	63-30	Capacitor, .04 Mfd ±10% 400 Volt Tubular
C10A	65-9	Capacitor,*3000 Pfd ±5% 500 Volt D.M.
C11	60-9	Capacitor, 160 Mfd @ 25 Volt Tubular
C12	60-20	Capacitor, 400 Mfd @ 40 Volt Tubular
C13	63B-3	Capacitor, 1 Mfd @ 200 Volt Tubular
C14	Part of a 60A-1	Capacitor, 80 Mfd @ 200 Volt
C15	65-48	Capacitor, 7500 Pf ±5% 500 Volts D.M.
C16	65-11	Capacitor, 270 Pf ±5% 500 Volts D.M.
C17	60-34	Capacitor, 32 Mfd @ 64 Volt Tubular
C18	63B-3	Capacitor, 1 Mfd @ 200 Volt Tubular
C19	60-20	Capacitor, 400 Mfd @ 40 Volt Tubular
C20	65-17	Capacitor,*910 Pf ±5% 500 Volts D.M.
C21	63B-9	Capacitor, .068 Mfd @ 200 Volt Tubular
C22	60-10	Capacitor, 10 Mfd @ 25 Volt Tubular
C23	63B-10	Capacitor, 0.1 Mfd @ 200 Volt Tubular
C24	Part of a 60A-1	Capacitor, 100 Mfd @ 150 Volt
C25	63B-10	Capacitor, 0.1 Mfd @ 200 Volt Tubular
C26	63B-10	Capacitor, 0.1 Mfd @ 200 Volt Tubular
C27	Part of a 60A-1	Capacitor, 40 Mfd @ 150 Volt
C28	60-20	Capacitor, 400 Mfd @ 40 Volt Tubular
C29	65-38	Capacitor, 1500 Pf ±5% 500 Volts D.M.
C30	Part of a 60A-1	Capacitor, 60 Mfd @ 150 Volt
C31	60-33	Capacitor, 5 Mfd @ 64 Volt Tubular
*C32	65-17	Capacitor, 910 Pf ±5% 500 Volts D.M.
C33	Part of a 60A-1	Capacitor, 60 Mfd @ 150 Volt
*C34	-	Capacitor, 15,000 Pf Tubular
C35	65-48	Capacitor, 7500 Pf ±5% 500 Volts D.M.
C36	65-48	Capacitor, *7500 Pf ±5% 500 Volts D.M.
C37	60-34	Capacitor, 32 Mfd @ 64 Volt Tubular
C38	Part of a 60A-27	Capacitor, 150 Mfd @ 150 Volt
C39	-	Capacitor, 820 Pf ±5% 500 Volts D.M.
C40	65-15	Capacitor, 1000 Pf ±5% 500 Volts D.M.
C41	63B-9	Capacitor, .068 Mfd @ 200 Volts Tubular
C42	65-22	Capacitor, 100 Pf ±5% 500 Volts D.M.
C43	-	Capacitor, 2700 Pf ±5% 500 Volts D.M.
C44	-	Capacitor, 820 Pf ±5% 500 Volts D.M.
C45	63B-9	Capacitor, .068 Mfd @ 200 Volts Tubular

SYMBOL	MC MARTIN STOCK NO.	DESCRIPTION
C46	65-22	Capacitor, 100 Pf ±5% 500 Volts D.M.
C47	65-37	Capacitor, 3600 Pf ±5% 500 Volts D.M.
C48	65-22	Capacitor, 100 Pf ±5% 500 Volts D.M.
C49	Part of a 60A-1	Capacitor, 80 Mfd @ 200 Volt
C50	-	Capacitor, 4700 Pf Tubular
C51	-	Capacitor, 10,000 Pf Tubular
C52	-	Capacitor, 10,000 Pf Tubular
C53	Part of a 60A-27	Capacitor, 150 Mfd @ 150 Volt
C54	63B-10	Capacitor, .1 Mfd @ 200 Volts Tubular
C55	63B-3	Capacitor, 1 Mfd @ 200 Volts Tubular
C56	60-33	Capacitor, 5 Mfd @ 64 Volts Tubular
C57	60-20	Capacitor, 400 Mfd @ 40 Volt Tubular
C58	Part of a 60A-1	Capacitor, 40 Mfd @ 150 Volt
C59	60-34	Capacitor, 32 Mfd @ 64 Volts Tubular
C60A	-	Capacitor, *3300 Pf ±5% 500 Volts D.M.
C60B	63-30	Capacitor, .04 Mfd 400 Volt Tubular
C61	63B-10	Capacitor, .1 Mfd 200 Volt Tubular
C62	63B-3	Capacitor, 1 Mfd 200 Volt Tubular
C63	-	Capacitor, 320 Mfd @ 6.4 Volt
C64	-	Capacitor, 320 Mfd @ 6.4 Volt
C65	60-9	Capacitor, 160 Mfd @ 25 Volt
C66	63B-3	Capacitor, 1 Mfd @ 200 Volt
C67	60-20	Capacitor, 400 Mfd @ 40 Volt
C68A	Part of a 60A-27	Capacitor, 200 Mfd @ 150 Volt
C68B	Part of a 60A-27	Capacitor, 150 Mfd @ 150 Volt
C69	64-11	Capacitor, .02 Mfd ±20% 500 Volt Disc
C70	64-11	Capacitor, .02 Mfd ±20% 500 Volt Disc

*Nominal Value

SYMBOL	MC MARTIN STOCK NO.	DESCRIPTION
R1	50B-106	Resistor, 5.6K ohm 5% ½ Watt
R2	42-13	Control, 1K ohm ±10% 2 Watt
R3	54-21	Resistor, 4750 ohm ±1% ½ Watt
R4	50B-96	Resistor, 2.2K ohm ±5% ½ Watt
R5	42-3	Control, 5K ohm ±10% 2 Watt
R6	42-7	Control, 50K ohm ±10% 2 Watt
R7	42-7	Control, 50K ohm ±10% 2 Watt
R8	54-23	Resistor, 68.1K ohm ±1% ½ Watt
R9	50B-128	Resistor, 47K ohm ±5% ½ Watt
*R10	50B-158	Resistor, 820K ohm ±5% ½ Watt
R11	50B-117	Resistor, 16K ohm ±5% ½ Watt
R12	50B-102	Resistor, 3.9K ohm ±5% ½ Watt
R12A	50B-120	Resistor, 22K ohm ±5% ½ Watt
R13	50B-178	Resistor, 5.6 Meg ohm ±5% ½ Watt
R14	50B-176	Resistor, 4.7 Meg ohm ±5% ½ Watt
*R15	50B-164	Resistor, 1.5 Meg ohm ±5% ½ Watt
R16	51A-18	Resistor, 470 ohm ±10% 1 Watt
R17	42-10	Control, 10K ohm ±10% 2 Watt
R18	42-13	Control, 1K ohm ±10% 2 Watt
R19A	54-15	Resistor, 316.2 ohm ±.25% ½ Watt
R19B	54-15	Resistor, 316.2 ohm ±.25% ½ Watt
R20	54-1	Resistor, 10K ohm ±1% ½ Watt
R21A	50B-56	Resistor, 47 ohm ±1% ½ Watt
R21B	50B-62	Resistor, 82 ohm ±1% ½ Watt
R22	54-12	Resistor, 12.1K ohm ±1% ½ Watt
R23	50B-120	Resistor, 22K ohm ±5% ½ Watt
R24	50B-104	Resistor, 4.7K ohm ±5% ½ Watt
R25	42-10	Control, 10K ohm ±10% 2 Watt
R26	42-10	Control, 10K ohm ±10% 2 Watt
R27	50B-114	Resistor, 12K ohm ±5% ½ Watt
R28	50B-172	Resistor, 3.3 Meg ohm ±5% ½ Watt
R28A	50B-104	Resistor, 4.7K ohm ±5% ½ Watt
R29	50B-84	Resistor, 680 ohm ±5% ½ Watt
R30	50B-84	Resistor, 680 ohm ±5% ½ Watt
R31	50B-84	Resistor, 680 ohm ±5% ½ Watt
R33	42-13	Control, 1K ohm ±10% 2 Watt
R34	42-13	Control, 1K ohm ±10% 2 Watt
R35A	50B-86	Resistor, 820 ohm ±5% ½ Watt
R35B	50B-70	Resistor, 180 ohm ±5% ½ Watt
R36	42-13	Control, 1K ohm ±10% 2 Watt
R37	42-7	Control, 50K ohm ±10% 2 Watt
R38A	54-20	Resistor, 1820 ohm ±1% ½ Watt
R38B	54-20	Resistor, 1820 ohm ±1% ½ Watt
R39	50B-100	Resistor, 3.3K ohm ±5% ½ Watt
R40	50B-112	Resistor, 10K ohm ±5% ½ Watt
R41	42-10	Control, 10K ohm ±10% 2 Watt
R42	54-12	Resistor, 12.1K ohm ±1% ½ Watt
R43	42-10	Control, 10K ohm ±10% 2 Watt

SYMBOL	MC MARTIN STOCK NO.	DESCRIPTION
R44	54-10	Resistor, 7.5K ohm ±1% ½ Watt
R45	42-10	Control, 10K ohm ±10% 2 Watt
R46	42-10	Control, 10K ohm ±10% 2 Watt
R47	50B-104	Resistor, 4.7K ohm ±5% ½ Watt
R48	42-13	Control, 1K ohm ±10% 2 Watt
R49	50B-84	Resistor, 680 ohm ±5% ½ Watt
R50	50B-88	Resistor, 1K ohm ±5% ½ Watt
R51	50B-112	Resistor, 10K ohm ±5% ½ Watt
*R52	50B-114	Resistor, 12K ohm ±5% ½ Watt
R53	42-4	Control, 2.5K ohm ±10% 2 Watt
R54	50B-112	Resistor, 10K ohm ±5% ½ Watt
R55	54-12	Resistor, 12.1K ohm ±1% ½ Watt
R56	50B-120	Resistor, 22K ohm ±5% ½ Watt
R57	52B-1	Resistor, 15K ohm ±5% 2 Watt
R58	50B-158	Resistor, 820K ohm ±5% ½ Watt
*R59	50B-120	Resistor, 22K ohm ±5% ½ Watt
R60	50B-158	Resistor, 820K ohm ±5% ½ Watt
*R61	50B-126	Resistor, 39K ohm ±5% ½ Watt
R-62	42-7	Control, 50K ohm ±5% ½ Watt
R-63	42-7	Control, 50K ohm ±5% ½ Watt
R-64	50B-86	Resistor, 820 ohm ±5% ½ Watt
R-65	50B-70	Resistor, 180 ohm ±5% ½ Watt
R-66	50B-86	Resistor, 820 ohm ±5% ½ Watt
R-67	50B-70	Resistor, 180 ohm ±5% ½ Watt
R-68	54-1	Resistor, 10K ohm ±1% Metal Film ½ Watt
R-69	-	Resistor, 34K ohm ±1% Metal Film ½ Watt
R-70	54-21	Resistor, 4.75K ohm ±1% Metal Film ½ Watt
R-71	50B-168	Resistor, 2.2 Meg ohm ±5% ½ Watt
R-72	42-7	Control, 50K ohm ±10% 2 Watt
R-73	50B-80	Resistor, 470 ohm ±5% ½ Watt
R-74	50B-112	Resistor, 10K ohm ±5% ½ Watt
R-75	50B-112	Resistor, 10K ohm ±5% ½ Watt
R-76	50B-116	Resistor, 15K ohm ±5% ½ Watt
R-77	50B-100	Resistor, 3.3K ohm ±5% ½ Watt
R-78	50B-124	Resistor, 33K ohm ±5% ½ Watt
R-79	50B-168	Resistor, 2.2 Meg ohm ±5% ½ Watt
R-80	50B-100	Resistor, 3.3K ohm ±5% ½ Watt
R-81	50B-84	Resistor, 680 ohm ±5% ½ Watt
R-82	50B-120	Resistor, 22K ohm ±5% ½ Watt
R-83	50B-104	Resistor, 4.7K ohm ±5% ½ Watt
R-84	50B-96	Resistor, 2.2K ohm ±5% ½ Watt
R-85	50B-112	Resistor, 10 K ohm ±5% ½ Watt
R-86	50B-134	Resistor, 82K ohm ±5% ½ Watt
*R-87	50B-172	Resistor, 3.3 Meg ohm ±5% ½ Watt
R-88	50B-160	Resistor, 1 Meg ohm ±5% ½ Watt
R89A	50B-102	Resistor, 3900 ohm ±5% ½ Watt
R89B	50B-120	Resistor, 22K ohm ±5% ½ Watt
R90	50B-176	Resistor, 4.7 Meg ohm ±5% ½ Watt
R91	42-10	Control, 10K ohm ±10% 2 Watt
*R-92	50B-164	Resistor, 1.5 Meg ohm ±5% ½ Watt

SYMBOL	MC MARTIN STOCK NO.	DESCRIPTION
R-93	42-10	Control, 10K ohm ±10% 2 Watt
R-94	42-13	Control, 1K ohm ±10% 2 Watt
R-95	51A-18	Resistor, 470 ohm ±10% 1 Watt
R-96A	54-15	Resistor, 316.2 ohm ±.25% Metal Film ½ W
R-96B	54-15	Resistor, 316.2 ohm ±.25% Metal Film ½ W
R-97A	50B-56	Resistor, 47 Ohm ±5% ½ Watt
R-97B	50B-62	Resistor, 82 Ohm ±5% ½ Watt
R-98	53E-3	Resistor, 750 ohm ±10% 10 Watt [illegible]
R-99	53C-21	Resistor, 7K ohm ±10% 40 Watt V.E. Tubu[illegible]
R-100	53E-3	Resistor, 750 ohm ±10% 10 Watt V.E. Tubu[illegible]
R-101	53C-21	Resistor, 7K ohm ±10% 5 Watt V.E. Tubu[illegible]
R-102	52B-1	Resistor, 15K ohm ±5% 2 Watt
R-103	52B-7	Resistor, 10K ohm ±5% 2 Watt
R-104	52B-12	Resistor, 3.3K ohm ±5% 2 Watt
R-105	-	Resistor, 1.5K ohm ±10% 5 Watt V.E. Tubul
R-106	52B-12	Resistor, 3.3K ohm ±5% 2 Watt
R-107	52B-8	Resistor, 33K ohm ±5% 2 Watt
R-108	52B-7	Resistor, 10K ohm ±5% 2 Watt
R-109	52B-5	Resistor, 5.6K ohm ±5% 2 Watt
R-110	52B-8	Resistor, 33K ohm ±5% 2 Watt
R-111	52B-2	Resistor, 4.7K ohm ±5% 2 Watt
R-112	52B-13	Resistor, 1.5K ohm ±5% 2 Watt
R-113	53E-3	Resistor, 750 ohm ±10% 10 Watt V.E. Tubul
R-114	52B-7	Resistor, 10K ohm ±5% 2 Watt
R-115	52B-12	Resistor, 3.3K ohm ±5 2 Watt
R-116	52B-8	Resistor, 33K ohm±5% 2 Watt
R-117	-	Resistor, 2.7K ohm ±5% 2 Watt
R-118	52B-12	Resistor, 3.3K ohm ±5% 2 Watt
R-119 - DELETED		
R-120A	54-3	Resistor, 100 ohm ±1% ½ Watt
R-120B	54-4	Resistor, 216.2 ohm ±1% ½ Watt
R-120C	54-5	Resistor, 683.8 ohm ±1% ½ Watt
R-120D	54-6	Resistor, 2.162K ohm ±1% ½ Watt
R-120E	54-7	Resistor, 6,838K ohm ±1% ½ Watt
R-120F	54-8	Resistor, 21.62K ohm ±1% ½ Watt
T1	90-24	Transformer, Power
T2	91-3	Transformer, Output #308G
T3	91-3	Transformer, Output #308G
FL1	Dual No. 1 Channel B.P.F.	
FL2	Dual No. 2 Channel B.P.F.	
FL3	7.5 Kc L.P.F.	
FL4	15 Kc L.P.F.	
L1	Calibration Oscillator Coil	
L2	Calibration Oscillator Coil	

*Nominal Value

TBM-4000A PARTS LIST

SYMBOL	MC MARTIN STOCK NO.	DESCRIPTION
Z1	22-7	Zener Diode, 13V
Z2	22-8	Zener Diode, 36V
Z3	22-11	Zener Diode, 24V
Z4	22-11	Zener Diode, 24V
Z5	22-11	Zener Diode, 24V
Z6	22-11	Zener Diode, 24V
Z7	22-8	Zener Diode, 36V
Z8	22-8	Zener Diode, 36V
Z9	22-10	Zener Diode, 90V
F1	28-1	Fuse, ½ Amp/125V Slo-Blo
Mod. 1	MM-606	FM Demodulator
Mod. 2	MM-608	Phase Splitter
Mod. 3	MM-614	Composite Amp
Mod. 4	MM-603	Amplifier
Mod. 5	MM-604	DC Amplifier
Mod. 6	MM-607	Peak Flasher Amp
Mod. 7	MM-603	Audio Amplifier
Mod. 8	MM-601A	Dual Composite Amp.
Mod. 9	MM-617	Injection Amplifier
Mod.10	MM-610	Demodulator
Mod.11	MM-614	Audio Amp.
Mod.12	MM-614	Audio Amp.
Mod.13	MM-603	Audio Amp.
Mod.14	MM-603	Audio Amp.
Mod.15	MM-609	Meter Amp.
Mod.16	MM-604	DC Meter Amp.
Mod.17	MM-615	Squelch Amp.
Mod.18	MM-607	Peak Amplifier
SW-1	492003	Modulation Polarity Switch
SW-2	491003	Function Switch
SW-3	491005	Sub-channel Selector Switch
SW-4	480004	Injection Calibration Switch
SW-5	491003	Crosstalk S/N Switch
SW-6		
SW-7	492003	Sub Channel Deviation Switch
SW-8	480006	Sub Channel De-emphasis Switch
SW-9	480006	Main Channel De-emphasis Switch
SW-10	480001	AC On/Off Switch

WARRANTY

McMARTIN Broadcast and Audio Products are warranted to be free from defects in workmanship -- FOREVER.

At our discretion, we will exchange or repair any defective unit or components, at any time, without charge. Material and components are guaranteed for a minimum period of ninety days from the date of original purchase. Transportation charges must be prepaid on equipment returned for warranty service.

This warranty does not extend to any of our products which have been subjected to misuse, neglect, accidents, incorrect wiring not our own, improper installation, or to use in violation of the instructions furnished by us; nor to units that have been altered outside our factory.

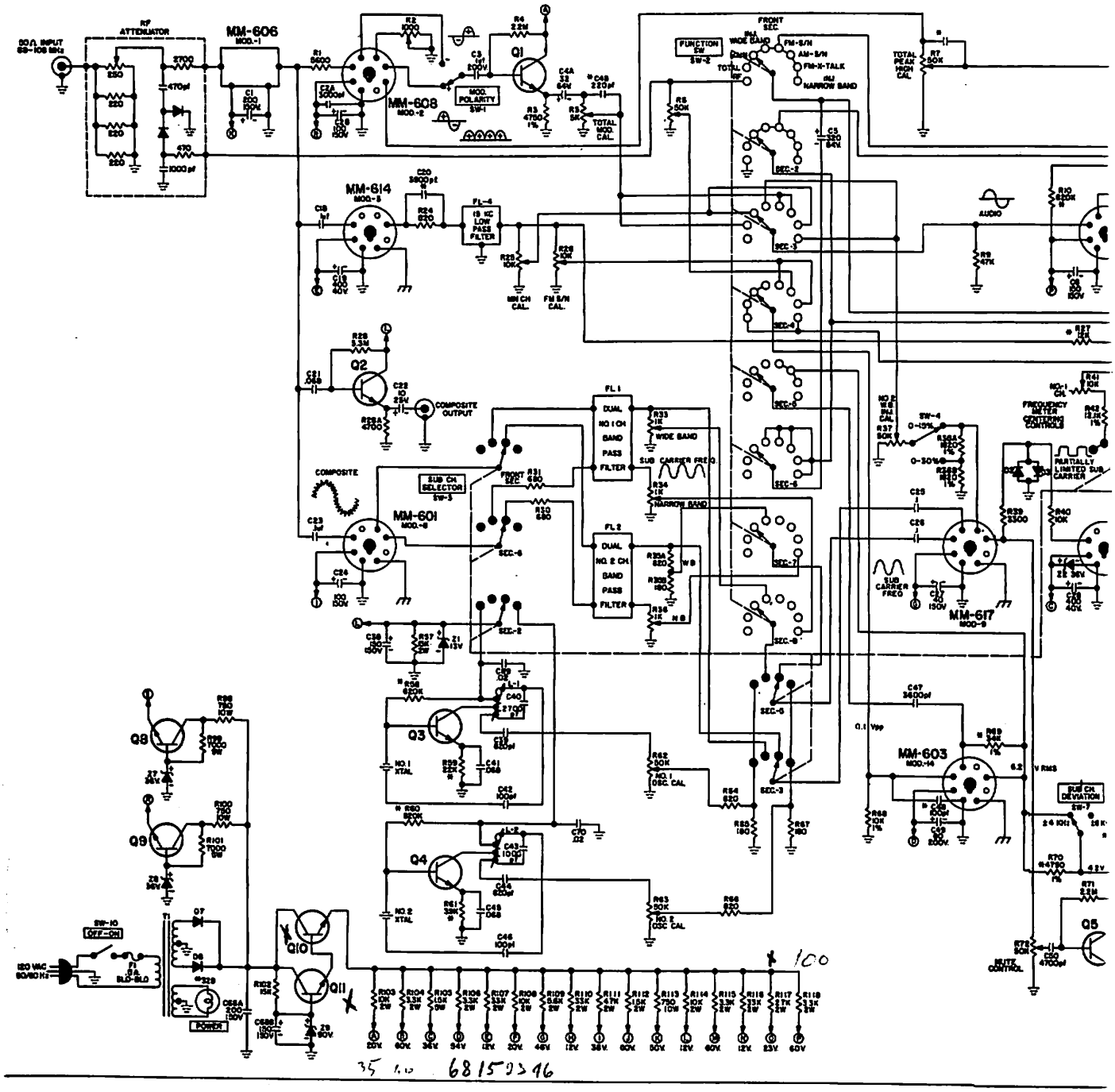

35 100 6815 0346

Bill Theisen

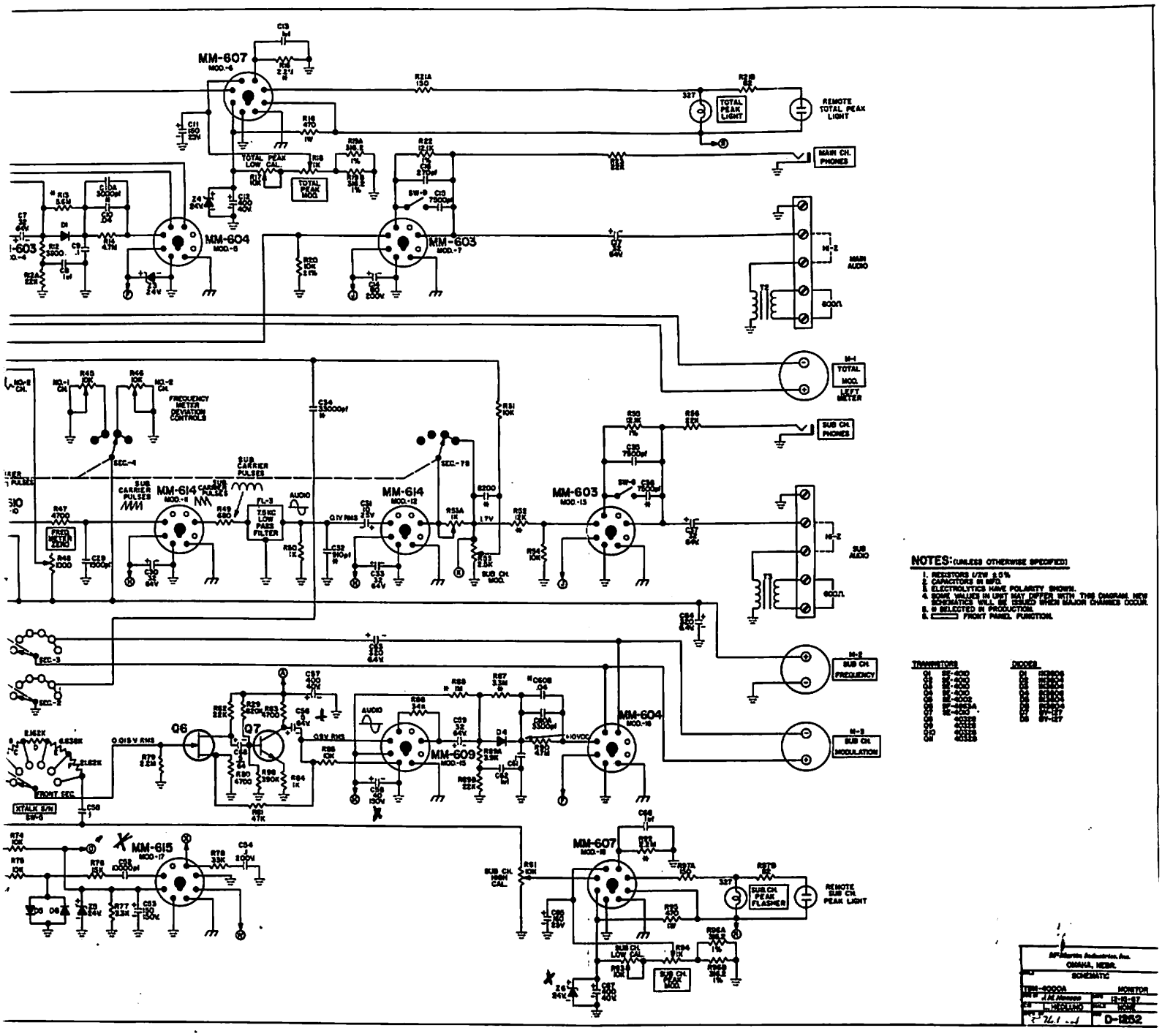

DWG. A-1172
ES-10236

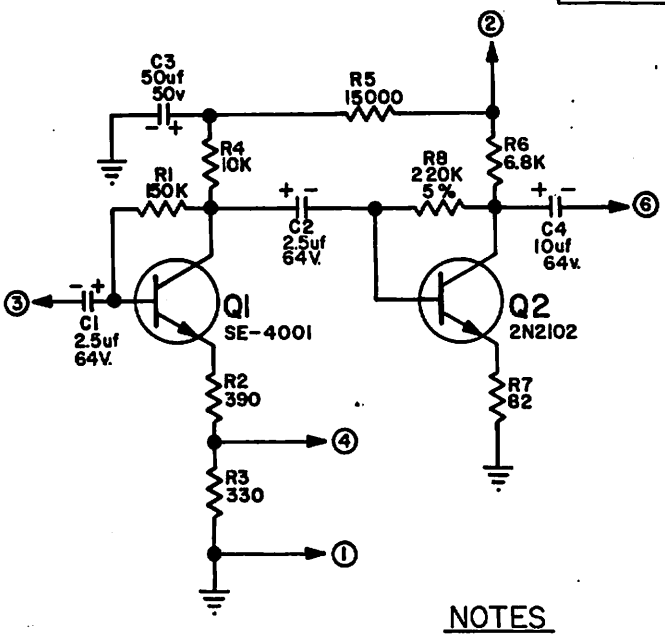

NOTES
ALL RESISTORS 5%

PIN CONNECTIONS
1. SIG. GND.
2. B+ 60V.
3. INPUT
4. FEED-BACK
5. ——
6. OUTPUT
7. ——
8. SHIELD

MM-603

McMartin Industries, Inc.
OMAHA, NEBR.
TITLE SCHEMATIC, PLUG-IN AUDIO AMPLIFIER
DWN BY J. Hagen — DATE 6-2-66
ENG HEDLUND — SCALE NONE
APP'D BY L. Hedlund — DWG. A-1172

DWG. A-1649

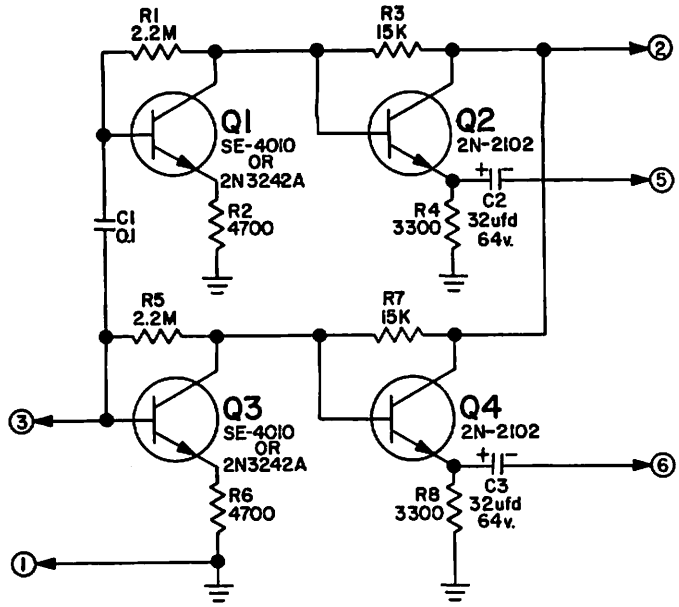

PIN CONNECTIONS
1. SIGNAL GND.
2. B+ 35v.
3. INPUT
4. ——
5. OUTPUT
6. OUTPUT
7. ——
8. SHIELD

ALL RESISTORS 5%

MM-601

McMartin Industries, Inc.
OMAHA, NEBR.
TITLE SCHEMATIC, PLUG-IN COMPOSITE AMP.
DWN BY J. Hagen — DATE 11-30-66
ENG HEDLUND — SCALE NONE
APP'D BY L. Hedlund — DWG. A-1649

A-1396
ES-10236

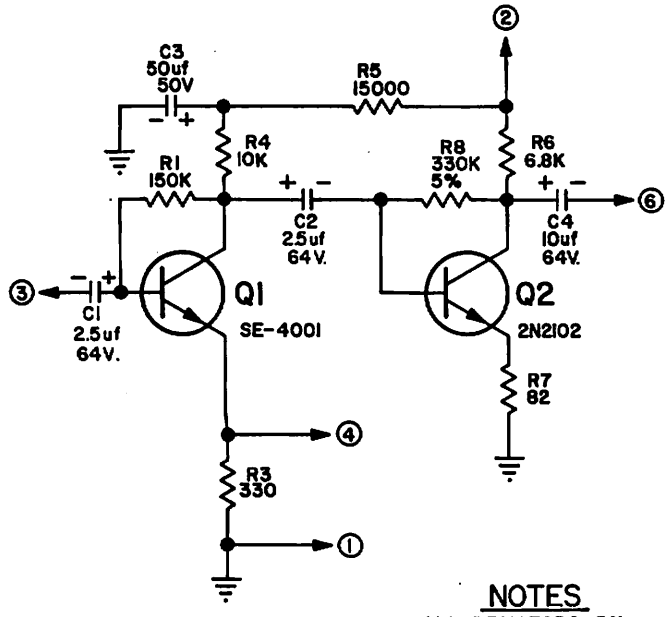

NOTES
ALL RESISTORS 5%

PIN CONNECTIONS
1. SIG. GND.
2. B+ 60V
3. INPUT
4. FEED-BACK
5. ——
6. OUTPUT
7. ——
8. SHIELD

MM-609

McMartin Industries, Inc.
OMAHA, NEBR.
TITLE SCHEMATIC, PLUG-IN AUDIO-DB AMPLIFIER
DWN BY Hedlund — DATE 6-2-66
ENG HEDLUND — SCALE NONE
APP'D BY L. Hedlund — DWG. A-1396

DWG A-1180
ES-10241

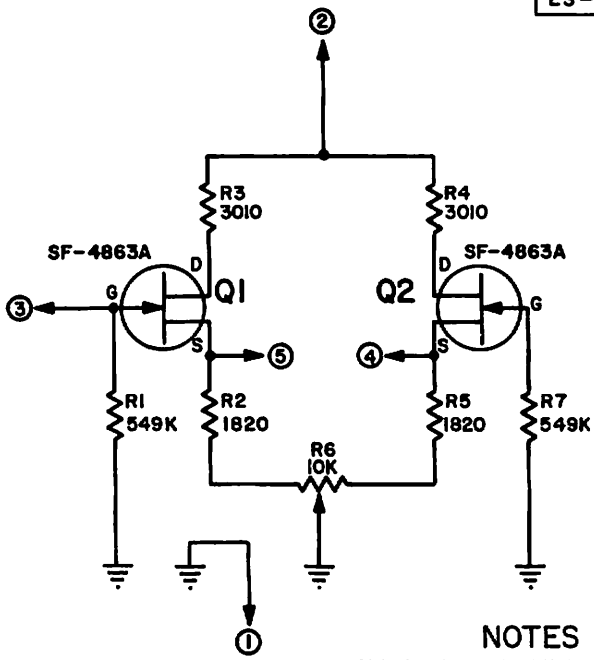

NOTES
ALL RESISTORS METAL FILM 1%

PIN CONNECTIONS
1. SIG. GND.
2. B+ 24V.
3. INPUT
4. METER
5. METER
6. ——
7. ——
8. SHIELD

MM-60

McMartin Industries, Inc.
OMAHA, NEBR.
TITLE SCHEMATIC, PLUG-IN D.C. METER AMP.
DWN BY J. Hagen — DATE 6-2-66
ENG HEDLUND — SCALE NONE
APP'D BY L. Hedlund — DWG A-1180

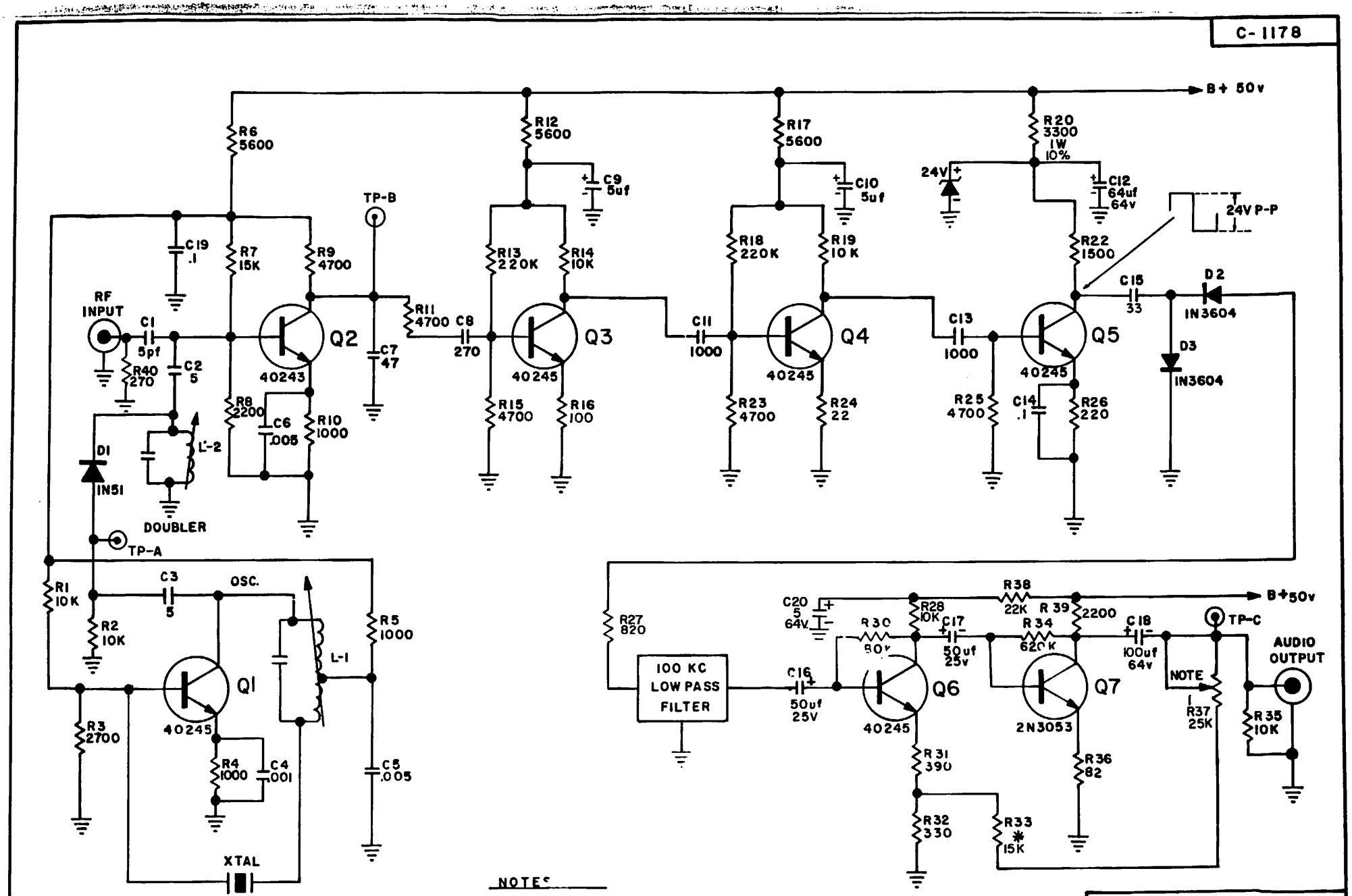

NOTES

ALL RESISTERS 1/2W ± 5%

1. ADJUST EXACTLY FOR 0.35 V R.M.S. WITH ± 75KC DEVIATION

McMARTIN INDUSTRIES INC. OMAHA, NEBR.	
SCHEMATIC MM-606 PLUG IN WIDE BAND (88-108) FM DEMOD.	
DWN. BY PLATZ	11-22-65
HEDLUND	NO SCALE
APP'D. L. Hedlund	C-1178

B-1262

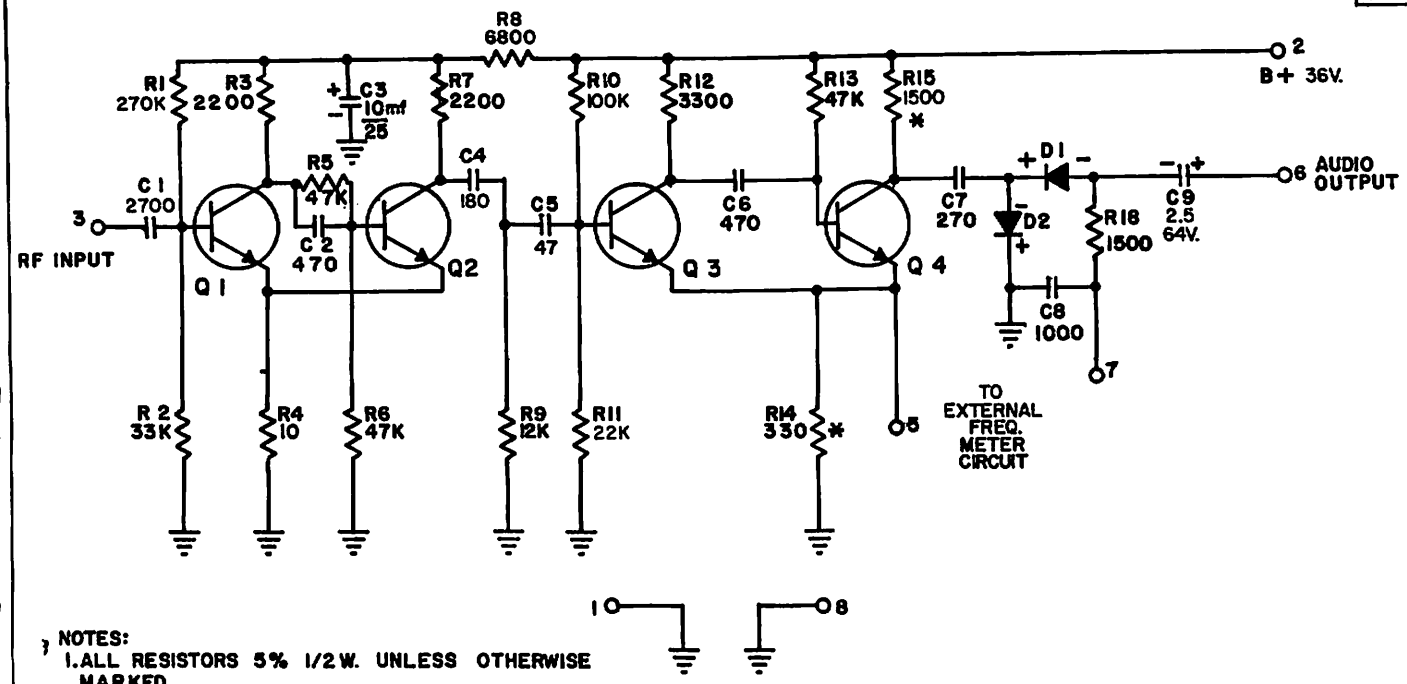

NOTES:
1. ALL RESISTORS 5% 1/2W. UNLESS OTHERWISE MARKED
2. * 1% 1/2 W.
3. Q1-SE-4010
Q2-SE-4010
Q3-SE-4001
Q4-2N2102

1		1418	11-11-68	
CH. NO.	MADE BY / CHK. BY	E.O. NO.	DATE	

McMartin Industries, Inc.
OMAHA NEBR.

TITLE SCHEMATIC
RF AMPLIFIER LIMITER (MM-610

DWN		DATE	3-11-66
ENG.	HEDLUND	SCALE	NONE
			B-1262

DWG. B-1222

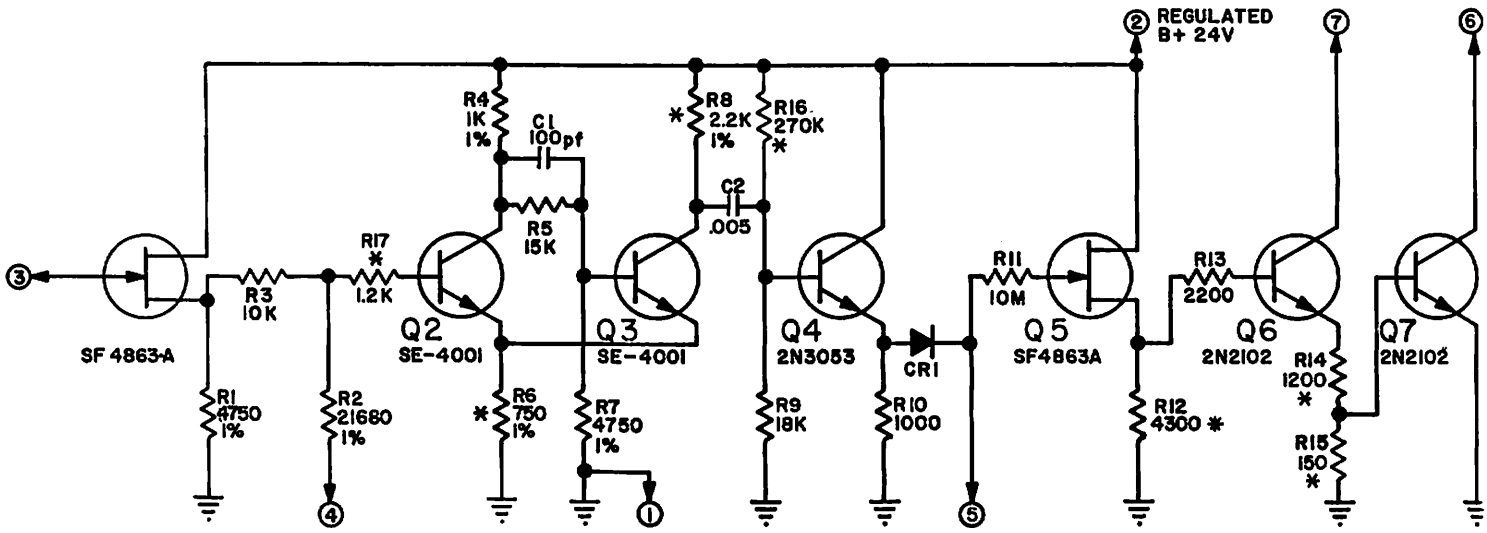

PIN CONNECTIONS
1. SIG. GND.
2. B+ 24 REG.
3. AUDIO INPUT
4. DC BIAS VOLTAGE
5. RC TIME CONSTANT
6. PEAK LAMP
7. B+ 36V
8.

NOTES
* VALUES SELECTED IN PRODUCTION
ALL RESISTORS 5% UNLESS OTHERWISE INDICATED.

MM-6C

1	67-9-332	9-13-67	
		E.O.	DATE

McMartin Industries, Inc.
OMAHA, NEBR.

TITLE SCHEMATIC, PEAK FLASHE

DWN BY		DATE	7-20-66
ENG.	HEDLUND	SCALE	NONE
APP'D. BY		DWG	B-1222

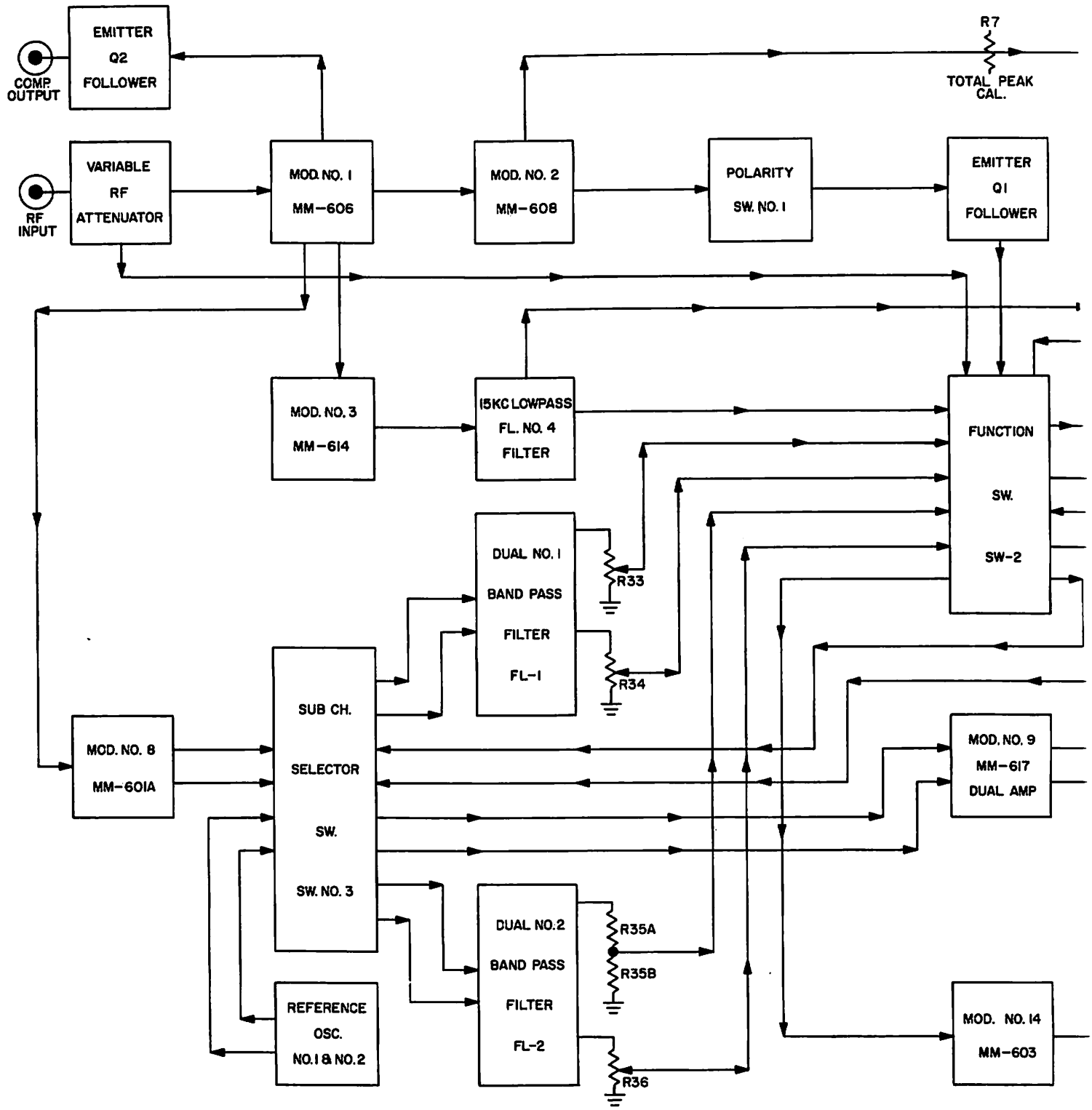
COMP. OUTPUT
EMITTER Q2 FOLLOWER
R7
TOTAL PEAK CAL.
RF INPUT
VARIABLE RF ATTENUATOR
MOD. NO. 1 MM-606
MOD. NO. 2 MM-608
POLARITY SW. NO. 1
EMITTER Q1 FOLLOWER
MOD. NO. 3 MM-614
15KC LOWPASS FL. NO. 4 FILTER
FUNCTION SW. SW-2
DUAL NO. 1 BAND PASS FILTER FL-1
R33
R34
MOD. NO. 8 MM-601A
SUB CH. SELECTOR SW. SW. NO. 3
MOD. NO. 9 MM-617 DUAL AMP
DUAL NO. 2 BAND PASS FILTER FL-2
R35A
R35B
R36
REFERENCE OSC. NO. 1 & NO. 2
MOD. NO. 14 MM-603

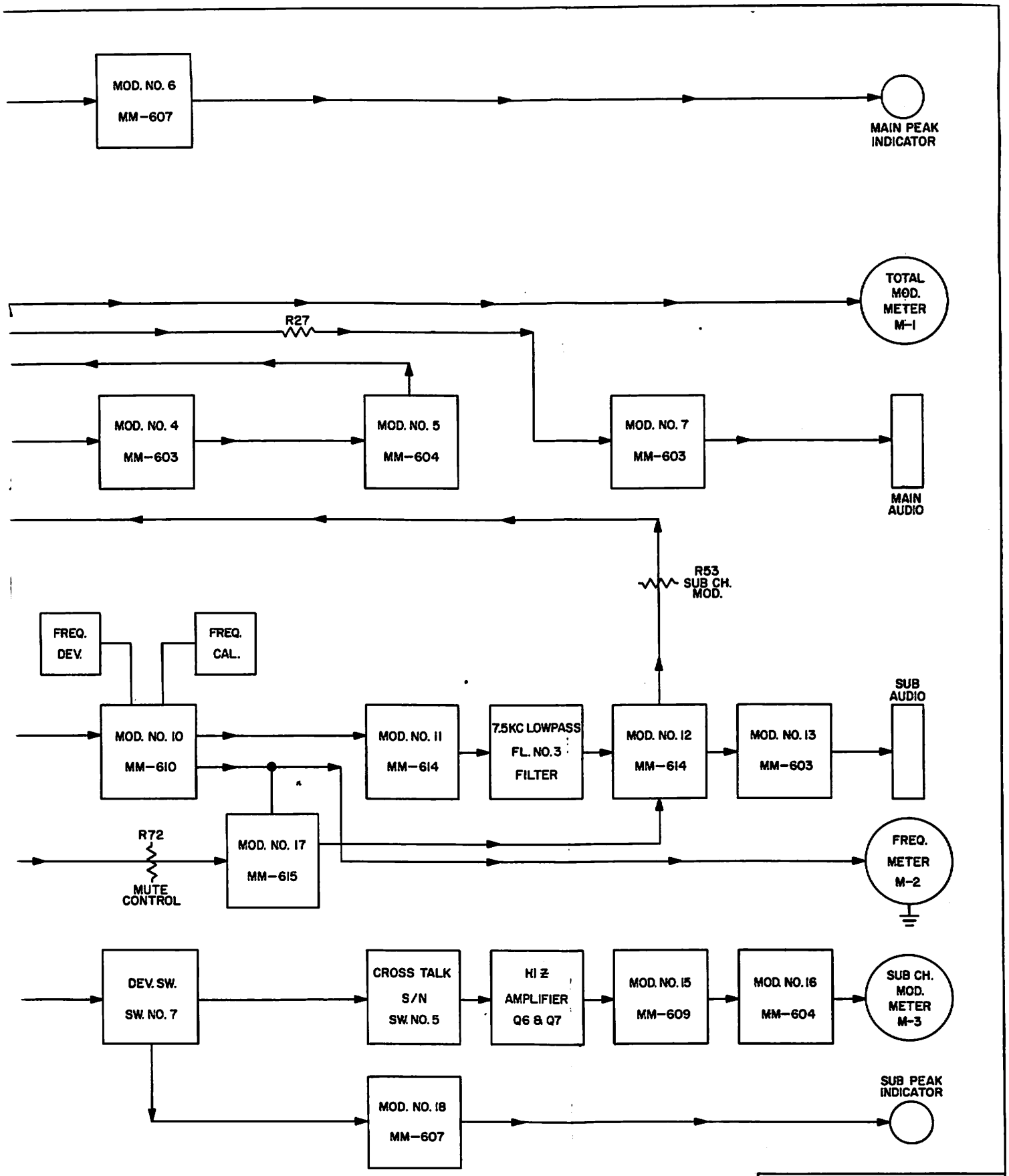

McMartin Industries, Inc. OMAHA, NEBR.	
TITLE BLOCK DIAGRAM TBM-4000A MONITOR	
DWN BY J.M.Hansen	DATE 2-19-68
ENG L. HEDLUND	SCALE NONE
APP'D BY L. Hedlund	DWG D-1216