RERUN
OCTOBER 1963

INSTRUCTION BOOK

FOR

MODEL 120-E

FIELD STRENGTH METER

Vitro ELECTRONICS
A DIVISION OF VITRO CORPORATION OF AMERICA
919 JESUP-BLAIR DRIVE • SILVER SPRING, MARYLAND

PRODUCERS OF NEMS CLARKE EQUIPMENT

TABLE OF CONTENTS

Description	Page
Specifications for 120-E Field Strength Meter	1
Tube Complement and Metering Crystals	1
Introduction	2
Description	2
Theory of Operation	3
1. Signal Input	5
2. RF Amplifier	5
3. First detector and oscillator	5
4. IF attenuator	5
5. First IF amplifier	5
6. Second IF amplifier	6
7. Third IF amplifier	6
8. Crystal rectifier	6
9. Calibrating oscillator	6
10. Switching system	6
Installation	6
1. Battery Installation	7
2. Use of external power supply	7
3. Use of recording equipment	7
Operation	7
1. Checking battery voltages	7
2. Meter Calibration	8
3. Measuring signal strength	8
4. Operating procedure summary	9
5. Use of LOG-LIN switch	9
6. Turning off equipment	9
Maintenance	9
1. Tube replacement	9
2. Crystal replacement	10
3. Alignment Procedures	11
a. Normal Field Realignment	11
b. Complete IF alignment	11
c. IF Adjustment	11
d. Complete receiver local oscillator realignment	12
e. Complete RF and Loop alignment	12
f. Complete Calibrating Oscillator Adjustment	12

4. Linearity 12
5. Attenuators 12
6. Removal of chassis from case 13
7. Friction clutch on receiver and calibrating oscillator control knobs 13
Parts List 17

LIST OF ILLUSTRATIONS

Figure No. Title Page
1. Field Strength Meter, 120-E Front Cover Open iv
2. Block Diagram, Field Strength Meter 4
3. Field Strength Meter, Rear View, Battery Compartment Open 14
4. Field Strength Meter Chassis, Top Oblique View 15
5. Field Strength Meter Chassis, Bottom Oblique View 16
6. Schematic Diagram, Field Strength Meter 23

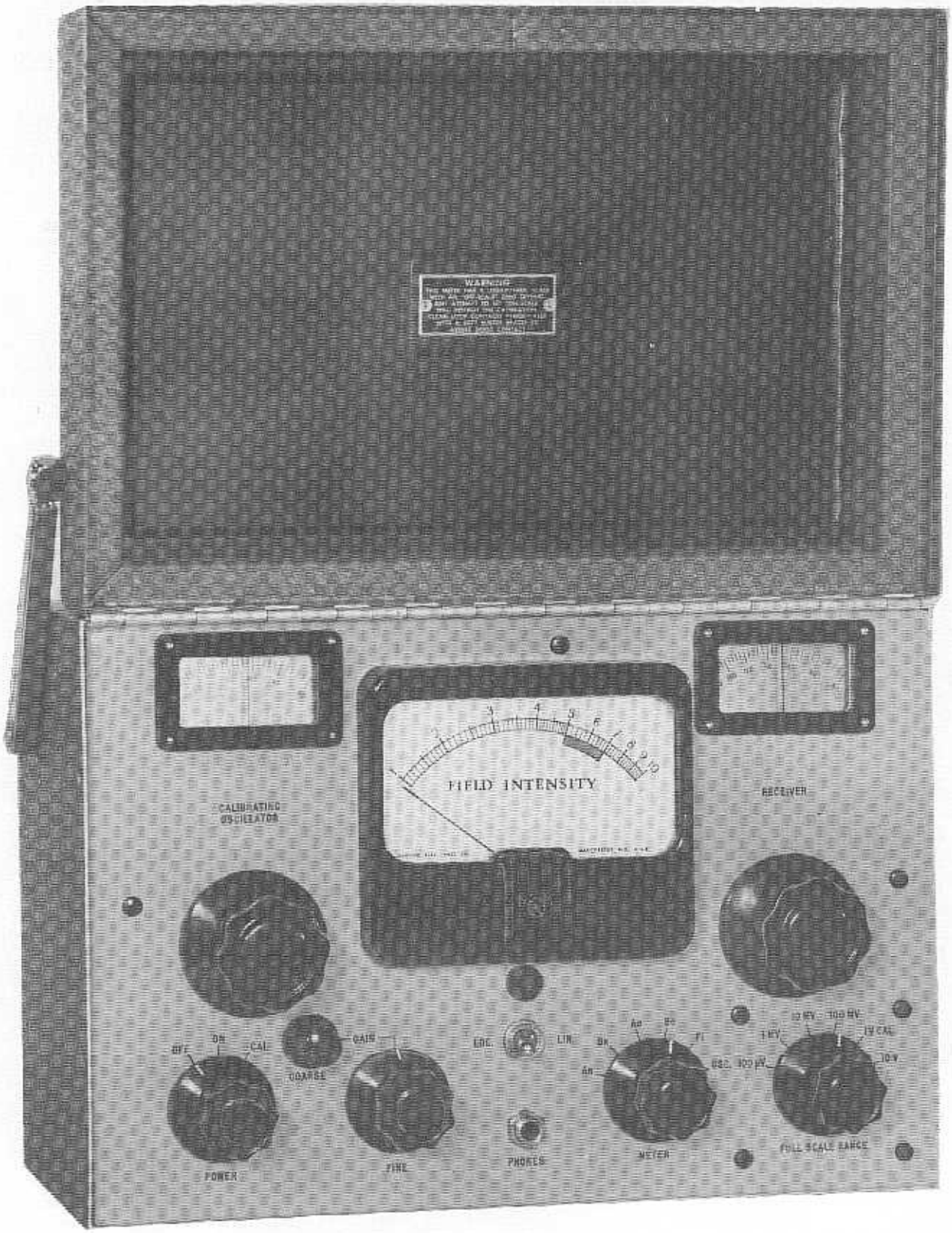

Figure 1. Field Strength Meter, 120-E, Front Cover Open

SPECIFICATIONS FOR 120-E FIELD STRENGTH METER	
Frequency Range	540 to 1600 kc
Field Strength range	10 microvolts per meter to 10 volts per meter
Accuracy of attenuators	2%
Output indicator	Panel meter, direct reading, with logarithmic scale graduated 1 to 10 and HAVING NO ZERO MARK (needle is OFF SCALE when meter is not energized). Provision for using recorder. Headphones high-impedance (not supplied).
Antenna	Shielded, unbalanced loop
Power Supply	Batteries, five-1-1/2-volt, two-67-1/2 volt. Provision for external power supply. (Batteries not supplied).
Battery Life	500 indications (approx.)
Mechanical specifications	
Overall dimensions, closed	Height 9", width 13", depth 5-3/4"
Weight, including batteries	12-1/2 lbs.

TUBE COMPLEMENT		
Symbol	Type	Function
VT-1	1T4	RF Amplifier
VT-2	1R5	First detector and heterodyne oscillator
VT-3	1T4	IF Amplifier
VT-4	1T4	IF Amplifier
VT-5	1T4	IF Amplifier
VT-6	1R5	Calibrating oscillator
METERING CRYSTALS		
X-1	1N38A	Calibrating oscillator output
X-2	1N38A	Receiver signal output

Introduction

The Model 120-E Field Strength Meter is a compact, light-weight portable instrument for the measurement of a wide range of radio signal intensities in the radio-broadcast band from 540 to 1600 kilocycles. Its range of sensitivity, from 10 microvolts per meter to 10 volts per meter, makes it equally effective for interference studies at low signal strength and for close-in measurements on high-power directional arrays.

Because of the high selectivity considered necessary in a modern field strength meter, the overall bandwidth of the 120-E does not exceed 7 kc at 1000 kc, with one-half voltage response. Image response is approximately 80 db down at all frequencies, and I.F. rejection is approximately 80 db down at all frequencies above 600 kc and 70 db at 540 kc.

Accuracy of measurement is assured by a calibration method that compensates for variations in tube characteristics and for voltage variations in the self-contained battery power supply. The meter is direct reading at all ranges and requires the use of no charts or multiplication factors, making for simple operation and rapid reading of measurements. Since the tubes are of the direct-heating filament type, no warm-up period is necessary before taking readings.

The added feature of providing both linear and logarithmic indications permits the use of the unit with recording equipment for continuous observations. An external amplifier, not supplied, is required to drive a recorder. Provisions are made for the use of an external power supply when conditions require continual operation.

A 10,000 to 25,000 ohm telephone headset is recommended as an aid in identifying signals under observation, and may be used at the same time readings are being made.

Description

The 120-E Field Strength Meter is assembled in a metal case, finished in crackle gray with satin French gray panel. A convenient carrying handle is provided on the narrow side of the case. This may be permanently extended if desired. The hinged cover is recessed to accommodate the loop aerial and is held closed during transportation by spring-loaded, telescoping chrome braces on the side of the case. When the cover is raised, the braces swing up and support the cover and loop in a vertical position above the panel. The cabinet should be held firmly when opening the cover.

The rear compartment cover of the case is hinged for replacing batteries.

A 1/4 x 20 threaded hole on the bottom face of the instrument case is provided to mount the meter on a tripod or unipod, if desired, for convenient operation. No tripod is available with the equipment. Any reasonably sturdy camera tripod may be used; a unipod may be preferable for its swivelling capability.

The panel of the instrument is fitted with the following indicators and controls; for which panel designations and function are included:

The Indicating Scale Meter itself is equipped with a 200-micro-ampere movement, indicating field strength directly on a logarithmically-graduated 1-to-10 face. This scale has no zero position; the pointer rests to the left of the first graduation with no current reading. Full-scale deflection for the highest range setting is 10 V/M. The meter indicates correctly, regardless of whether or not the carrier is modulated, provided the modulation is symmetrical.

Receiver Tuning Control Knob: The driving dial is visible through a rectangular transparent panel opening. The scale is calibrated directly in the frequencies desired, 54 to 160, corresponding to 540 to 1600 kilocycles.

Calibrating Oscillator Tuning Control Knob: For calibrating oscillator circuits, driving a dial similar to the receiver tuning dial and calibrated in the same manner.

Power Switch: Equipped with three positions as follows:

OFF: Power off (all circuits).

ON: Power on (receiver only).

CAL: Power on (receiver and calibrating oscillator).

Volume Control Potentiometers: Coarse and fine for adjusting the receiver gain for calibration purposes.

Meter Switch: Six-position for checking battery voltages and field-strength/calibration values as follows:

AR- Receiver filament (A) voltage.

BR- Receiver plate (B) voltage.

AC- Calibrating oscillator filament (A) voltage.

BC- Calibrating oscillator plate (B) voltage.

FI- Field Intensity, at range set by FULL SCALE RANGE switch.

OSC- Output voltage of calibrating oscillator.

Full Range Scale Switch: Six-position for adjusting receiver circuit attenuation and provide full-scale meter deflection as follows:

100 μV, 1 MV, 10 MV, 100 MV, 1 V, 10 V.

LOG-LIN Switch: To provide either logarithmic or linear output of the receiver; the former primarily for use when the meter is to operate a DC amplifier in connection with recording equipment.

Phone Jack: For high-impedance telephone headset when required.

Recording: An unmarked pin jack located below the indicating meter is for connection to a DC recording amplifier.

Theory of Operation

The Field Strength Meter circuit is shown in the schematic diagram at the back of the book; the theory of operation is described below in the sequence shown by the block diagram, Figure 2.

The circuit components are carefully shielded to prevent stray couplings between the circuits, particularly between oscillator and receiver, which will cause distorted calibration.

The receiver proper consists of a five-tube superheterodyne receiver comprising one stage of permeability tuned radio frequency amplification before the mixer, plus three permeability-tuned intermediate frequency stages. Attenuation circuits for a wide range of sensitivites are inserted at two points as shown in the schematic. The output of the calibrating oscillator is also metered through a crystal. The harmonic content of this oscillator has been kept low by careful design. The receiver section, with the meter in the output, is first tuned to the signal to be measured. The incoming signal is then reduced to a minimum by rotating the instrument and loop. The calibrating oscillator is switched on and the strength of this signal injected into the loop is measured on the meter. The meter is again switched to the output of the receiver, and the gain of the receiver is adjusted to give a meter reading exactly equivalent to the calibrator oscillator input to the loop. The receiver output is then calibrated to a known input at the frequency on which it is to be used.

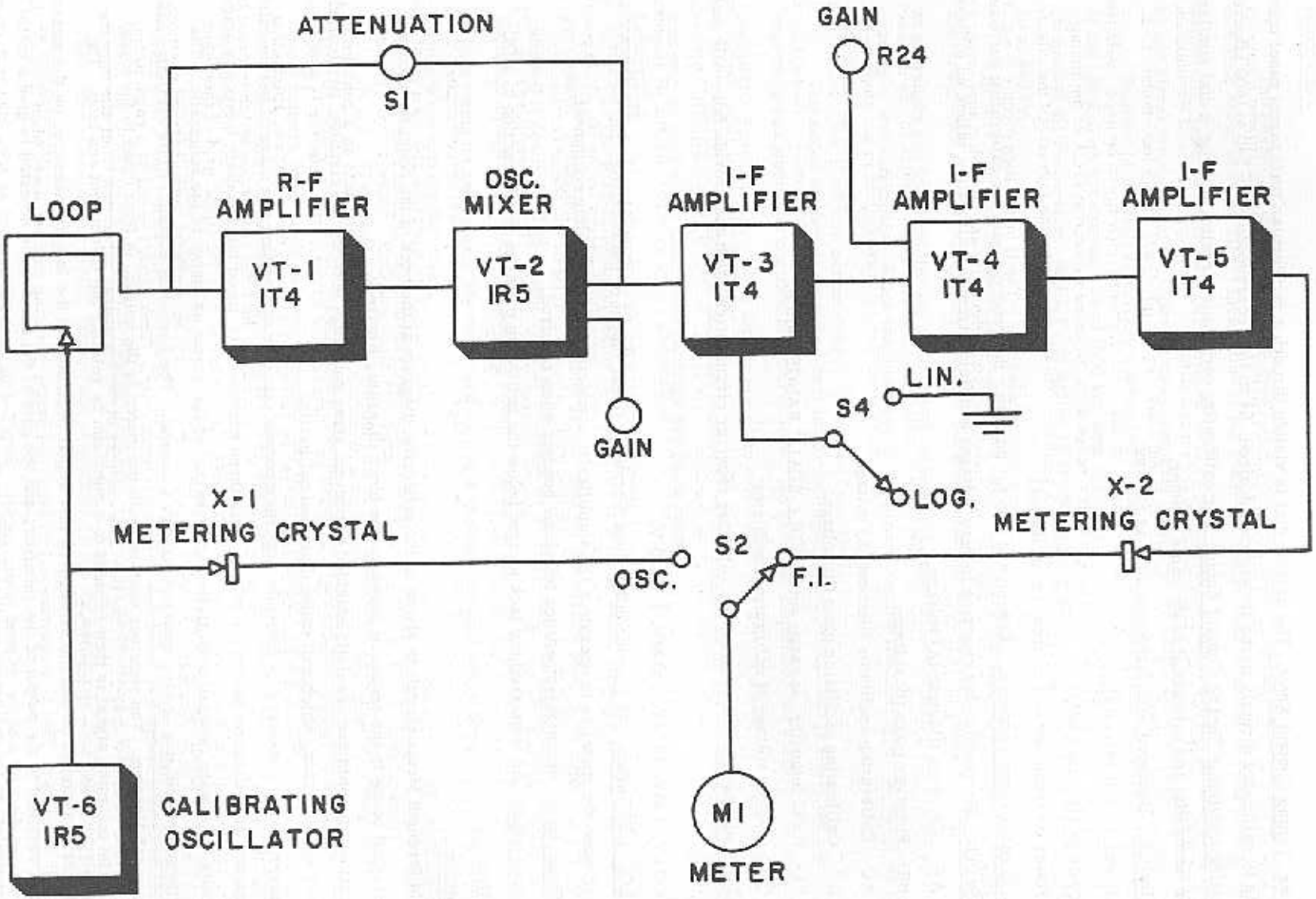

Figure 2. Block Diagram, Field Strength Meter

The field strength is then read by switching off the calibrating oscillator and rotating the instrument's loop for an accurate reading.

1. Signal Input: Refer to the schematic diagram for circuit details. The loop, L-1, is of the unbalanced, shielded type, with one end connected to L-3, and the high end loaded by a high-Q adjustable inductance, L-2. The loop has only a few turns, so its fundamental frequency is above the highest frequency to be used. Additional inductance is provided by L-2 to give a wide enough tuning range when adjusted by section C-2A of the tuning capacitor which is operated by the front panel RECEIVER control. This form of antenna minimizes the effects of distributed capacities, reduces antenna effect, and requires no balancing. The Q of the loop circuit is about 100 at one megacycle. This high-Q factor makes for high sensitivity and selectivity and provides high image rejection through the use of an RF amplifier stage.

2. R.F. Amplifier: The loop is connected through a conventional capacity divider which forms one section of the RF attenuator system to the RF amplifier, VT-1. The attenuator circuit is controlled in six steps by sections S-1A, 1B and 1C of the FULL SCALE RANGE switch, and works in conjunction with an IF attenuator controlled by section S-1D of this same switch. Together these attenuators provide six steps of receiver output voltage, each progression providing ten times the receiver output of a preceding value.

The attenuator is arranged so that reduction takes place first in the input to the IF amplifier. On the 100 μV/M position, the 1 MV/M position, and the 10 MV/M position of the FULL SCALE RANGE switch the RF attenuator is out of the circuit. On the 100 MV/M position, the 1 V/M position and the 10 V/M position the IF attenuator is maintained at full attenuation, and loss is introduced progressively in the RF attenuator. With this arrangement noise originating in the front-end circuits has no effect on output meter indications except on the 100 μV/M position. Even on this position its effect is negligible and does not materially affect the accuracy of the indication.

Provision is made in the attenuator to avoid detuning of preceding circuitry. The RF amplifier tube, VT-1, operates with a fixed bias derived from the resistor network R-22, R-23, and R-24.

3. First Detector and Oscillator: The output of the RF stage is coupled to the first detector tube, VT-2, by a transformer, T-1. This same tube, through its associated transformer, T-6, operates also as a local heterodyning oscillator. Transformers T-1 and T-6 are tuned by capacitors C-2B and C-2C respectively. These capacitors are ganged with each other and with the loop tuning capacitor, C-2A. The tube acts as a conventional oscillator-mixer to develop an intermediate frequency of 455 kc. Linearity of output of this detector is good, since the range of signal inputs over which it functions is reduced by the fact that there are three steps of attenuation in the input to the RF amplifier, VT-1. The output circuit of VT-2 contains the fixed inductance which is tuned by C-20 to resonance at the intermediate frequency. The COARSE GAIN control is in the signal grid of this stage.

4. IF Attenuator: The IF Attenuator circuit functions on the 100-μV/M, 1 MV/M, and 10 MV/M positions of the FULL SCALE RANGE switch S-1 (positions of greatest sensitivity). This circuit is fed by a capacitance voltage divider formed by C-21 and C-22. This prevents changes in the attenuator capacities from affecting the tuning of the choke L-12 in the first IF amplifier.

5. First IF Amplifier: This is a conventional IF amplifier stage operating on fixed bias, when the LOG-LIN toggle switch S-4 is in the LIN position to feed linear output. With S-4 in the LOG position an AVC bias is derived from the DC output of the metering crystal, X-2, which varies the gain in VT-3.

The output of the tube is then in approximate logarithmic proportion to the input.

6. Second IF Amplifier: This stage (VT-4) is the conventional type of IF amplification. It has an adjustable control, R-24, operated by the GAIN knob on the panel. This adjusts the overall gain of the receiver during the calibration procedure previously discussed.

7. Third IF Amplifier: This is a straight IF stage with no AVC or gain control, maintaining maximum output at all times to the crystal rectifier circuit.

8. Crystal Rectifier: The output of the third IF stage is coupled to the crystal circuit. Using a crystal rather than a thermionic rectifier neutralizes battery variations. The crystal circuit is so constituted that it also eliminates temperature variations. The rectified output of the crystal X-2 is fed directly to the meter through R-20. The crystal output is also capacity-coupled to the "PHONES" jack, J-1, on the front panel. A high-impedance head-set may be used to identify the signals being checked.

9. Calibrating Oscillator: The oscillator tube, VT-6, is operated on a separate set of batteries. The circuit is of the inductive feedback type. The metering crystal, X-1, is connected across the grid and cathode of the tube and prevents the grid from going positive at any time. The grid circuit is tuned by C-57, which is coupled to the CALIBRATING OSCILLATOR control on the panel.

The tuned circuit of the oscillator is designed with a high-Q factor. The output of the oscillator is taken off the grid through a high resistance (R-33 and R-35). This produces minimum loading on the circuit, and the output waveform is practically free of harmonics.

After passing through R-33 and R-35, the oscillator output is divided into two paths:

(1) An RF path through C-54, injecting the RF voltage into the loop circuit.

(2) A DC path to ground through R-26, R-27 and R-28. The rectifying action of the crystal, X-1, provides the DC component of the output and a tap on R-27 feeds the measuring voltage to the panel meter, M-1, when the METER switch, S-2, is set on OSC. Since the oscillator output is relatively free from harmonics, the meter reading is a true indication of peak voltage of the fundamental oscillator frequency.

10. Switching System: In addition to the FULL SCALE RANGE switch, S-1, two other switching circuits are employed:

(a) METER switch S-2 connects the meter, M-1, to the output of the receiver, or of the calibrating oscillator as desired. Four other positions of the switch connect the meter through a suitable multiplier network to permit reading of the four sets of batteries used in the instrument.

(b) POWER switch S-3 controls the voltage to the tubes: All tube filaments are off in the OFF position of the switch. The receiver circuits are on in the ON position. Both receiver and calibrating oscillator are on in the CAL position. A microswitch, S-5, is included in the receiver circuit to cut off the filaments when the cover of the meter is closed. However, S-3 must be placed in the OFF position to switch off the calibrator tube.

Installation: The Model 120-E is shipped with all tubes installed, less batteries. Upon receipt of the instrument remove it carefully from its packing material and examine for damage that may have occurred during shipment. Lay the instrument on its back and check the cover to see that it opens freely and the telescoping braces function satisfactorily. Examine panel and check all controls for free movement. Do not force any control that may be tight or frozen.

1. Battery Installation: Secure five 1.5-volt heavy-duty flashlight cells and two 67.5 volt "B" batteries of any of the types listed below:

Quant.	Voltage	Type Numbers			Dimensions (inches)		
		RCA	Eveready	Burgess	Height	Width	Length
5	1.5	VS001	950	2	2-3/8	1-1/4 ←	(diameter)
2	67.5	VS016	467	XX45	3-11/16	15/16	2-11/16

With reference to Figure 3, the filament and plate batteries may be installed as follows:

(a) FILAMENT: Open the battery compartment lid on the rear of the instrument by releasing the two winged fasteners and swing the lid downward. Unscrew the two captive thumb screws holding the cover on the "A" battery compartment which is mounted on the inner face of the lid. Place the five cells in the compartment with the positive (+) center studs against the terminals located farthest from the hinge, and with the bottom of the cells against the retaining springs. Replace the cover plate and tighten the thumb screws.

(b) PLATE: Withdraw the two pairs of wires from the battery compartment and connect each pair to its mating connectors on the B cells. Insert the batteries with an upward motion in the space provided. Close and secure the lid on the compartment.

2. Use of External Power Supply: When extended observations are to be made, or when a recorder is employed, an external source of power is recommended. A six-pin receptacle is mounted on the rear of the case to facilitate the connections of external batteries or an AC power supply unit. The wiring details of the plug terminals are shown in the schematic, Figure 6. An Amphenol No. 91 MPF6L plug is required to make this connection.

To convert the meter from internal to external battery operation, remove the internal A and B batteries and tape up the B-battery connectors individually to prevent shorting to the case. Connect the external batteries to the plug as shown in the schematic, Figure 6.

When using an AC power supply unit, refer to the instructions which accompany it.

3. Use of Recording Equipment: For recording field strength measurements, a pin jack is provided on the panel, to supply 0.5 to 5.0 volts, D.C., into a high-impedance input D.C. amplifier. The amplifier is necessary for the operation of a recorder over the range of the meter. Install the external amplifier and recording equipment in accordance with the instructions supplied with them.

Operation:

The operation of the 120-E Field Strength Meter may be divided into three procedures as follows:

a. Checking the battery voltages (See paragraph 1)

b. Meter Calibration (See paragraph 2)

c. Measuring signal strength (See paragraph 3)

1. Checking the Battery Voltages: Voltages should be checked before taking the meter into the field; replace the batteries prior to using the equipment in the field, if voltmeter readings approach the minimum permissable values stated below:

a. Open the front cover of the 120-E.

b. Move POWER switch to CAL position.

c. Place the meter switch successively in positions AR, BR, AC and BC, and check that the panel meter indication is within the area of the green band between the "5" and "7" marks on the meter scale. The lower

limit of this band corresponds to 1.1 volts for the "A" batteries and to 50 volts for the "B" batteries.

2. Meter Calibration: The meter should always be calibrated at the frequency of the signal to be measured, to eliminate any error due to frequency-sensitive components in the circuits. The procedure is as follows:

(a) Set up the meter on a flat support or a unipod at the point where signal strength is to be measured. A unipod is preferred since the 120-E may then be more easily pivoted for a null reading. Open the cover of the instrument and swing it to a vertical position. The interior loop is now ready for use.

(b) Turn POWER switch to ON and place LOG-LIN switch to LIN.

(c) Set FULL SCALE RANGE switch to a value approximating the signal strength to be expected. The COARSE GAIN control about three-quarters on, and FINE GAIN control about one-half on. Lack of satisfactory control by FINE GAIN may be rectified by adjustment of the COARSE GAIN control. However, change in the COARSE GAIN control may have a slight effect on receiver tuning; this should be checked before actually calibrating the gain. The FINE GAIN control has a sufficient range to take care of most gain variations. The COARSE GAIN control should require only occasional adjustment.

(d) Place METER switch on FI.

(e) Adjust RECEIVER tuning to frequency of signals to be measured. Approach the setting from right or left to obtain maximum deflection on the indicating meter.

RETAIN THIS TUNING ADJUSTMENT FOR SUBSEQUENT CALIBRATION AND FIELD MEASUREMENTS.

When the signals are peaked rotate the 120-E to get minimum meter indication. NOTE: Due to the high degree of selectivity of this instrument, it will be found to tune sharply, and careful attention should be given to peak response. On some 120-E's a slightly different meter reading may result when the resonance point is approached from opposite skirts of the peak. This is solely due to mechanical characteristics inherent in each individual production model.

When making readings on 910 kc at low signal strengths with the instrument set at full gain, some trouble may be experienced due to the second harmonic of the intermediate frequency being coupled back to the loop through the headset cord. Disconnection of the telephone headset will, of course, rectify this discrepancy.

(f) Move the FULL SCALE RANGE switch to CAL.

(g) Turn POWER switch to CAL.

(h) Tune the CALIBRATING OSCILLATOR until an indication is noted on the meter, then increase the deflection to maximum reading.

(i) Move the METER switch to OSC position and note the meter deflection.

(j) Return METER switch to FI position and adjust COARSE GAIN control to obtain about the same meter indication as in Step (i). Check by switching back and forth between FI and OSC positions, adjusting the FINE GAIN control as required. With the COARSE GAIN control setting once established, it should be possible to calibrate by using the FINE GAIN control only.

(k) Place METER switch in FI position and move POWER switch to ON position to cut off oscillator circuit.

THE METER IS NOW CALIBRATED FOR THE FREQUENCY OF THE SIGNAL TO WHICH IT WAS ORIGINALLY TUNED.

3. Measuring Signal Strength: With the 120-E correctly oriented and calibrated for the frequency of

the signal to be measured, proceed as follows:

(a) Set METER SCALE RANGE switch to some value approximating signal strength expected; then set LOG-LIN switch to LIN.

(b) With POWER switch at "ON", rotate the instrument to obtain maximum deflection on the indicating meter, moving METER SCALE RANGE switch, if necessary, to keep the pointer scale. Read the field strength direct from this meter, using the setting of FULL SCALE RANGE switch as a guide to meter scale values. For example, with the METER SCALE RANGE switch on 100 MV, for which setting the full-scale reading of 10 is equal to 100 milli-volts per meter, a reading of 2.3 indicates a field intensity of 23 millivolts per meter.

4. Operating Procedure Summary: Use of the Field Strength Meter involves the three procedures described in paragraphs 1, 2 and 3, which may be summarized as follows:

(a) Check voltages before starting a series of field strength measurements.

(b) Calibrate the meter when first set up and check calibration for each measurement.

(c) Cut off power by moving POWER switch to OFF immediately upon completing a measurement. This will increase battery life to a noticeable extent and the 120-E may be switched on and used instantly, as there is no warm-up period required.

5. Use of LOG-LIN switch: This switch is normally left in the LIN position for field strength measurements to obtain meter deflections that are directly proportional to the signal strength and permit direct reading of the values. The LOG position of the switch is intended for use when an external DC amplifier and recorder is used with the equipment. With the switch in the LOG position the effect is to compress the range of the output voltages, being relatively larger for weak signals and smaller for strong signals. Under this condition the rectified output voltage and meter indications are not directly proportional to the input signal strength but to a power (log or db) of the field signal intensity.

The LOG position of the switch may be used to advantage when searching for weak signals, going over to LIN for making the actual field measurements.

6. Turning Off Equipment: When field tests have been completed, turn the POWER switch to the OFF position. Note that closing the lid of the instrument opens the microswitch S-5 and cuts off current to the receiver if POWER switch is inadvertently left on; but the oscillator filament circuit is not protected if switch is left in the CAL position. Therefore, make certain POWER switch is OFF before closing cover.

Maintenance

Barring damage due to accident, replacing batteries, cleaning loop contacts, and replacing tubes and crystals, should constitute the bulk of the required maintenance.

Since the loop is in a fairly high-Q circuit, the contacts must be kept clean. Erratic operation of this otherwise high-quality test unit can quite often be traced to dirty loop contacts or plungers. These contacts should be cleaned with methyl chloroform or alcohol and then burnished with a piece of fine canvas, or other equally effective but gentle abrasive material.

1. Tube Replacement: Tubes should not be replaced or exchanged with each other unless there is good reason to believe this is necessary. In this case, RCA types are to be recommended.

Tube failures may be divided into three classes: namely, complete failure (open or low-emissive filaments) noisy, microphonic and erratic operation (loose internal elements or cold-soldered tube pins).

Of these classifications, noisy and erratic operation will probably be the cause for most tube replacements. These symptoms may be brought out by tapping each tube with a lead pencil while an unmodulated signal is being received. However, direct substitution is the best method to check a suspected tube. Transformer T-5 is adjusted for optimum linearity with the associated tube supplied. Replacing VT-5 may have some effect. A low-emission tube will not supply enough power in this stage to give acceptable linearity.

When replacing a tube under manual gain control (VT-4 and VT-2) it is well to check for an undesirable "cut-off" characteristic. A simple check is to snap the associated GAIN control to minimum gain and notice if the panel meter indication follows without appreciable drifting upscale. However, care should be exercised that there be no confusion with bad receiver crystal (1N38A).

2. Crystal Replacement: Crystal diodes are not uniform from unit to unit. Occasionally a crystal will develop symptoms for which there is no satisfactory explanation. Type 1N38A crystals are specified to include certain standard characteristics. These semi-conductor diode crystals are tested by impressing a pressure of one volt in the forward direction while passing a current of at least five milliamperes. Further, with fifty volts developed in the reverse direction, the reverse current must be less than eight tenths of a milliampere (0.8 ma.) The back resistance varies over a wide range from one crystal to another. It is not as important that each crystal possess comparatively high back resistance as it is that the resistance remain stable. Replacement crystals should be checked with particular reference to stable inverse conductivity.

(a) Calibrating Oscillator Crystal: In the calibrating oscillator, the crystal's back resistance is directly shunted across the rank circuit. Any variation of inverse resistance in this crystal diode will produce an apparent drifting of the calibrating oscillator output and more often a frequency shift. This effect appears most evident at the higher frequencies and may best be checked by tuning in a signal at the high end of the broadcast band, then zero-beating the calibrating oscillator against this R. F. signal. Turn off the calibrating oscillator for a few seconds, then switch it on; it should quickly zero-beat with the signal. All these details do not substantially affect the accuracy of the Field Intensity Meter provided the calibrating oscillator actually is tuned to the maximum R. F. frequency response possible for this highly-selective receiver; and the GAIN controls are adjusted for calibration level. Otherwise, inaccurate readings will result. Incidentally, diode crystal replacement in the oscillator circuit will result in less than a two-percent change in calibration.

(b) Receiver Crystal: The symptoms of a defective receiver crystal, located at the end of the I. F. chain, are easily apparent. With a steady signal applied from the calibration oscillator, set for about 1,000 kc, or from a broadcast station carrier exhibiting negligible carrier shift, switch to the next higher attenuator step momentarily, and then return to the original attenuator setting. The meter reading should almost immediately return to its original indication. Should the needle settle at another reading (usually higher) then, over a period of a few seconds, drift to its original reading, the receiver crystal's back resistance is unstable. This symptom should not be confused with the momentary surge effect noted in some crystal diodes, such as is caused when switching to a lower attenuator step.

Another similar check is made by adjusting the GAIN control for a full-scale indication on a steady signal and then switch to the next higher attenuator step. The meter reading should reach its final value without appreciable drifting upward. An additional test is to adjust for a meter indication on "1" and then switch to the next lower attenuator step. The meter reading should reach its final value with possibly very slight drift downscale.

In the condition of extreme back-resistance drift of the receiver diode, it will prove almost impossible to calibrate this instrument. The indications are that with the meter function switch moved to the OSC position, the load is lifted from the detector. Then, when the switch is returned to the DI position, the meter reading will not immediately repeat but will drift momentarily. Further, a defective receiver crystal will affect the linearity of the instrument, particularly if the crystal has very low back resistance, invariably indicated by extreme drift in back-resistance symptoms. Replacement of the defective crystal should correct this condition. If any adjustment of the last I. F. transformer was made when the original crystal became defective, the linearity of the instrument should be rechecked.

3. Alignment Procedure: Under normal conditions, experience has indicated that the I. F. stages are very stable and require no alignment. The receiver and calibrating oscillator trimmer condensers and tuning slugs may require occasional refinements. Adjustment of the local oscillator trimmer necessitates adjustment of the R. F. and loop trimmers because of the degree of receiver selectivity. To obtain average conditions for the alignment procedures, it is desirable to use batteries that have dropped to about the center value of their useful range. This may be indicated by the center of the green band on the meter scale.

(a) Normal Field Alignment:

(1) Tune in a signal at a frequency in the vicinity of 1500 kc and adjust for a convenient indication on the panel meter.

(2) Adjust C-52 and receiver tuning until dial indicates correct frequency at maximum indication on the panel meter.

(3) This step must be done with the FULL SCALE RANGE switch in the 10-MV position. Set signal generator to 1480 kc and tune the receiver for maximum indication. Adjust C-18 and C-1 for maximum indication on the panel meter.

(4) Tune in a signal of known frequency near the high-frequency end of the broadcast band. Set the FULL SCALE RANGE switch to CAL. Turn on calibrating oscillator and set dial to read correct frequency. Adjust C-56 for zero beat.

(b) Complete I. F. Alignment:

(1) With a FULL SCALE RANGE switch on 10 MV, tune receiver to low-frequency portion of broadcast band away from any transmitter carrier.

(2) Adjust GAIN controls, coarse and fine, properly in a clockwise direction.

(3) Set Signal Generator at 455 kc and couple by means of coil placed next to instrument loop in opened cover of 120-E.

(4) Battery voltages should maintain a mean value of around 1.3 for filaments and 60 for B+.

(c) IF Adjustment:

Make sure power supply ratings are satisfactory. (See (4) above.)

(1) T-5: CAUTION: It is strongly recommended that no adjustments be attempted in the field because of the inordinate difficulty experienced with impedance-matching to achieve proper linearity.

(2) T-3, T-4: Adjust top and bottom permeability tuning slugs on each IF transformer for peak readings on the panel meter. Adjust the GAIN of the Signal Generator for meter reading of

approximately 8 to 9 on the Model 120-E indicating meter.

(3) C-20: (Located in the attenuator box.) Adjust for peak reading of the panel meter.

(4) Continue refinement of T-4, T-3 and C-20 until no further increase of output is possible.

(d) Complete Receiver Local Oscillator Realignment:

(1) Set RECEIVER tuning dial to 600 kc if no carriers here.

(2) Couple a 600-kc signal generator (or frequency chosen) by means of a coil placed close to the loop on the 120-E.

(3) Adjust the core of the local oscillator coil T-6 for maximum indication on the panel meter.

(4) Set the signal generator and receiver tuning dial to 1500 kc, or other frequency not occupied by a BC carrier.

(5) Adjust C-52 for maximum indication on the meter panel.

(6) Repeat steps (1) through (5) for final adjustment.

(e) Complete R. F. and Loop Alignment:

(1) The FULL SCALE RANGE switch must be in the 10-MV position for all R. F. and loop alignment. Couple the signal generator to the loop as in paragraph (d) above. 610 kc and 1480 kc are nominal tracking points. Alignment should be made at these frequencies unless there is interference from another signal.

(2) Set signal generator to 610 kc and tune in signal. Adjust GAIN for a convenient indication.

(3) Adjust core of R. F. transformer T-1 for maximum indication on panel meter.

(4) Adjust core of loop loading coil L-2 for maximum indication on panel meter.

(5) Set signal generator on 1480 kc and tune in signal. Adjust GAIN for a convenient indication.

(6) Adjust C-18 for a maximum indication on the panel meter.

(7) Adjust C-1 for maximum indication on the panel meter.

(8) Repeat steps (2) through (7) until no readjustment is required.

(f) Complete Calibrating Oscillator Adjustment:

(1) With FULL SCALE RANGE switch on CAL, tune in a signal at 600 kc.

(2) Set calibrating oscillator dial to 600 kc.

(3) Adjust core of T-7 for zero beat.

(4) Tune in a signal at 1500 kc.

(5) Set calibrating oscillator dial to 1500 kc.

(6) Adjust C-56 for zero beat.

(7) Recheck steps (1) through (6).

4. Linearity: Linearity of the instrument is specified as being within 3% of the indicated reading for "A" battery operating voltages from 1.5 to 1.1 volts and "B" battery operating voltages from 70 to 50 volts. Linearity has been adjusted and checked at 1.5 and 70 volts, 1.3 and 60 volts, and 1.1 and 50 volts with a precision 10-step attenuator.

5. Attenuators: The attenuating networks are adjusted at the factory with the aid of precision test equipment in the field.

IT IS RECOMMENDED THAT NO ADJUSTMENT OF THE ATTENUATORS BE ATTEMPTED IN THE FIELD.

The substitution capacitor, C-4, plays an important part in the accuracy of the attenuators. It is the proper adjustment of this capacity that renders the attenuators' frequency insensitive to the ranges below 100 MV, full scale. The schematic diagram will show that when switching from the 100 MV to 10 MV full-scale range, the R. F. attenuator is cut out. At this time the "arm capacity" of the R. F. attenuator becomes part of the loop tuned circuit, replacing C-4. If these two capacities are not exactly equal, detuning will result in the loop circuit. Tracking error between the receiver local oscillator and loop circuits makes this adjustment more critical, since the same tracking error must be maintained with the interchange of these capacities. If follows that all lower full-scale range would also be affected by a misadjustment of the substituting capacity.

Serious misalignment of the R. F. end of the receiver may introduce some frequency error in the attenuator. Realignment as noted in paragraph 3a, "normal field alignment", should correct this.

The procedure used in order to initially adjust C-4 is quite lengthy and involved. No simple system has yet been worked out which will give sufficient adjustment accuracy. If this adjustment has been disturbed, even slightly, the instrument must be returned to the factory for readjustment.

For trouble-shooting, a rough check of the attenuator ratios can be made by tuning in a signal, adjusting the GAIN control for a reading of 10, and switching to the next higher range. The meter indication should drop back to approximately 1 on the scale (within the tolerances of linearity and attenuator adjustments.)

6. Removal of the Chassis From the Case:

(a) Remove the screws holding the ends of the telescoping braces to the cover of the meter.

(b) Remove the screws from the top, ends, and bottom of the case that hold the front panel and chassis assembly to the case.

(c) Removal of the chassis from the case is now prevented by the three spring-loaded loop contact plungers in back of the loop hinge. Press these studs down as far as possible and work the chassis out of the case. Do not apply excessive force in removing the chassis, which might stress the leads to the plug in the back of the chassis and bend the plug contacts.

7. Friction Clutch on Receiver and Calibrating Oscillator Control Knobs:

Each of the RECEIVER and CALIBRATING OSCILLATOR control knobs includes a friction clutch to drive the corresponding graduated dial. If, due to wear, slippage should develop in either one of these clutches, loosen the set-screw on the shank of the knob by means of an Allen wrench and remove the knob from its shaft. Then tighten the hex locknut on the shaft (front face of instrument panel).

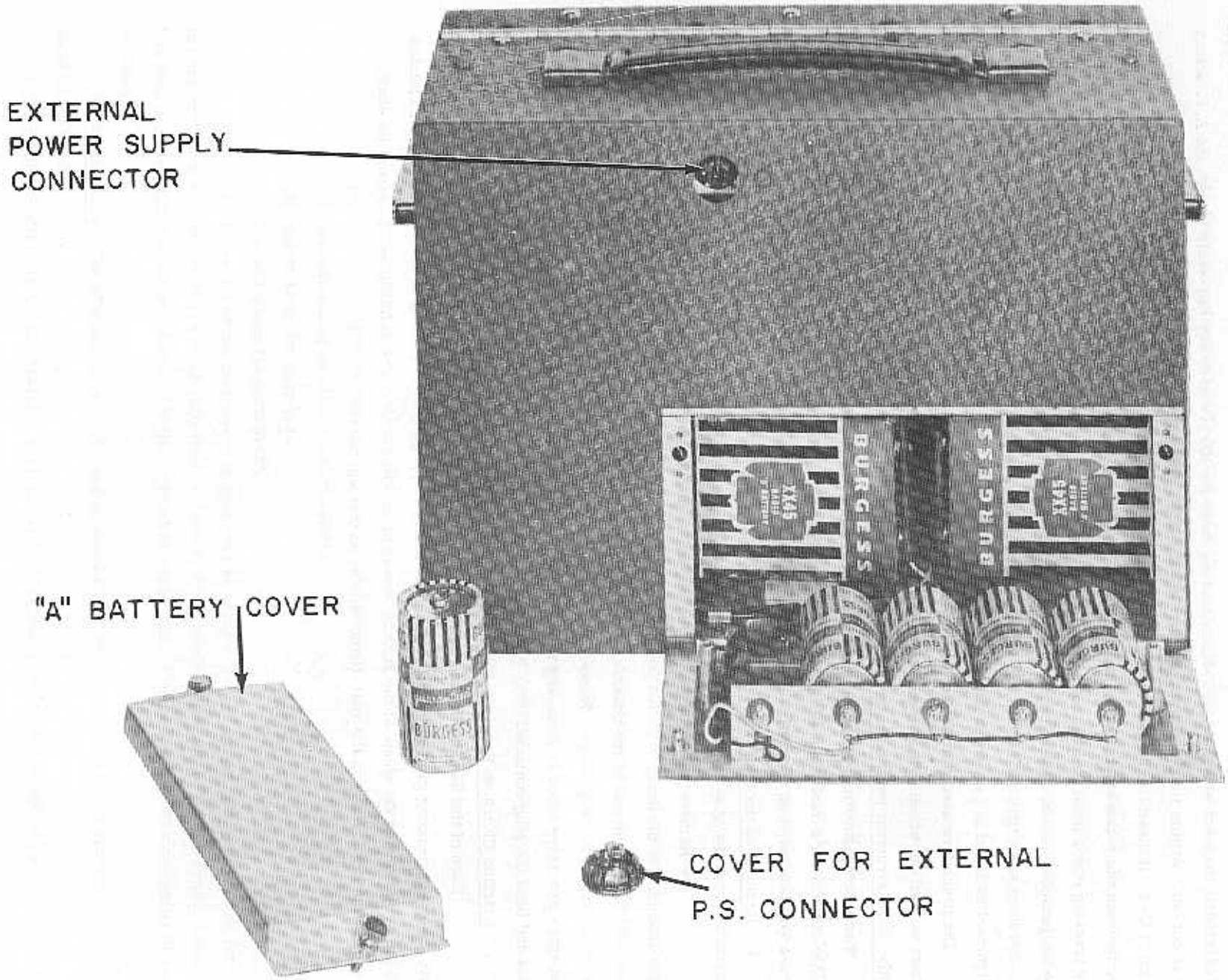

Figure 3. Field Strength Meter, Rear View, Battery Compartment Open

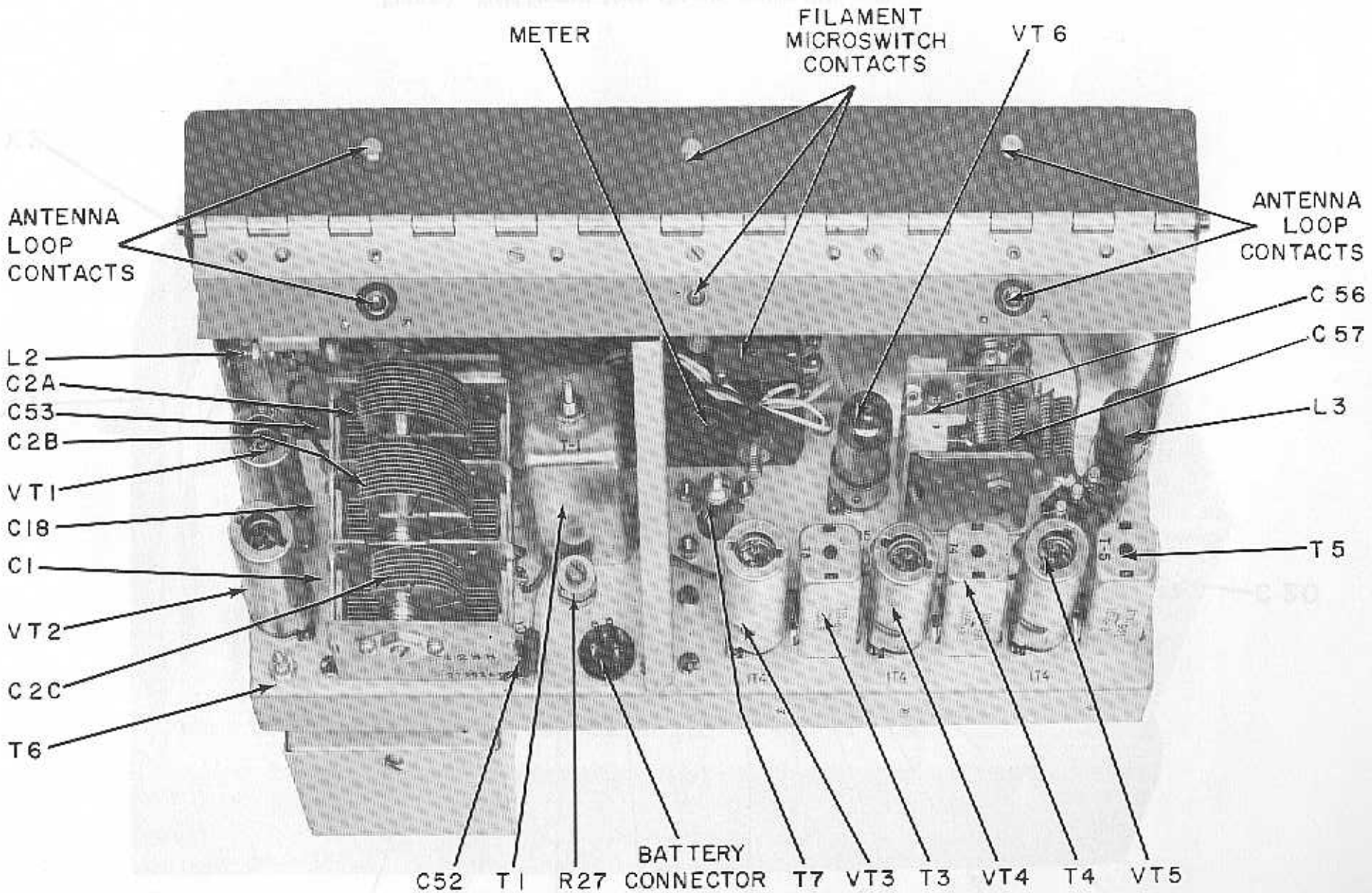

Figure 4. Field Strength Meter Chassis, Top Oblique View

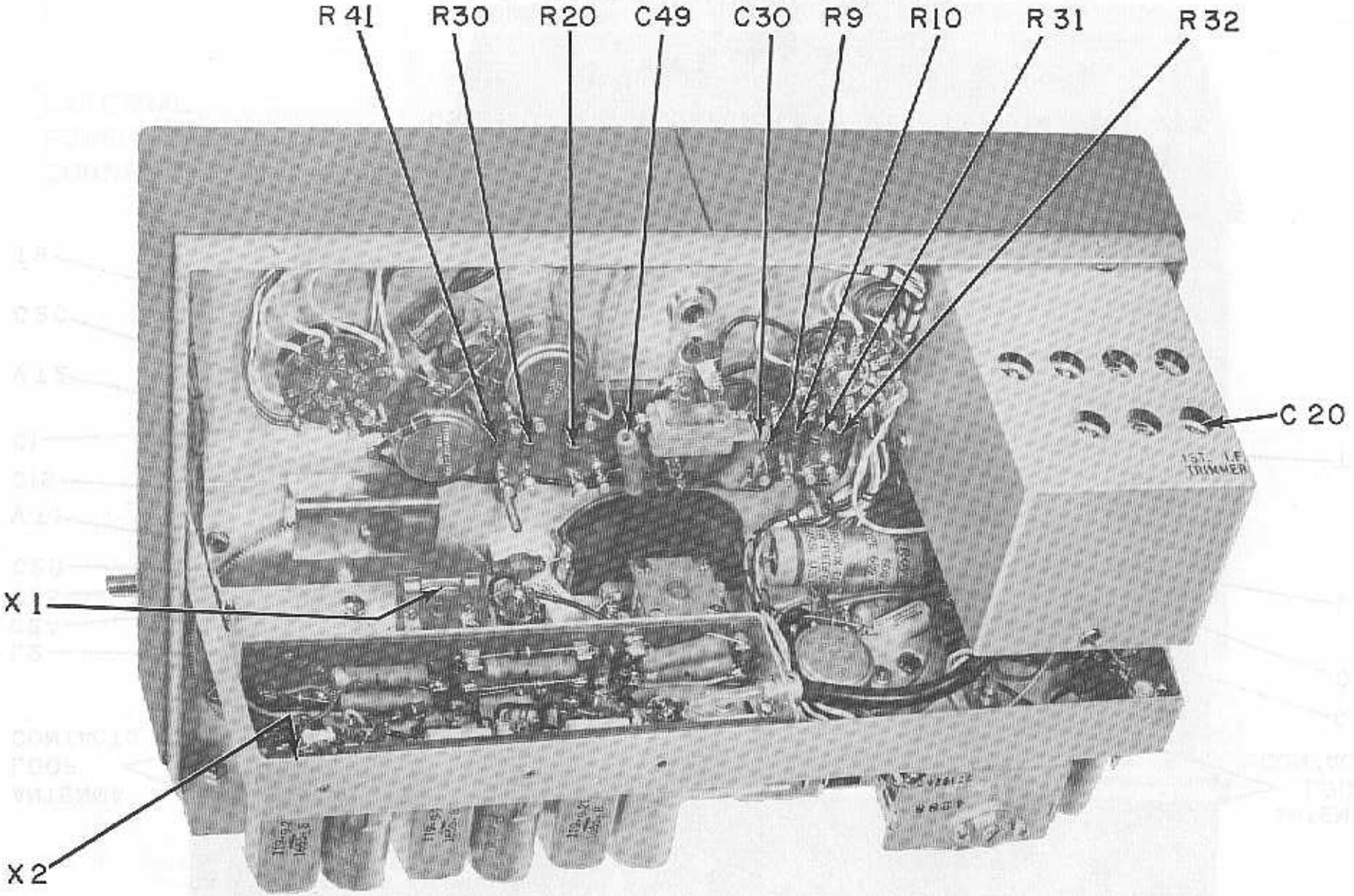

Figure 5. Field Strength Meter Chassis, Bottom Oblique View

PARTS LIST

MODEL 120-E FIELD STRENGTH METER

When ordering replacement parts, give the equipment name and model number, and the symbol number and description of each item ordered.

Replacement parts which will be supplied against an order may not be exact duplicates of the original parts. However, only minor differences in the electrical or mechanical characteristics will be involved and, consequently, will in no way impair the operation of the equipment.

PARTS LIST

MODEL 120-E FIELD STRENGTH

METER

Symbol	Description
C-1	CAPACITOR, VARIABLE, MICA: 2-15 μμf, p/o C-2A, B and C
C-2A, B, C	CAPACITOR, VARIABLE, AIR: 3-gang per Nems-Clarke A-120-526
C-3	CAPACITOR, CERAMIC: 30 μμf ±5%, 500V, Erie NP300K
C-4	CAPACITOR, VARIABLE, CERAMIC: 4-30 μμf, 500V, Erie TS-2A-4
C-5	CAPACITOR, MICA: 51 μμf ±5%, 500V, Elmenco CM15E510J
C-6	Same as C-4.
C-7	CAPACITOR, MICA: 68 μμf ±5%, 500V, Elmenco CM15E680J
C-8	CAPACITOR, VARIABLE, CERAMIC: 7-45 μμf 500V, Erie TS-2A-7
C-9	Same as C-7.
C-10	Same as C-8.
C-11	CAPACITOR, CERAMIC: 10 μμf ±10%, 500V, Erie NPO-K
C-12	Same as C-11.
C-13	Same as C-11.
C-14	CAPACITOR, PLASTIC: 0.1 μf ±20%, 150V, Gudeman 337Y104
C-15	CAPACITOR, CERAMIC: .01 μf ±20%, 1000V, Centralab DD-1032
C-16	CAPACITOR, CERAMIC: .01 μf GMV 600V, Centralab D6-103
C-17	Not used.
C-18	Same as C-1.
C-19	Same as C-14.
C-20	Same as C-4.
C-21	CAPACITOR, MICA: 82 μμf ±5%, 500V, Elmenco CM19D820J
C-22	CAPACITOR, MICA: 470 μμf ±5%, 500V, Elmenco CM19D471J
C-23	Same as C-16.
C-24	Same as C-3.
C-25	CAPACITOR, CERAMIC: 33 μμf ±5%, 500V, Erie N330K
C-26	CAPACITOR, MICA: 220 μμf ±5%, 500V, Elmenco CM19D221J
C-27	Same as C-8.
C-28	CAPACITOR, MICA: 270 μμf ±5%, 500V, Elmenco CM19D271J
C-29	Same as C-8.
C-30	Same as C-16.
C-31	Same as C-14.
C-32	Same as C-16.
C-33	Same as C-16.

PARTS LIST

MODEL 120-E FIELD STRENGTH

METER

Symbol	Description
C-34	p/o T-3, T-4 and T-5, not separately replaceable.
C-35	Same as C-34.
C-36	CAPACITOR, CERAMIC: 470 μμf ±10%, 500 WVDC, Erie GP2-331
C-37	Same as C-14.
C-38	Not used.
C-39	Same as C-34.
C-40	Same as C-34.
C-41	Same as C-16.
C-42	Same as C-36.
C-43	Same as C-14.
C-44	Same as C-16.
C-45	Same as C-16.
C-46	Same as C-34.
C-47	Same as C-34.
C-48	CAPACITOR, CERAMIC: 22 μμf ±10%, 500V, Erie N220K
C-49	Same as C-16.
C-50	CAPACITOR, CERAMIC: .001 μμf ±10%, 500V, Erie GP3-331
C-51	CAPACITOR, PAPER: .01 μf ±20%, 600V, Aerovox P-89M
C-52	Same as C-1.
C-53	CAPACITOR, CERAMIC: 20 μμf ±10%, 500V, Erie NPO-K
C-54	Same as C-16.
C-55	Same as C-36.
C-56	CAPACITOR, VARIABLE, CERAMIC: 2.7-30 μμf 175V, Elmenco #461 Type 46
C-57	CAPACITOR, VARIABLE, AIR: 0-420 μμf Variable condenser #V-2500-1
C-58	CAPACITOR, MICA: 500 μμf ±20%, 500V, Elmenco CM19D501M
C-59	Same as C-14.
C-60	Same as C-16.
C-61	CAPACITOR, MICA: 50 μμf ±10%, 500V, Erie N750K
C-62	Not used.
C-63	Same as C-3.
C-64 thru C-69	Not used.
C-70	Same as C-36.

PARTS LIST

MODEL 120-E FIELD STRENGTH

METER

Symbol	Description
C-71	Same as C-36.
C-72	CAPACITOR, PAPER: .25 μf 200V, Aerovox P-82
CR-1	CRYSTAL DIODE: clip-in type Sylvania 1N38A
CR-2	Same as CR-1.
E-1	SHIELD, ELECTRON TUBE: Cinch 8681
E-2	Same as E-1.
E-3	Same as E-1.
E-4	Same as E-1.
E-5	Same as E-1.
E-6	Same as E-1.
J-1	CONNECTOR, RECEPTACLE: Mallory A-1
J-2	CONNECTOR, RECEPTACLE: Amphenol 78-S or equal
L-1	COIL, ANTENNA: #24 HF Copper wire IN400
L-2	COIL, ANTENNA LOADING: per Nems-Clarke A-120-241
L-3	COIL, LOOP INJECTION: per Nems-Clarke A-120-197
L-4	CHOKE, FILAMENT: per Nems-Clarke A-120-167
L-5	Same as L-4.
L-6	Same as L-4.
L-7	Same as L-4.
L-8	Same as L-4.
L-9	Not used.
L-10	Not used.
L-11	Not used.
L-12	COIL, IF: p/o attenuator per Nems-Clarke A-120-239
M-1	METER, FIELD STRENGTH: 200 μa scale, per Nems-Clarke B-120-505 Marion Model #55
R-1	RESISTOR, FIXED COMPOSITION: 3.3 meg ±10%, 1/2W, Allen Bradley EB-3351
R-2	RESISTOR, FIXED COMPOSITION: 4.7 Meg ±5%, 1/2W, Allen Bradley EB-4755
R-3	RESISTOR, FIXED COMPOSITION: 33K ±5%, 1/2W, Allen Bradley EB-3335
R-4	RESISTOR, FIXED COMPOSITION: 47K ±10%, 1/2W, Allen Bradley EB-4731
R-5	RESISTOR, FIXED COMPOSITION: 1K ±10%, 1/2W, Allen Bradley EB-1021
R-6	RESISTOR, FIXED COMPOSITION: 100K ±10%, 1/2W, Allen Bradley EB-1041
R-7	RESISTOR, FIXED COMPOSITION: 2.2K ±10%, 1/2W, Allen Bradley EB-2221
R-8	RESISTOR, FIXED COMPOSITION: 1 Meg ±10%, 1/2W, Allen Bradley EB-1051

PARTS LIST

MODEL 120-E FIELD STRENGTH

METER

Symbol	Description
R-9	Same as R-8.
R-10	Same as R-1.
R-11	RESISTOR, FIXED COMPOSITION: 10K ±10%, 1/2W, Allen Bradley EB-1031
R-12	Same as R-5.
R-13	Same as R-8.
R-14	Same as R-8.
R-15	Same as R-5.
R-16	Same as R-8.
R-17	RESISTOR, FIXED COMPOSITION: 10 meg ±10%, 1/2W, Allen Bradley EB-1061
R-18	Same as R-5.
R-19	Not used.
R-20	RESISTOR, FIXED COMPOSITION: 27K ±5%, 1W, Allen Bradley GB-2735
R-21	Same as R-8.
R-22	RESISTOR, FIXED COMPOSITION: 270 Ω ±10%, 1/2W, Allen Bradley EB-2211
R-23	RESISTOR, FIXED COMPOSITION: 820 Ω ±10%, 1/2W, Allen Bradley EB-8211
R-24	RESISTOR, VARIABLE COMPOSITION: 2.5K ±10%, 2W, Allen Bradley JA1N048P252UA
R-25	Not used.
R-26	RESISTOR, FIXED COMPOSITION: 27K ±5%, 1/2W, Allen Bradley EB-2735
R-27	RESISTOR, VARIABLE COMPOSITION: 5K ±10%, 2W, Allen Bradley JA1N040P502UA
R-28	Same as R-7.
R-29	Same as R-7.
R-30	RESISTOR, FIXED COMPOSITION: .56 meg, ±5%, 1/2W, Allen Bradley EB-5645
R-31	RESISTOR, FIXED COMPOSITION: 12K ±10%, 1/2W, Allen Bradley EB-1231
R-32	Same as R-30.
R-33	RESISTOR, FIXED COMPOSITION: 50K ±10%, IRC Type HFR
R-34	Same as R-2.
R-35	Same as R-33.
R-36	RESISTOR, FIXED COMPOSITION: 22 meg ±10%, 1/2W, Allen Bradley EB-2261
R-37	Not used.
R-38	Not used.
R-39	Not used.
R-40	Same as R-2.
R-41	Same as R-7.
R-42	RESISTOR, VARIABLE COMPOSITION: 10K ±10%, 2W, Allen Bradley JA1N048P103UA

PARTS LIST

MODEL 120-E FIELD STRENGTH

METER

Symbol	Description
R-43	RESISTOR, FIXED COMPOSITION: 1.5K ±10%, 1/2W, Allen Bradley EB-1521
S-1A	SWITCH: section p/o attenuator per Nems-Clarke A-120-191
S-1B	SWITCH: section p/o attenuator per Nems-Clarke A-120-190
S-1C	SWITCH: section p/o attenuator per Nems-Clarke A-120-189
S-1D	SWITCH: section p/o attenuator per Nems-Clarke A-120-192
S-2A, B	SWITCH, ROTARY: Oak #5454-F1
S-3A, B, C, D	SWITCH, ROTARY: Oak #5423-F1
S-4	SWITCH, TOGGLE, SPDT: HH Smith #511
S-5	SWITCH, PLUNGER: Micro V3-1
T-1	TRANSFORMER, RF: per Nems-Clarke A-120-169
T-2	Not used
T-3	TRANSFORMER, IF: Automatic Mfg. Co. #1655-8
T-4	Same as T-3.
T-5	Same as T-3.
T-6	COIL, LOCAL OSCILLATOR: per Nems-Clarke A-120-240
T-7	COIL, CALIBRATING OSCILLATOR: per Nems-Clarke A-120-166-1
V-1	TUBE, ELECTRON: RCA 1T4
V-2	TUBE, ELECTRON: RCA 1R5
V-3	Same as V-1.
V-4	Same as V-1.
V-5	Same as V-1.
V-6	Same as V-2.
XCR-1	CRYSTAL HOLDER: per Nems-Clarke A-120-136
XCR-2	Same as XCR-1.
XV-1	SOCKET, ELECTRON TUBE: 7 pin miniature, Elco BR-151-BC-.125
XV-2	Same as XV-1.
XV-3	Same as XV-1.
XV-4	Same as XV-1.
XV-5	Same as XV-1.
XV-6	Same as XV-1.

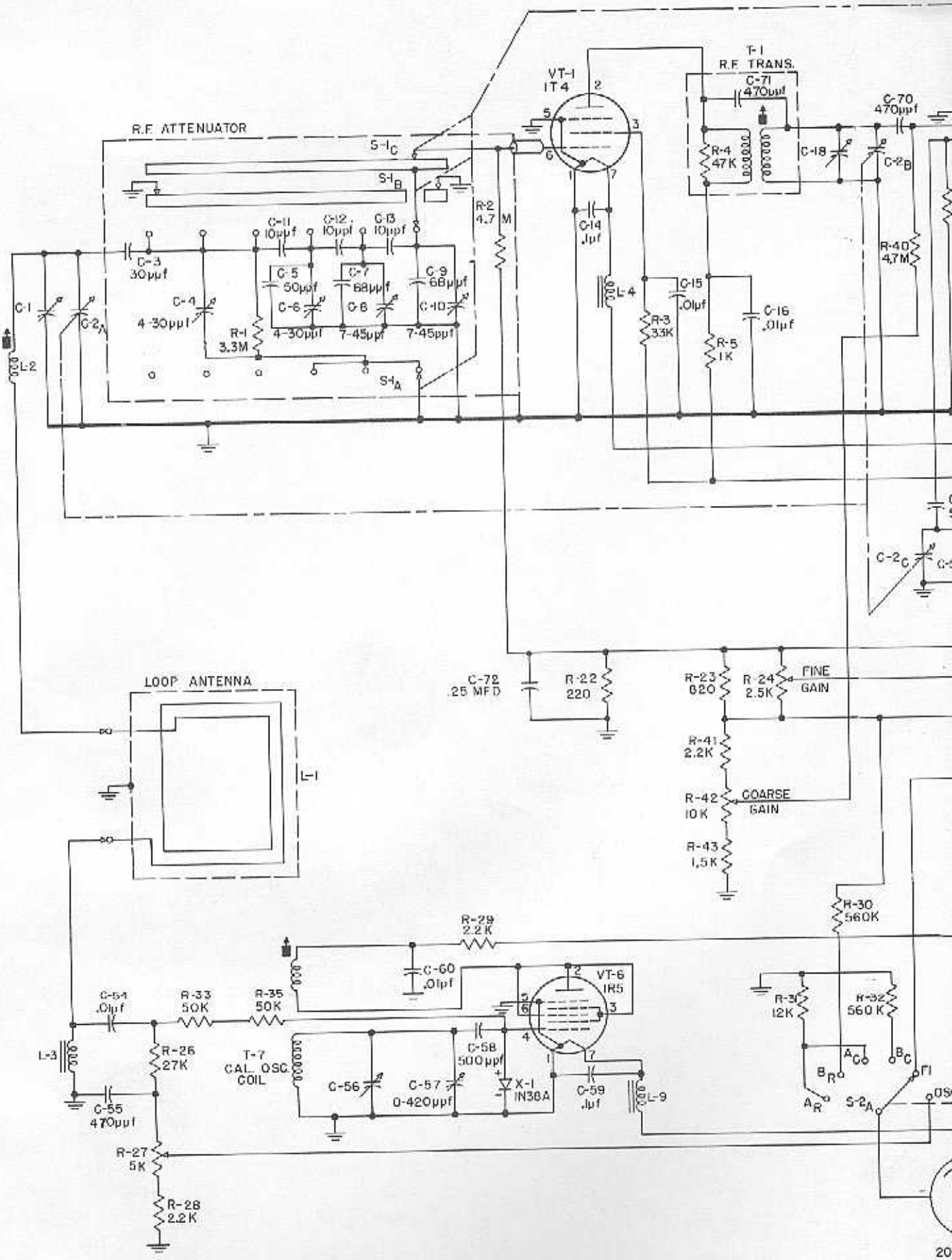
R.F. ATTENUATOR
S-1C
S-1B
S-1A
VT-1
1T4
T-1
R.F. TRANS.
C-71
470μμf
C-70
470μμf
R-4
47K
C-18
C-2B
R-2
4.7 M
C-14
.1μf
L-4
C-15
.01μf
C-16
.01μf
R-3
33K
R-5
1K
R-40
4.7M
C-3
30μμf
C-11
10μμf
C-12
10μμf
C-13
10μμf
C-5
50μμf
C-7
68μμf
C-9
68μμf
C-6
C-8
C-10
C-4
4-30μμf
R-1
3.3M
4-30μμf
7-45μμf
7-45μμf
C-1
C-2A
L-2
C-2C
LOOP ANTENNA
L-1
C-72
.25 MFD
R-22
220
R-23
820
R-24
2.5K
FINE
GAIN
R-41
2.2K
R-42
10K
COARSE
GAIN
R-43
1.5K
R-30
560K
R-29
2.2K
C-60
.01μf
VT-6
1R5
C-54
.01μf
R-33
50K
R-35
50K
L-3
R-26
27K
T-7
CAL. OSC.
COIL
C-58
500μμf
C-56
C-57
0-420μμf
X-1
1N38A
C-59
.1μf
L-9
C-55
470μμf
R-27
5K
R-28
2.2K
R-31
12K
R-32
560K
AC
BC
BR
AR
S-2A
F1
OS

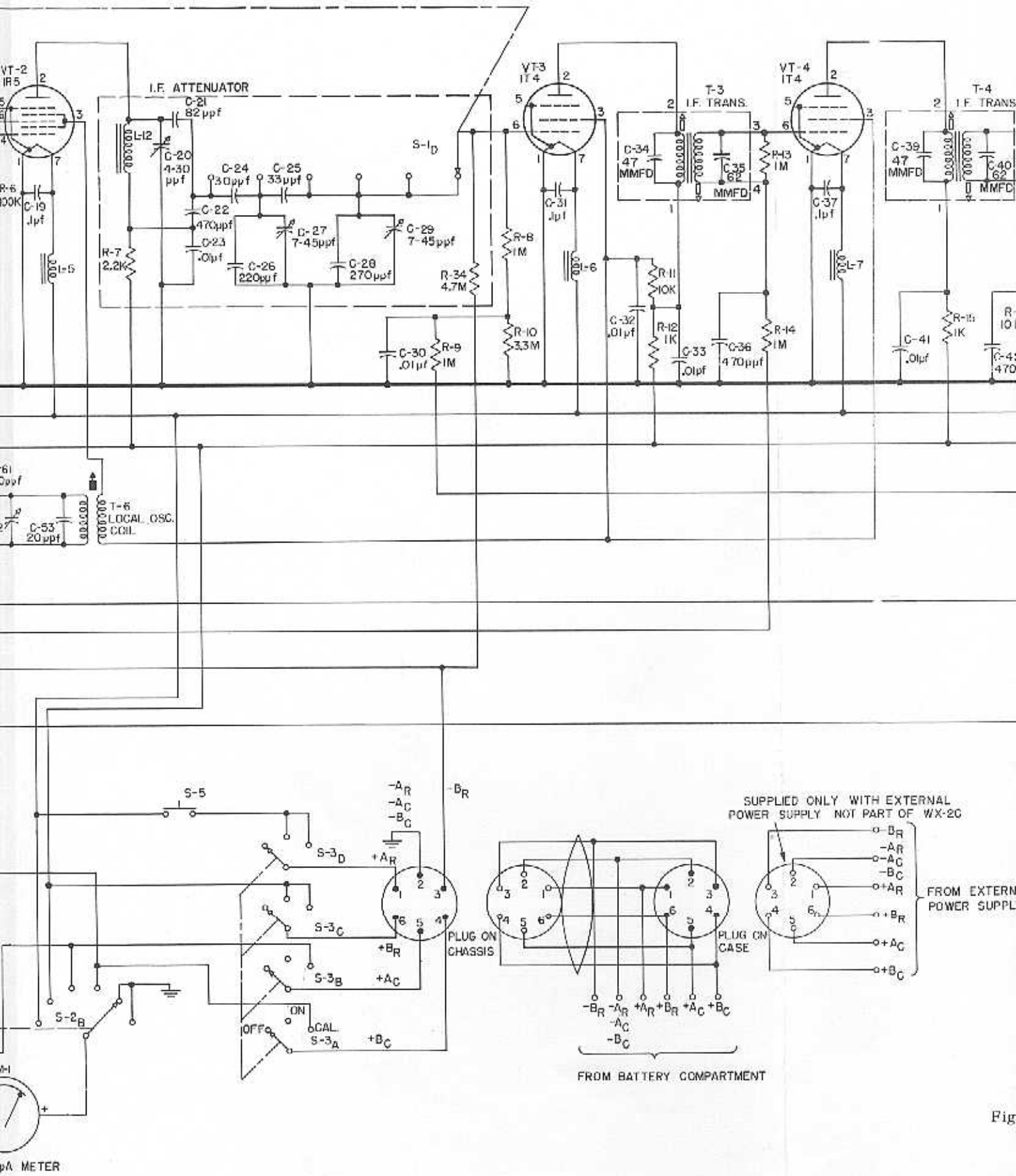
VT-2
IR5
I.F. ATTENUATOR
C-21
82 μμf
L-12
C-20
4-30
μμf
C-24
30μμf
C-25
33μμf
S-1D
C-22
470μμf
C-23
.01μf
C-26
220μμf
C-27
7-45μμf
C-28
270μμf
C-29
7-45μμf
R-7
2.2K
R-6
100K
C-19
.1μf
L-5
R-34
4.7M
R-8
1M
R-10
3.3M
C-30
.01μf
R-9
1M
VT-3
IT4
C-31
.1μf
L-6
VT-4
IT4
T-3
I.F. TRANS.
C-34
47
MMFD
C-35
62
MMFD
R-43
1M
C-37
.1μf
L-7
R-11
10K
R-12
1K
C-32
.01μf
C-33
.01μf
C-36
470μμf
R-14
1M
T-4
I.F. TRANS.
C-39
47
MMFD
C-40
62
MMFD
C-41
.01μf
R-15
1K
T-6
LOCAL OSC.
COIL
C-53
20μμf
S-5
S-3D
S-3C
S-3B
S-3A
S-2B
ON
OFF
CAL.
-AR
-AC
-BC
-BR
+AR
+BR
+AC
+BC
PLUG ON
CHASSIS
PLUG ON
CASE
FROM BATTERY COMPARTMENT
SUPPLIED ONLY WITH EXTERNAL
POWER SUPPLY NOT PART OF WX-20
FROM EXTERN
POWER SUPPL
μA METER

Fig

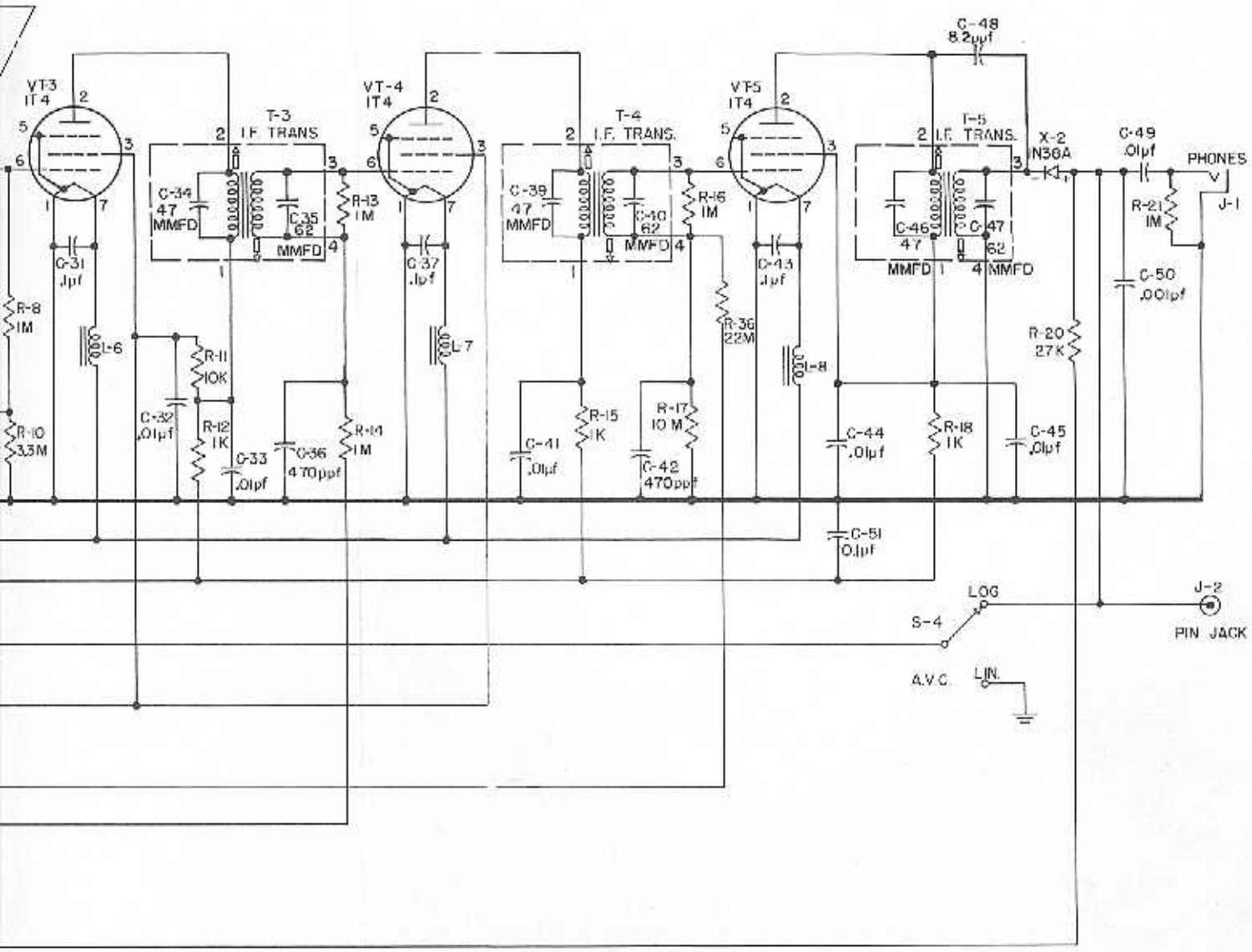

B-120-513-2-D

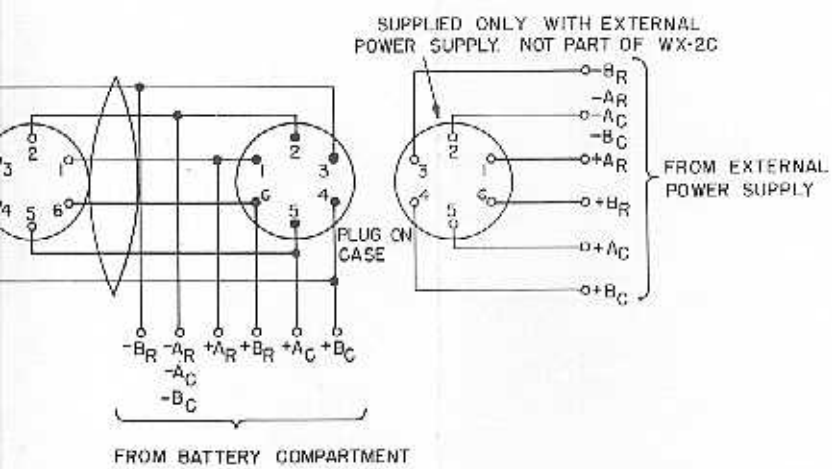

Figure 6. Schematic Diagram, Field Strength Meter 120-E

INSTRUCTION BOOK

FOR

MODEL 120-E

FIELD STRENGTH METER

WMCA 570 & 970 DJ
NEW YORK'S CHRISTIAN RADIO

SALEM MEDIA CORPORATION OF NEW YORK
777 TERRACE AVENUE, 6TH FLOOR, HASBROUCK HEIGHTS, NJ 07604-3100
(201) 298-5700 • (201) 298-0700 • FAX: (201) 298-5797
www.nycradio.com • office@nycradio.com

919 Jesup-Blair Drive, Silver Spring, Md.

A Division of Vitro Corporation of America