The home of the turntable

THE VINYL ENGINE®

For more turntable manuals and setup information
please visit www.vinylengine.com

Technics SP-10mkIIp
Service Manual

Scanned by Sean
pdf created by JaS

Service Manual

Player

SP-10MKIIP (XGE)

(RP-2/9)

■ SPECIFICATIONS

Type:	Direct-drive turntable
Turntable paltter:	Aluminum diecast, diameter 32 cm (12-19/32 inches), weight 2.9 kg (6.4 lbs.), moment of inertia 380kg. cm² (130 lbs. in²)
Motor:	Brushless DC motor, electronic rectification, quartz-controlled phase-locked servo circuit
Platter speeds:	33-1/3, 45 and 78.3r.p.m.
Starting torque:	6 kg. cm (5.2 lbs. in)
Build-up time	0.25 sec. (25° rotation) to 33-1/3r.p.m.
Braking time:	0.3 sec. (30° rotation) from. 33-1/3r.p.m. to standstill
Speed fluctuation by load changes:	0% within 5 kg. cm (4.3 lbs. in)
Speed drift:	Within ± 0.002%
Speed variation:	0~±5% (0.5% step)
Wow & Flutter:	0.025% (JIS C5521) W.R.M.S. ±0.035% (DIN 45507), weighted, zero-to-peak
Rumble:	−60 dB (IEC 179B) −50 dB (DIN 45539A) −70 dB (DIN 45539B)
Power Supply:	AC 110/120/220/240V, 50/60Hz
Power Consumption:	40W
Dimensions:	Turntable Only 36.85 (W) x 10.25 (H) x 36.85 (D) cm (14-31/64 x 4-1/64 x 14-31/64 inches) Control center 45.0 (W) x 9.6 (H) x 36.7 (D) cm
Weight:	Turntable Only;9.5 kg (20.9 lbs.) Control Center; 7.8 kg

Technics

Matsushita Electric Trading Co., Ltd.
P.O. Box 288, Central Osaka Japan

■ PARTS IDENTIFICATION

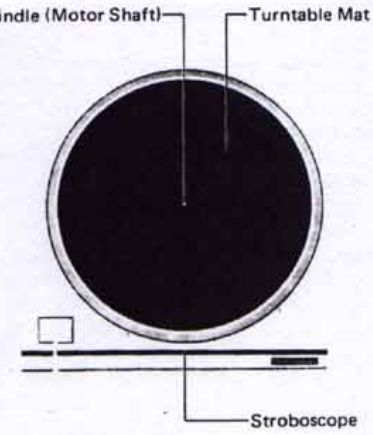

Fig. 1

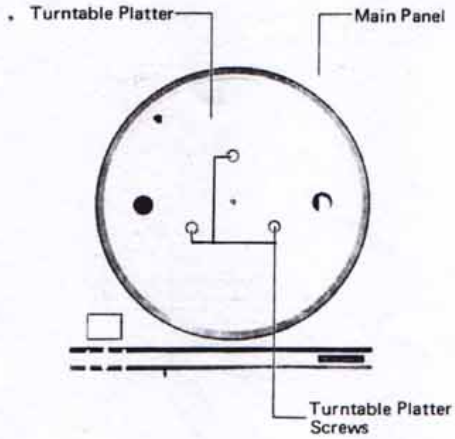

Fig. 2

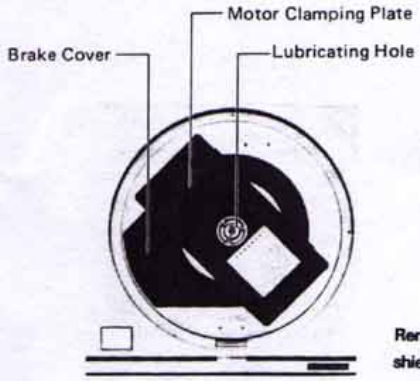

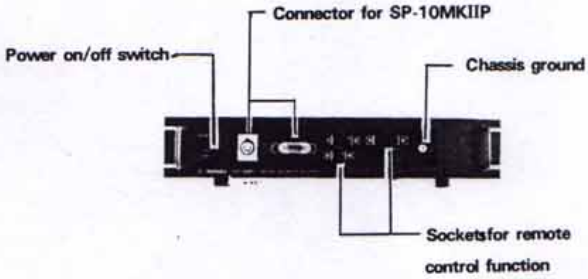

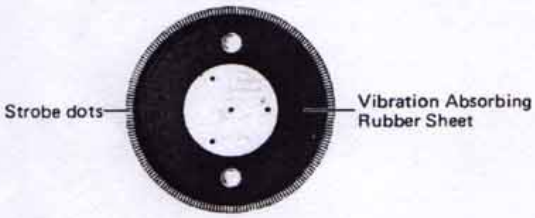

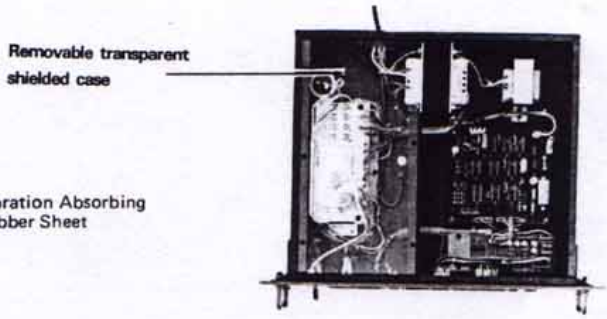

Fig. 4

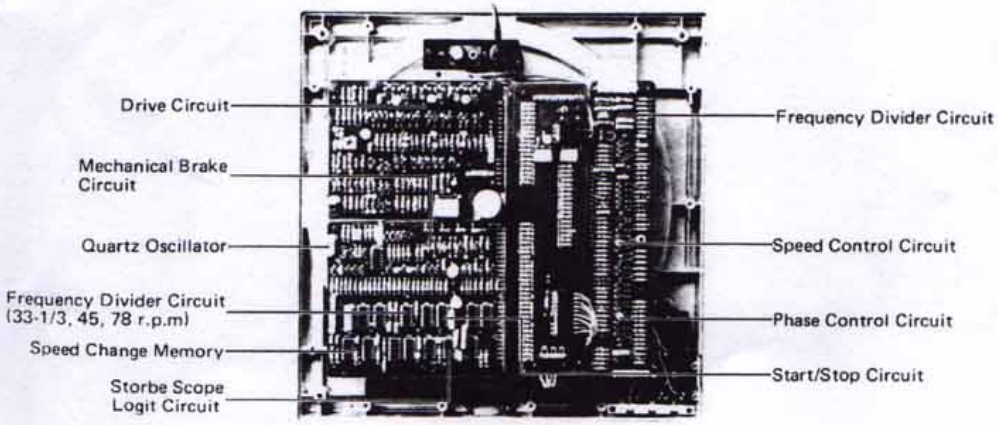

Fig. 5

■ ASSEMBLY AND SET-UP

1. Building a base or cabinet for this model

The starting torque of this model is 6Kg. cm. (5.2 1bs. in).
Thus the turntable platter which is heavy (2.9kg. 6.4 1bs.) and large (32cm. 12-19/32 inches) can be started and stopped quickly. For this reason we recommend that you use durable and heavy material. The thickness of the base should be 3cm. (1-11/64 inch) or more in order to bring out the best performance of model.

Note: Use durable and stable insulators (legs) Fig. 6 shows an example of cabinet construction.

2. Drill and cutout the bace according to the installation diagram.

As paper has a tendency to stretch we suggest that you check the diagram before using it as a template. Also check dimensions for printing errors. Check the tone arm mounting position for proper alignment (follow the tonearm manufacturers specifications). Also make sure to allow sufficient clearance for power connector and output terminals of the tone arm.

3. Install the unit in the cabinet

Two kinds of screws are included in the carton. Use the proper length of screw according to the thickness of the cabinet which you use. When you install the unit in the cabinet place proteotive material, on top of the unit to protect the center spindle from external damage. A soft cloth placed on the panel surface will protect it from scratches.

4. Remove the motor clamping plate and screws (Fig. 8)

After installation of the unit in the cabinet remove the seven blue screws and motor clamping plate.

NOTE: To protect the very delicate and important parts of the motor (spindle, motorshaft etc.) from external damage during transportation protective fittings have been installed. Be sure to remove these fittings carefully and save them for future use in case you again need to transport the unit.

NOTE: Dimensions are marked in millimeters. (25.4 mm are equal to inch.)

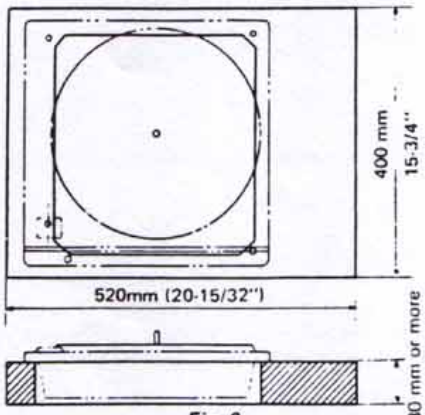

Fig. 6

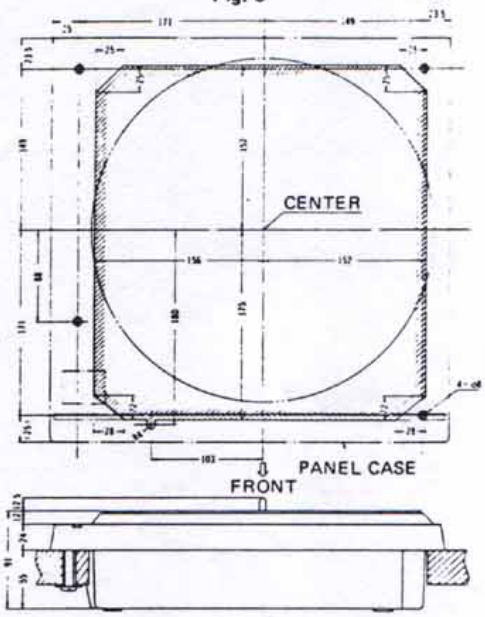

Fig. 7

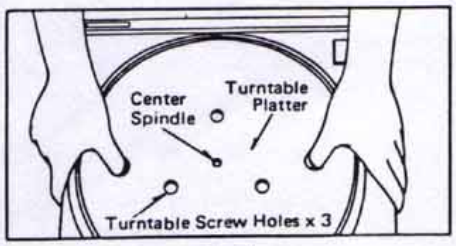

Fig. 9

5. Securing the turntable platter (Fig. 9 & 10)

Place the turntable platter on the spindle aligning holes in the platter with the rotor screw holes by eye.

Slightly lifting the turntable platter will make it easier to align the holes. Using the three screws supplied, firmly tighten the turntable platter and put the turntable mat on it.

NOTE: The turntable platter must be tightened at all three points. To assure proper operation.

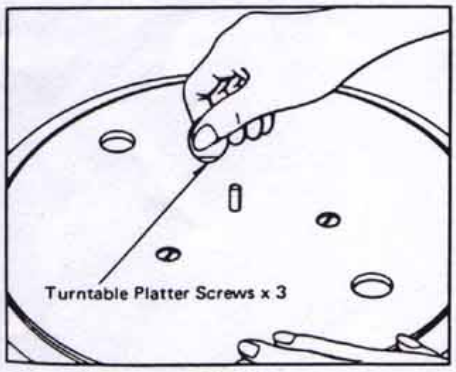

Fig. 10

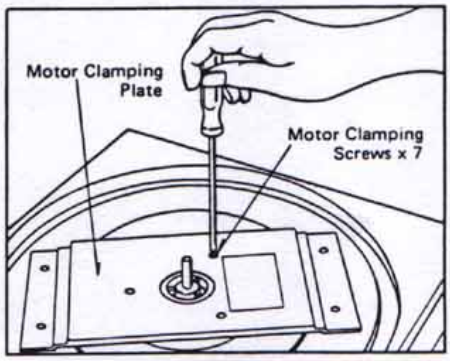

Fig. 8

■ OPERATION PRINCIPLES OF THE SP-10MKII

1. Quartz Generated Reference Signal

The quartz reference signal generator provides a reference signal which controls the action of the SP-10MKII. The oscillation of a quartz crystal is used. This oscillation is stable, highly accurate and not effected by temperature and other changes. The signal generated by the reference signal generator is split by the frequency divider into the appropriate frequency according to the speed selected.

2. Pitch Control Circuit

The reference frequency is varied within ±5% with 0.5% step by pitch control circuit.
This circuit controls of programable devider and phase locked loop (P.L.L), which synthesizes the accurate speed variation of turntable rotation.

3. Frequency Devider

This devider is controlled by setting by the speed selection switch.
The selected speed information is stored in the speed change digital memory.

4. Stroboscope Logic Circuit

The strobscope lights up the 190 stripes engraved on the platter rim. A neon lamp flashes according to instructive pulses from the stroboscope logic circuit. The circuit shapes digitally the signals from the frequency divider. This provides a sharp strobe image which is independent of external power source frequency.

5. Frequency Generator

A frequency generator is integrated with the platter drive motor. It is electromagnetic structure using a push-pull design cancels external induction. It converts accurately the platter rotation speed into a frequency. The output of the frequency generator is fed to the speed and the phase control circuits.

6. Phase Control Circuit

The phase control circuit detects a phase difference between a reference signal and a frequency generator signal and generates a control voltage. This circuit makes it possible to lock the rotation of the turntable platter to a reference signal. It improves considerably speed stability and speed control characteristics for load conditions when compared with the conventional direct-drive motor having only speed control as shown in Fig. 11.

Comparison of stability against load variation

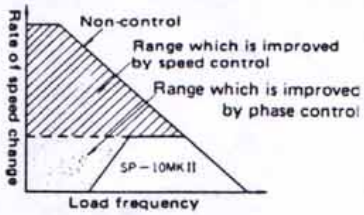

Fig. 11

7. Speed Control Circuit

The speed control circuit includes a sample-hold circuit, which converts the output of the frequency generator into an electrical voltage. This is the control voltage which maintains the platter rotation speed.

8. Drive Circuit

Two control signals are composed and applied to the drive circuit to maintain a forward motor-rotation. The drive circuit supplies fullwave drive current doubling current efficiency.
It supplies drive current in both directions for a symmetrical rotation in either a forward or reverse direction.
The drive circuit rotates the turntable platter with quick response and large starting torque.

9. Start/stop Circuit

When the unit is started by the switch, the stat/stop circuit activates the forwad drive. When the unit is switched off the start/stop circuit acticates the reverse drive and the mechanical brake actuating-circuits to perfom a quick stop action.

10. Mechanical Brake Actuating-Circuit

The mechanical brake actuating-circuit operates a solenoid plunger which pushes a brake shoe against the platter. Working in conjunction with the reverse drive current, the mechanical brake can bring the platter to a complete stop quickly and smoothly. A half-braking force is maintained after the platter has stopped making it easy to accomplish accurate cueing of a record.

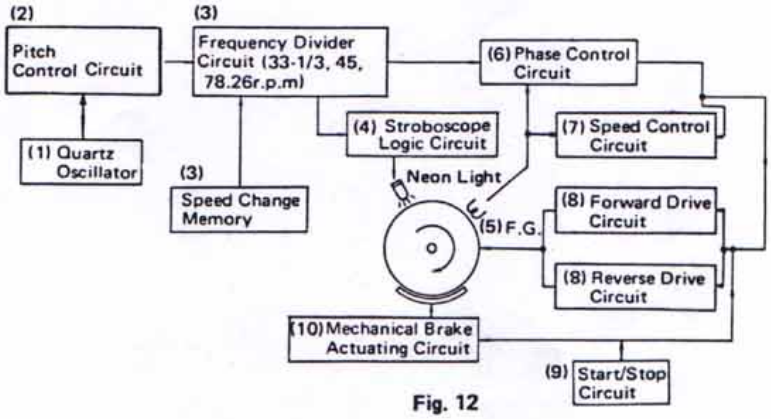

Fig. 12

Pitch Control Circuit

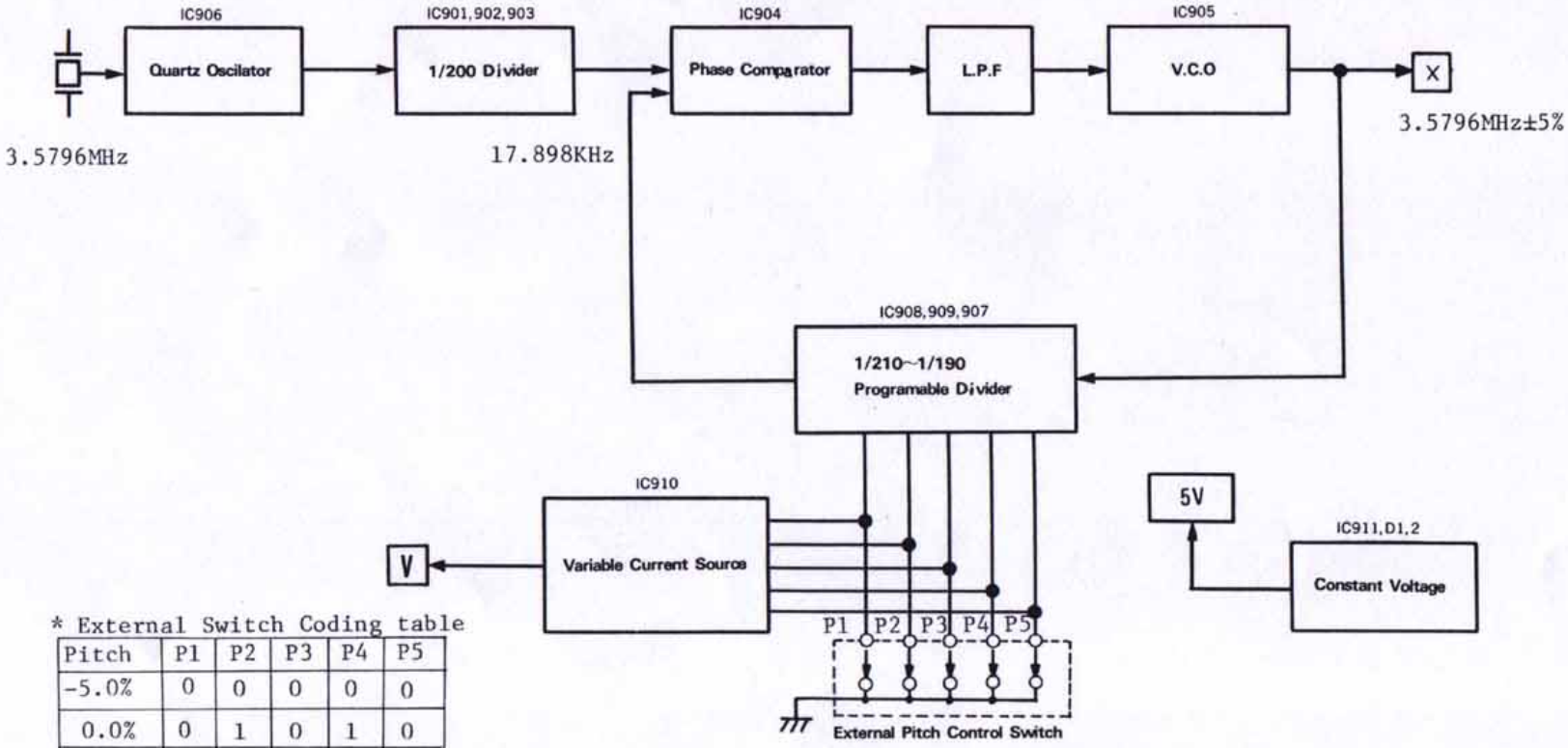

* External Switch Coding table

Pitch	P1	P2	P3	P4	P5
-5.0%	0	0	0	0	0
0.0%	0	1	0	1	0
+5.0%	1	0	1	0	0

■ BLOCK DIAGRAM

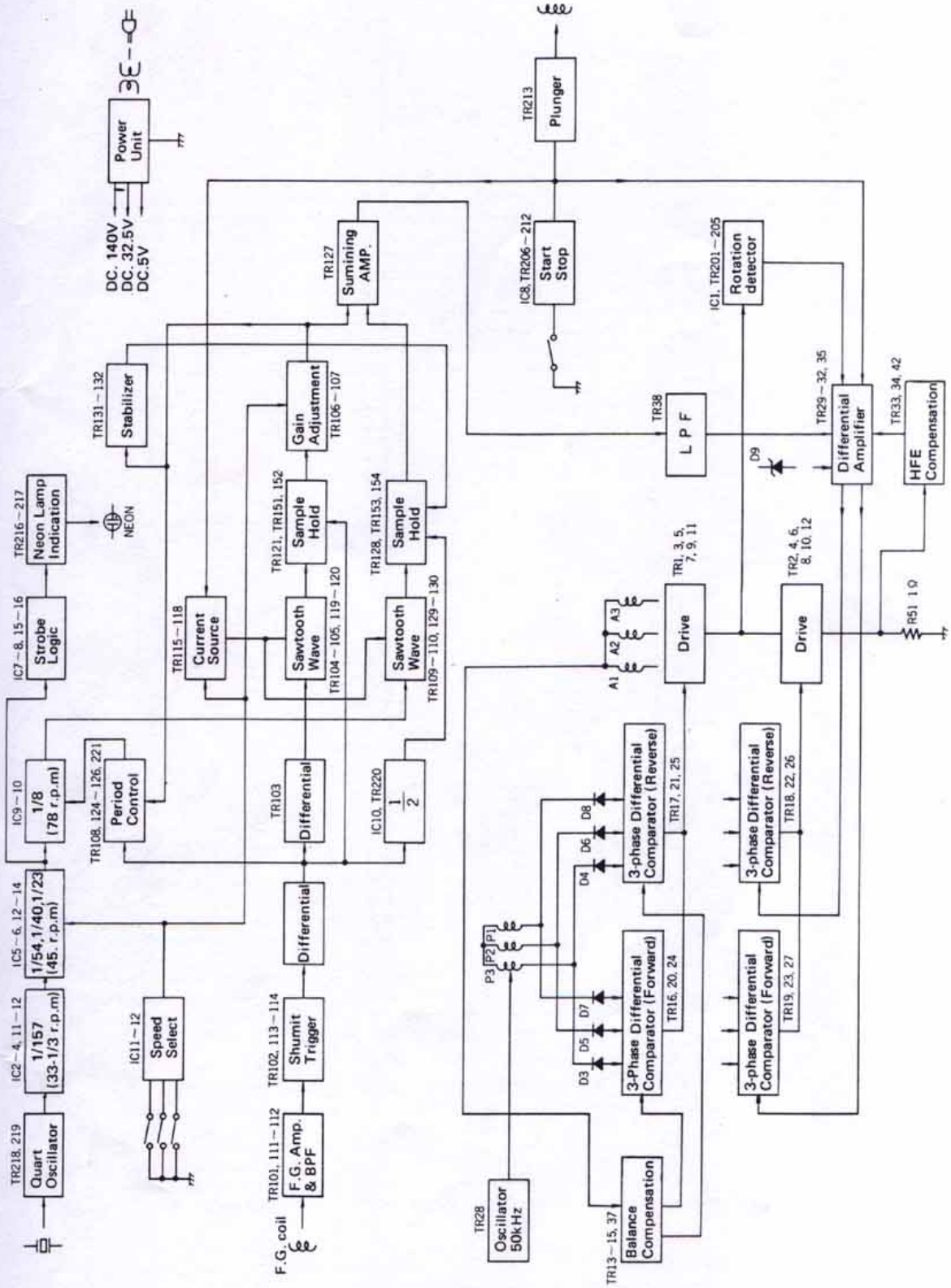

Fig. 15

SP-10MK2P Connector Circuit (SFDP102-01A)

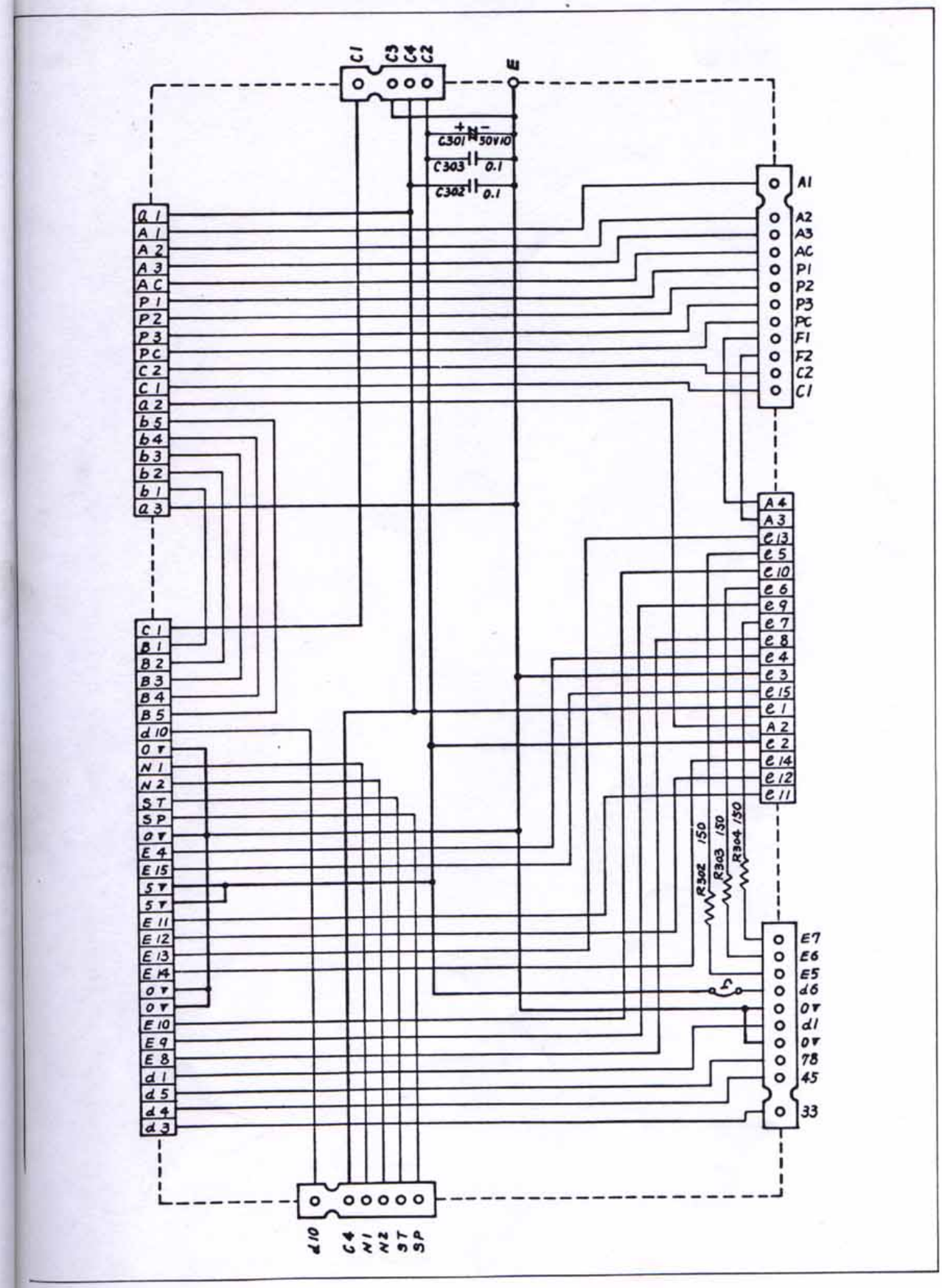

SP-10MK2P Drive Circuit (SFDP102-02A)

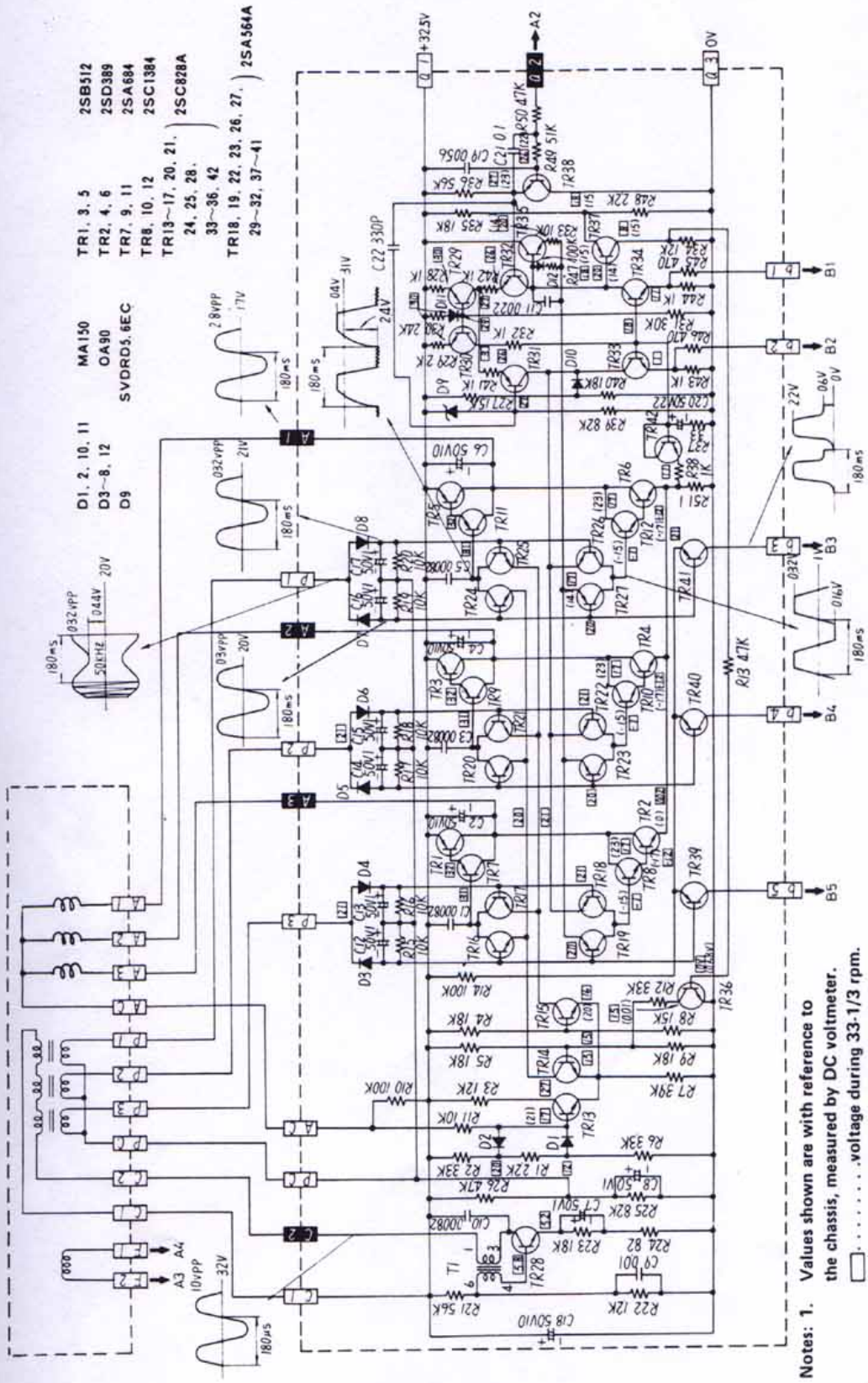

Notes: 1. Values shown are with reference to the chassis, measured by DC voltmeter.
□ . . . . . .voltage during 33-1/3 rpm.
( ) . . . . . .voltage when stopped.
Waveforms are during 33-1/3 rpm.

SP-10MK2P Control Circuit (SFDP102-04A)

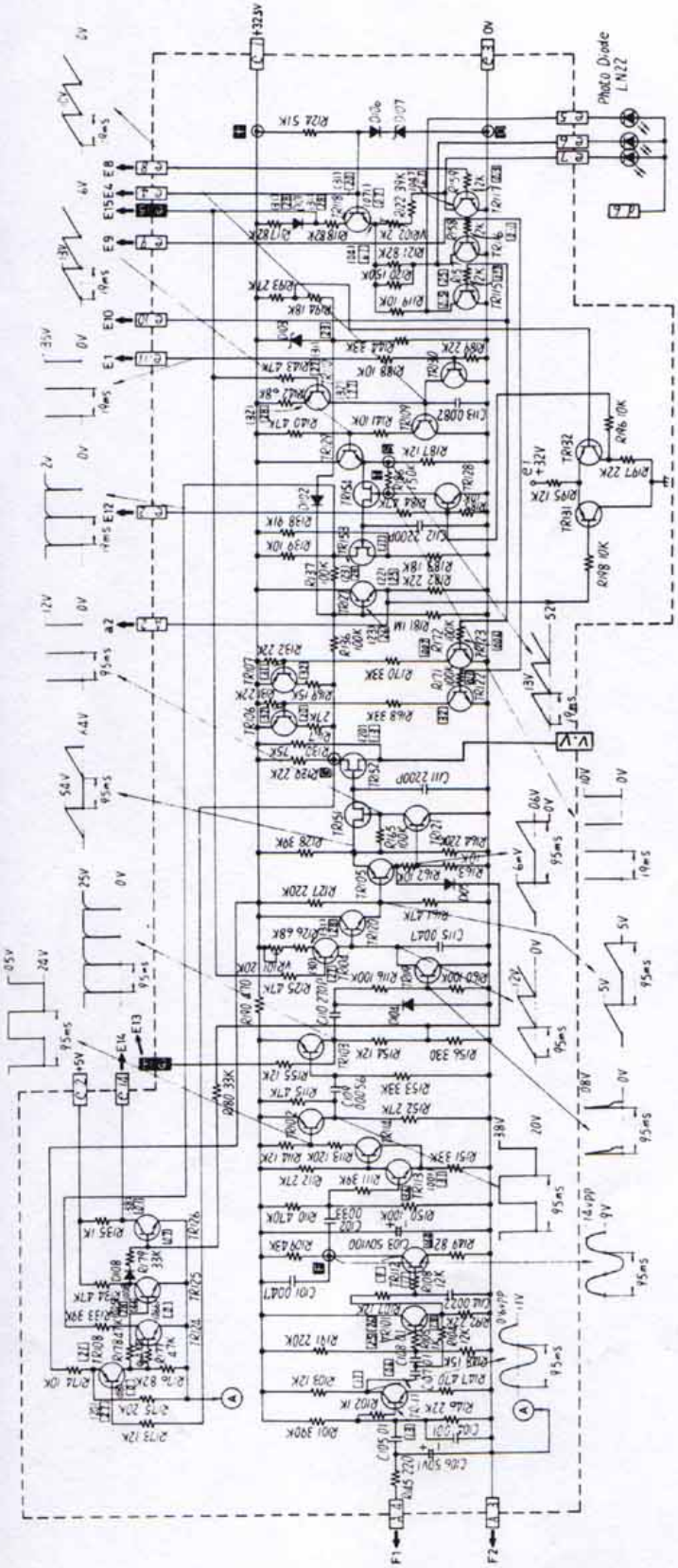

SP-10MK2P Logic Circuit (SFDP102-08A1)

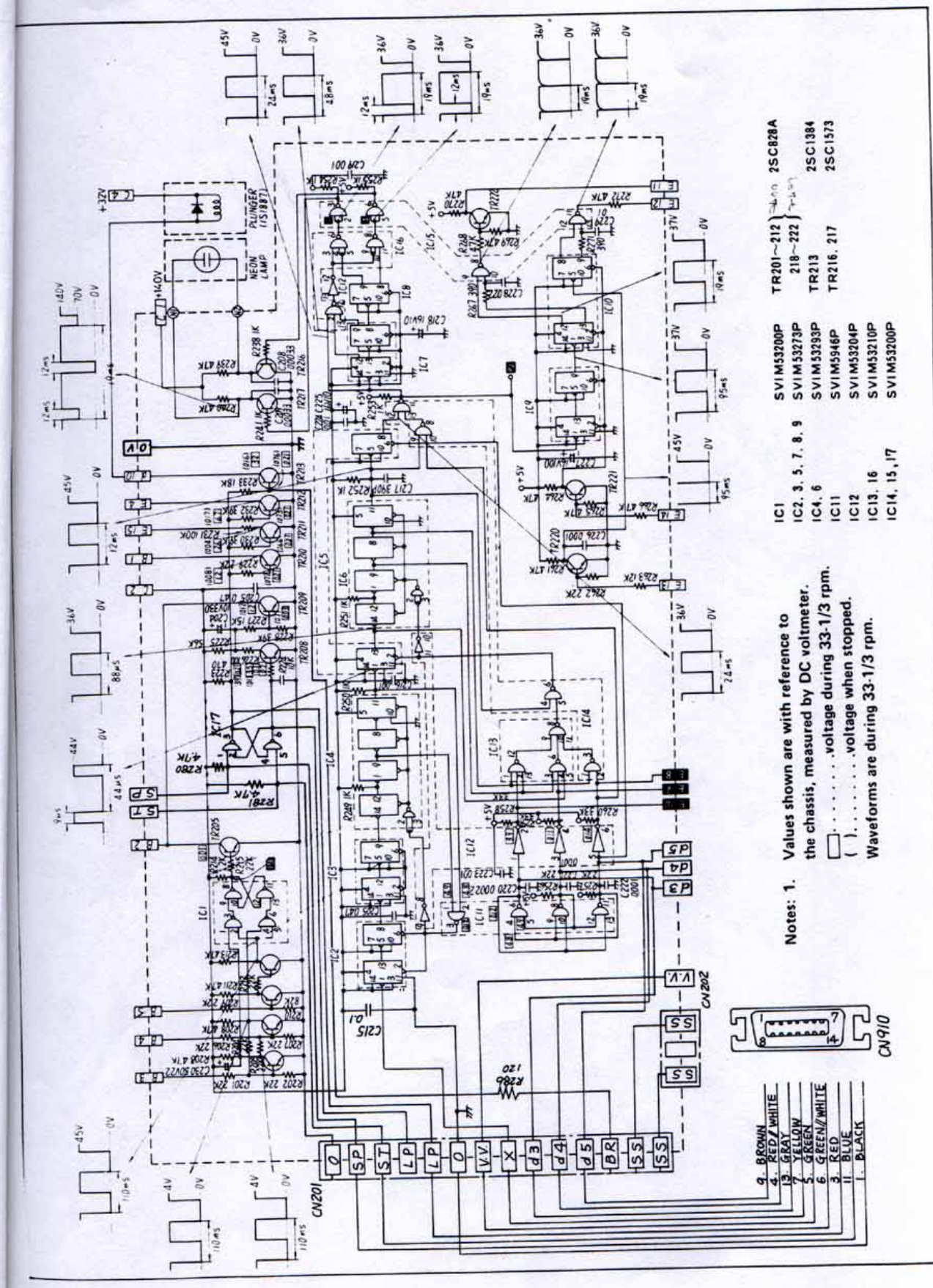

Notes: **S** indicates that only parts specified by the manufacture be used for replacement in critical circuits.

Power supply SFDP102-06,07

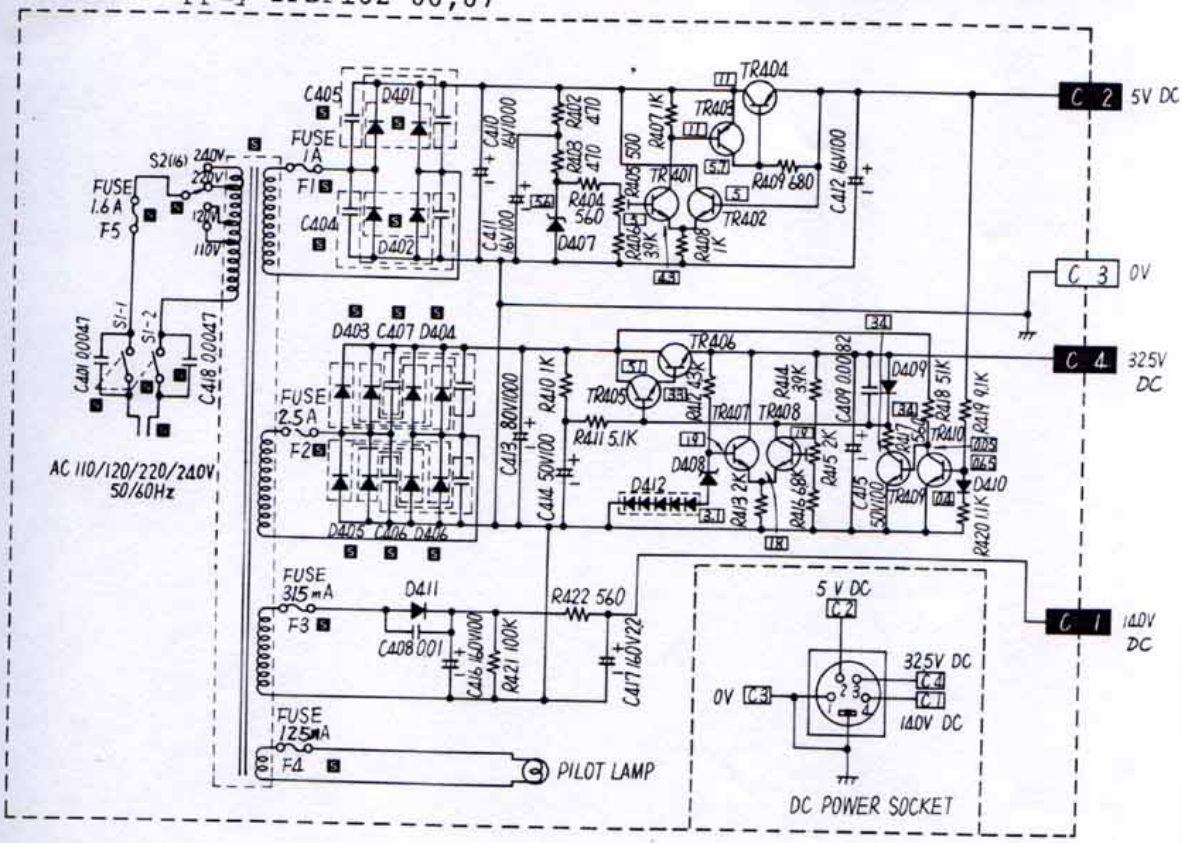

SFDP102-10

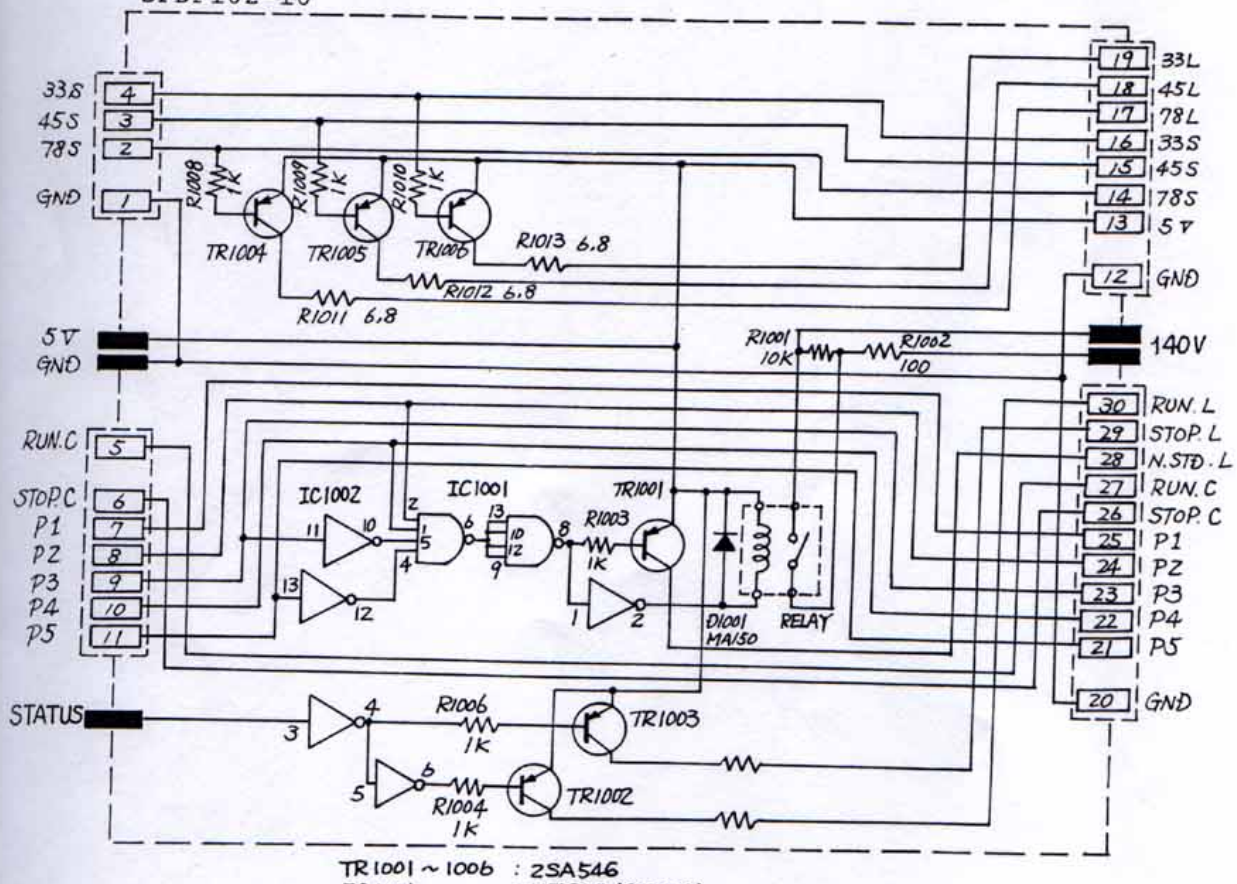

TR1001 ~ 1006 : 2SA546
IC 1001 : M53220 (SN7420)
IC 1002 : M53204 (SN7404)

Schematic Diagram

Pitch control circuit (SFDP102-09)

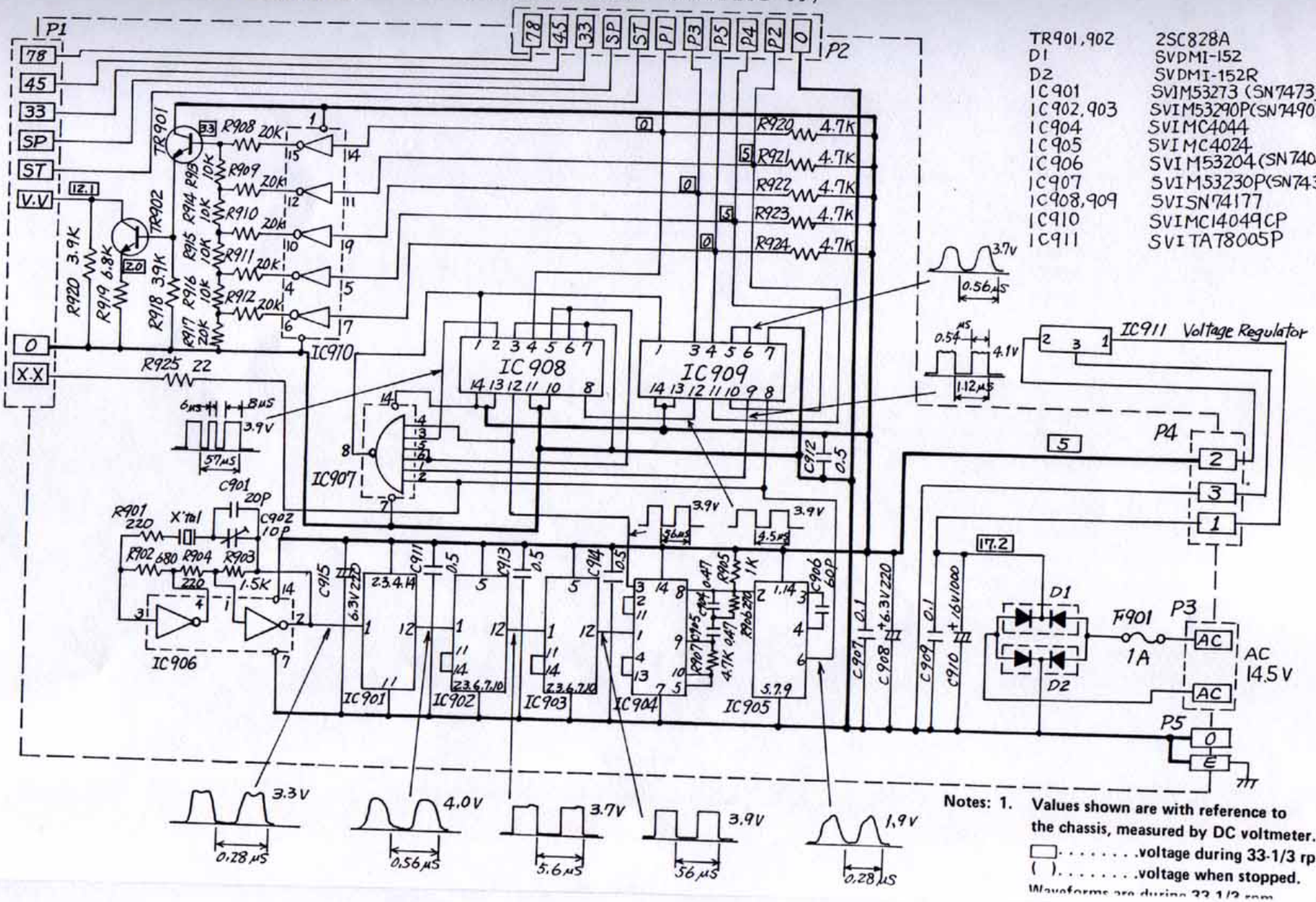

TR901,902	2SC828A
D1	SVDMI-152
D2	SVDMI-152R
IC901	SVIM53273 (SN7473)
IC902,903	SVIM53290P(SN7490)
IC904	SVIMC4044
IC905	SVIMC4024
IC906	SVIM53204(SN7404)
IC907	SVIM53230P(SN7430)
IC908,909	SVISN74177
IC910	SVIMC14049CP
IC911	SVITA78005P

Notes: 1. Values shown are with reference to the chassis, measured by DC voltmeter.

□.....voltage during 33-1/3 rpm.

( ).....voltage when stopped.

Waveforms are during 33-1/3 rpm.

Printed circuit board pattern seen from below.

Circuit Board Wiring View (Drive Circuit) SFDP102-02

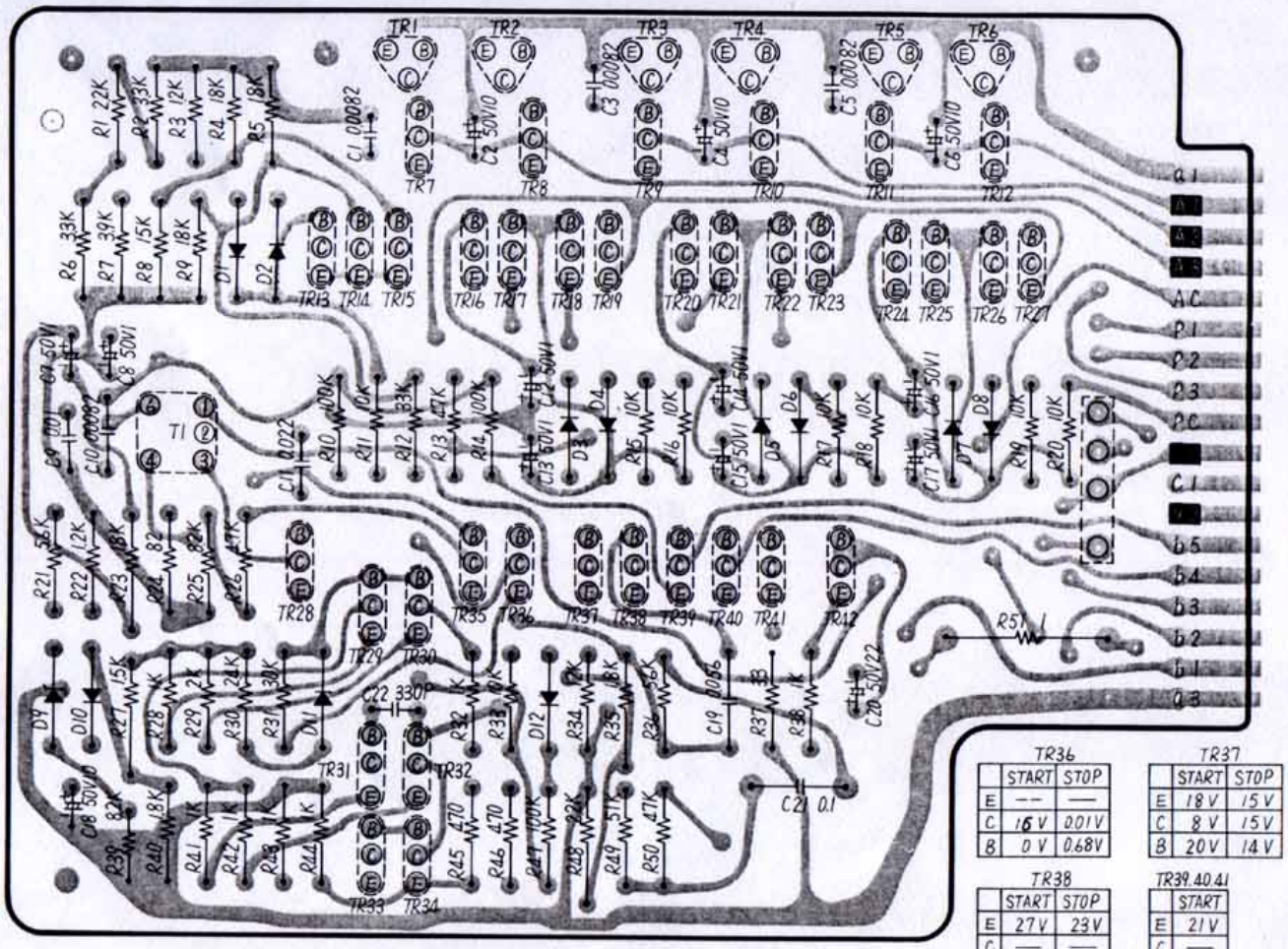

TR1.3.5

	START
E	32V
C	—
B	32V

TR7.9.11

	START
E	32V
C	—
B	31V

TR2.4.6

	START	STOP
E	0.02V	0V
C	—	23V
B	—	—

TR8.10.12

	START	STOP
E	—	-1.7V
C	—	23V
B	—	-1.5V

TR13

	START
E	16V
C	27V
B	17V

TR14

	START
E	16V
C	20V
B	16V

TR15

	START
E	16V
C	21V
B	15V

TR16.20

	START
E	20V
C	31V
B	20V

TR17.21

	START
E	21V
C	31V
B	21V

TR24

	START
E	20V
C	31V
B	20V

TR18.22

	START
E	17V
C	—
B	21V

TR19.23

	START
E	20V
C	—
B	20V

TR25

	START
E	21V
C	31V
B	—

TR28

	START
E	5.2V
C	—
B	5.8V

TR26

	START
E	17V
C	-1V
B	—

TR27

	START
E	17V
C	-1V
B	20V

TR29

	START
E	30V
C	27V
B	29V

TR30

	START
E	30V
C	3V
B	29V

TR31

	START
E	26V
C	17V
B	27V

TR33

	START
E	1V
C	17V
B	18V

TR32

	START	STOP
E	26V	—
C	20V	14V
B	27V	23V

TR36

	START	STOP
E	—	—
C	16V	0.01V
B	0V	0.68V

TR37

	START	STOP
E	18V	15V
C	8V	15V
B	20V	14V

TR34

	START
E	1.1V
C	20V
B	1.8V

TR42

	START
E	1.1V
C	1.8V
B	1.8V

TR38

	START	STOP
E	27V	23V
C	—	—
B	26V	22V

TR39.40.41

	START
E	21V
C	—
B	20V

TR35

	START
E	20V
C	—
B	18V

Circuit Board Wiring View (Control Circuit) SFDP102-04

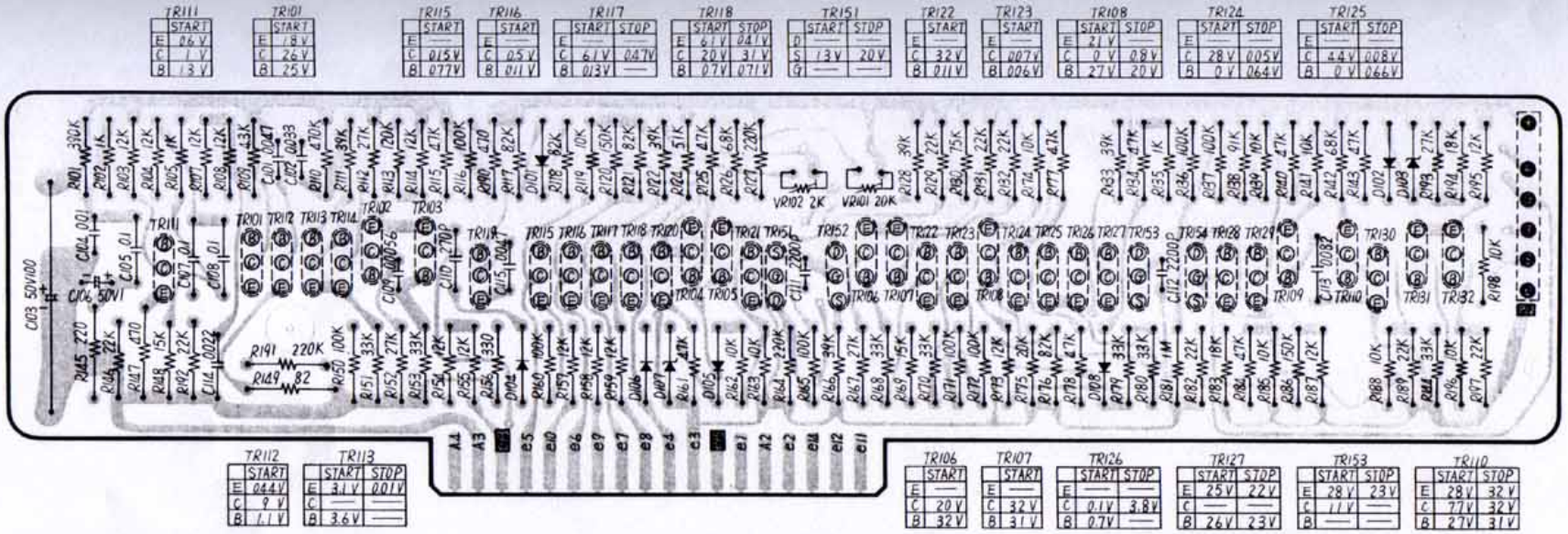

Circuit Board Wiring View (Connectional Circuit) SFDP102-01

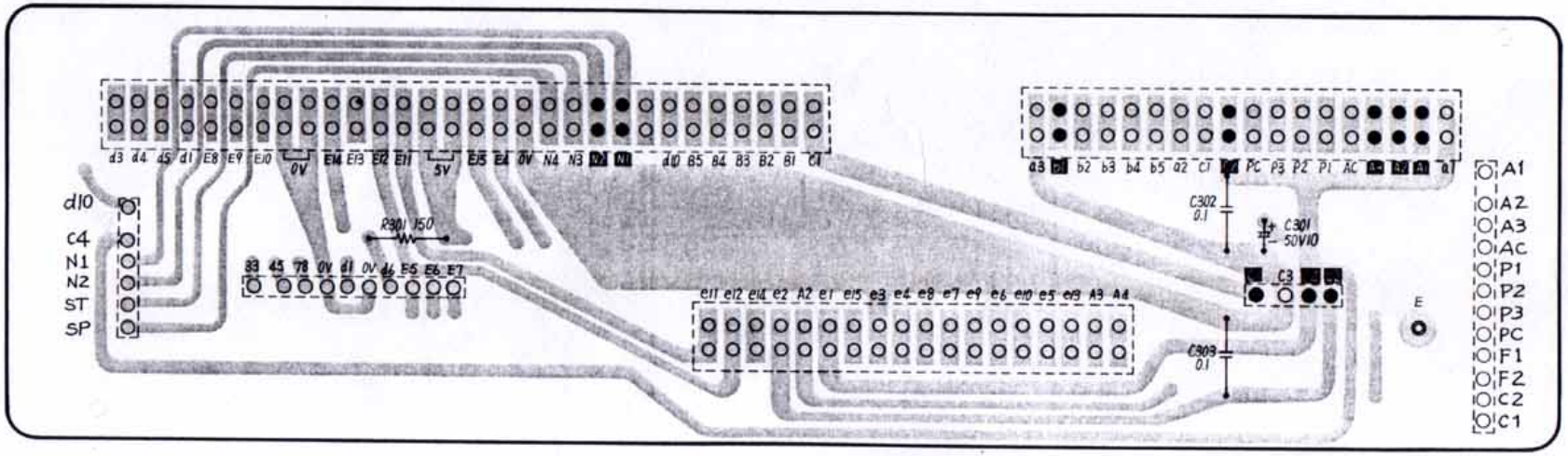

TR205	START
E	—
C	0.01V
B	—

TR209	START	STOP
E	—	—
C	1.2V	0.12V
B	0.03V	0.7V

TR210	START	STOP
E	—	—
C	1.2V	0.08V
B	0.21V	0.72V

TR211	START	STOP
E	—	—
C	2.6V	0.04V
B	0.21V	0.66V

TR212	START	STOP
E	—	—
C	6.7V	0.17V
B	0.21V	0.73V

TR213	START	STOP
E	—	—
C	3.2V	0.16V
B	0.21V	0.76V

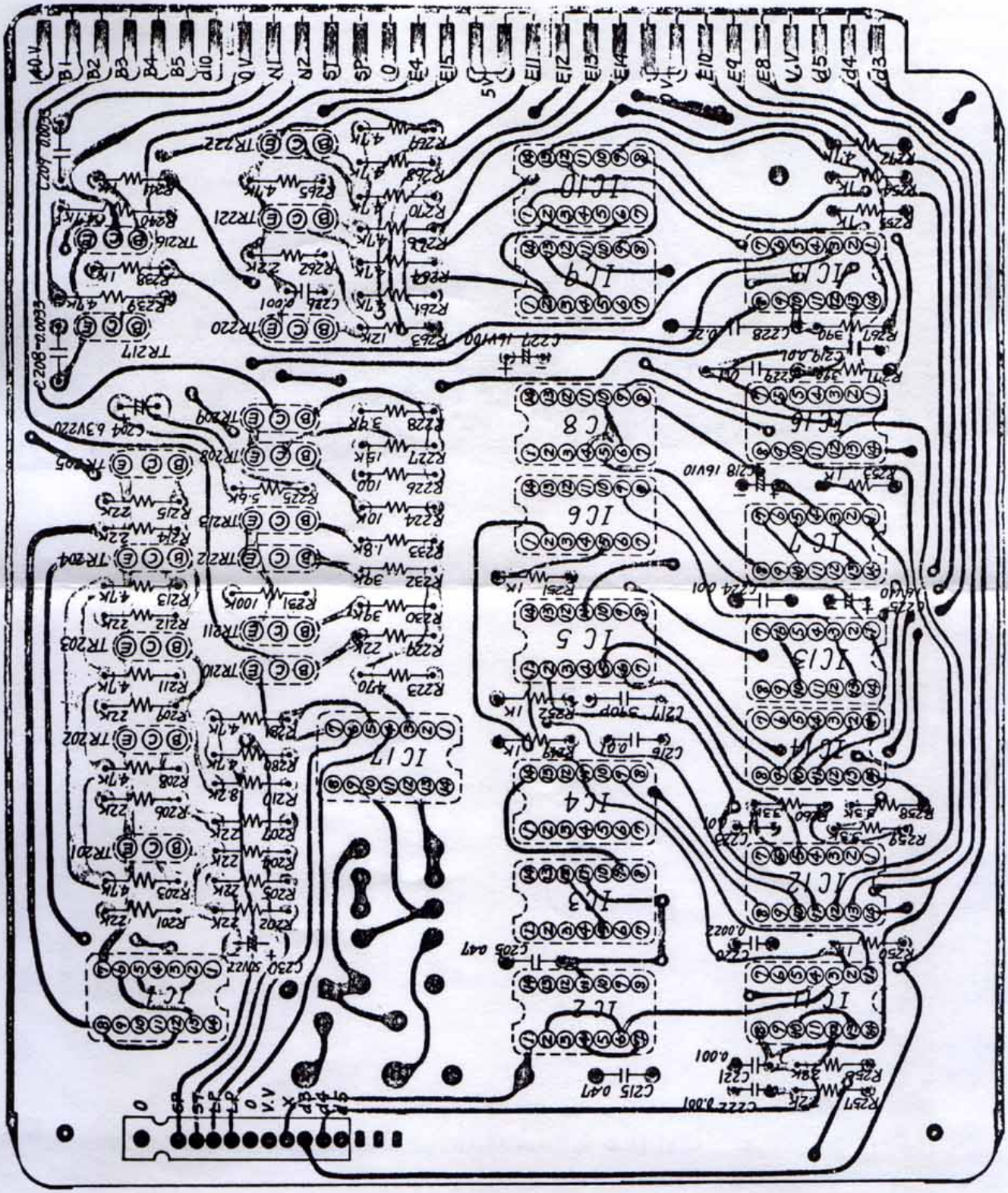

Circuit Board Wiring View (Control Center SH-10EP)

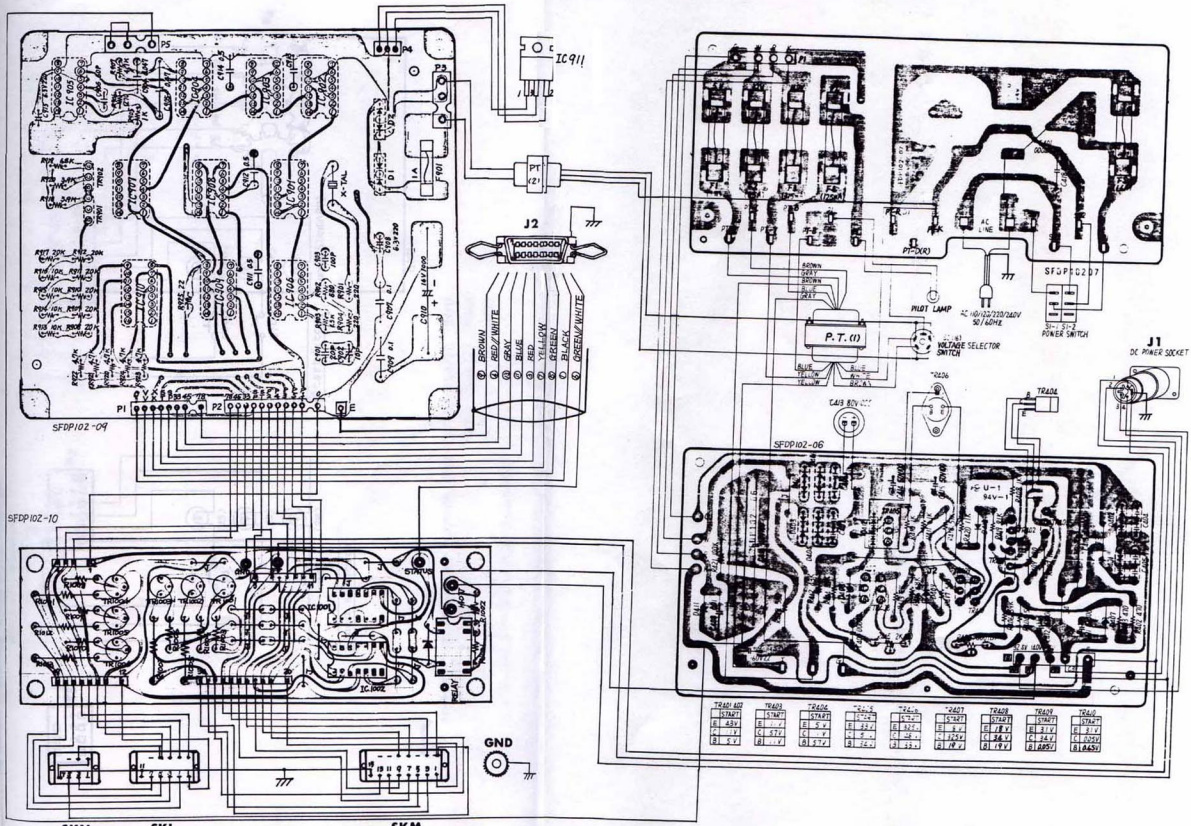

■ Remote function connecting diagram

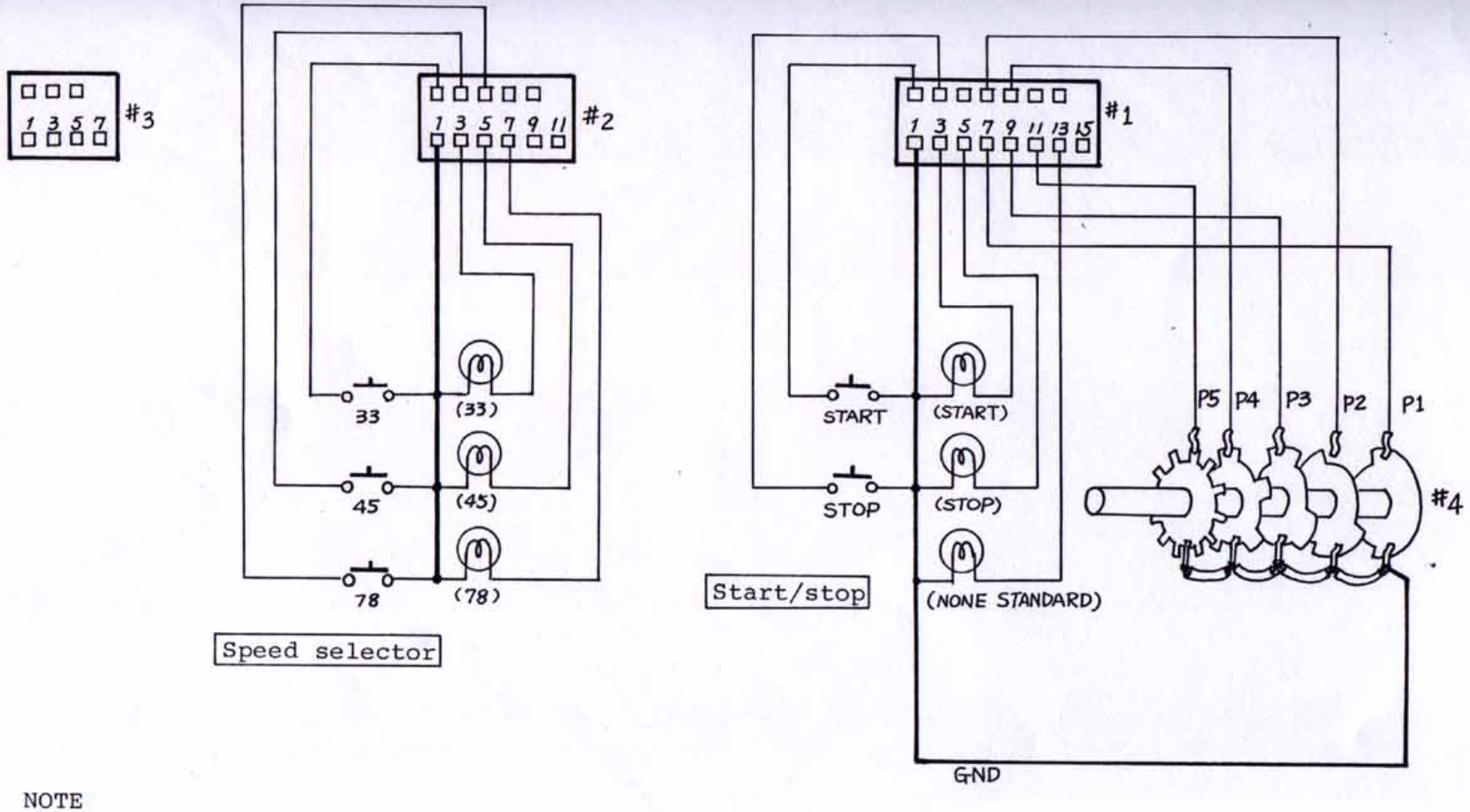

NOTE

#1) SOCKET,FIXED,15-POLE, PLESSEY TYPE 74/10/1558/10 (SKM)

#2) " , " ,11-POLE, " " 74/10/1158/10 (SKL)

#3) " , " , 7-POLE, " " 74/10/0758/10 (SKN)

#4) ROTARY SWITCH FOR PITCH ADJUSTING

BACKSIDE LINE VOLTAGE SELECTOR

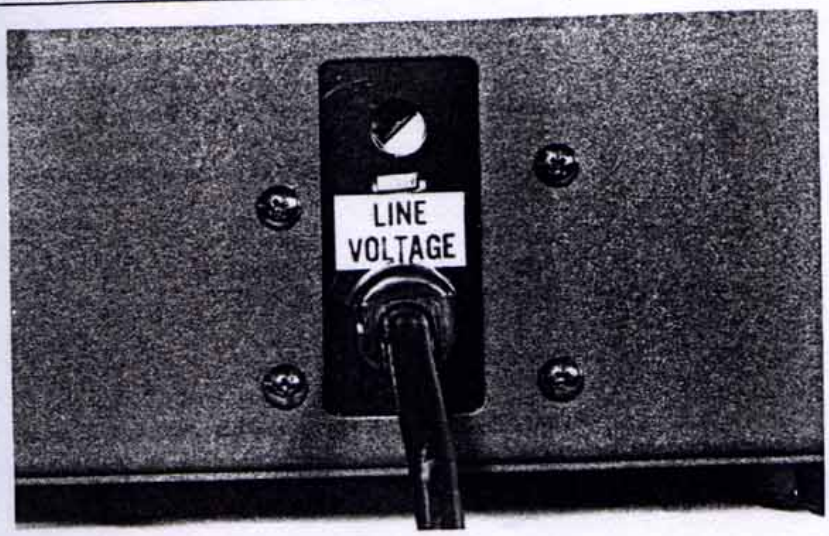

Line voltage can be selected variablely at 110V, 120V, 220V, and 240V.

This set is pre-adjusted to 240V.

When using a different line voltage, re-adjust the selector at correct line voltage rotating the adjusting screw.

Adjustment for Parts Replacement

[1] Quartz reference frequency adjustment (P.B. No. SFDP 102-11)

After changing the crystal (quartz), Capacitor(C1115, C1117) and R1108, readjust the oscillating frequency.

1 Connect the frequency counter at orend of R1140.

2 Set the pitch control switch to 0 %.

3 Turn the trimer C1117 in order to get 5.8368 MHz of indication.

[2] 50KHz Oscillation level adjustment (P.B. No. SFDP 102-02)

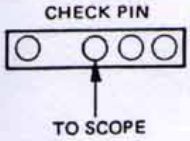

After changing transformer (T1), readjust oscillation level.

1 Connect the oscilloscope to check pin.

2 Turn the screw of T1 inorder to get 10Vp-p sine wave.

[3] Phase tracking period check and adjustment (P.B. No. SFDP 102-08)

In case of repairing the Drive Circuit board (SFDP 102-02) or Control Circuit board (SFDP 102-08) or Pitch Control board (SFDP 102-11) or Power Source board (SFDP 102-06), readjust and check the tracking period.

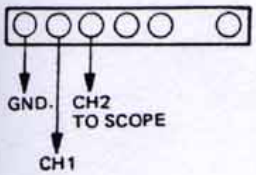

1.Connect a dual-channel oscilloscope to check point T and S on the Control Circuit board.

2.Adjust VR101 and VR102 refering the phase relation of two waves.

3.During the adjustment, turntable should be rotating.

4.Begin to make each adjustment from 33 to 45 and then 78 r.p.m..

Speed Selector	Time	Adjustment Point
33-1/3 r.p.m.	6.3 ± 0.2ms	VR101
45 r.p.m.	4.7 ± 1.3ms	Confirm
78 r.p.m.	2.7 ± 0.1ms	VR102

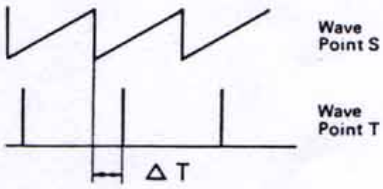

[4] Constant D.C. voltage adjustment (P.B. No. SFDP 102-06)

After changing the components on the board (SFDP 102-06), readjust the D.C. output level.

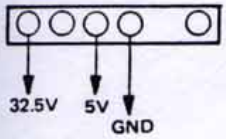

1. Connect a digital voltommeter at the point 5V.
2. Turn R405 in order to get 5.0V.
3. Connect the meter at the point 32.5V.
4. Turn R415 in order to get 32.5V.

Note:

In case of checking or adjusting the circuit board, please use the extension cable.

■ SERVICE CHECK POINTS

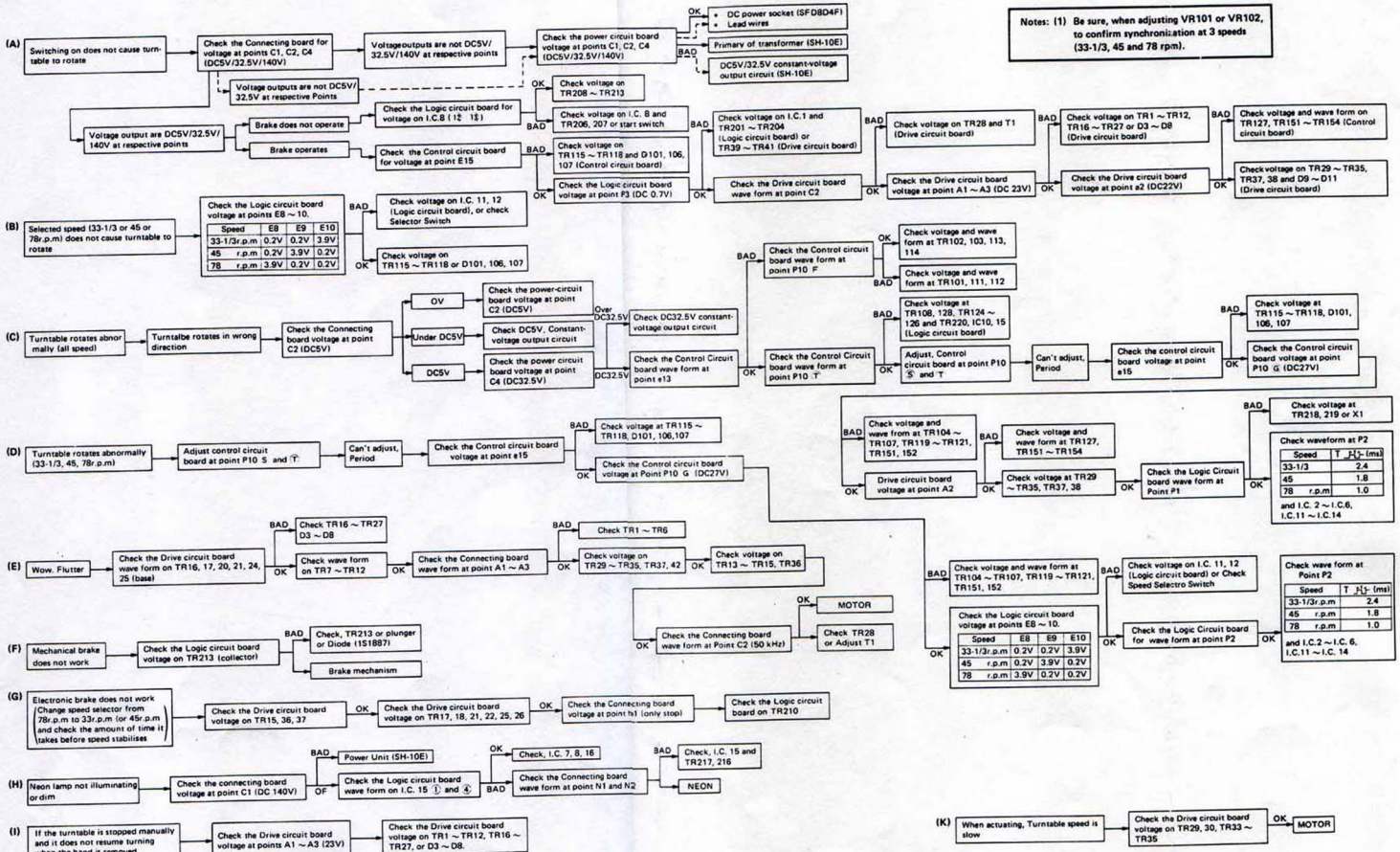

Exploded View of Turntable

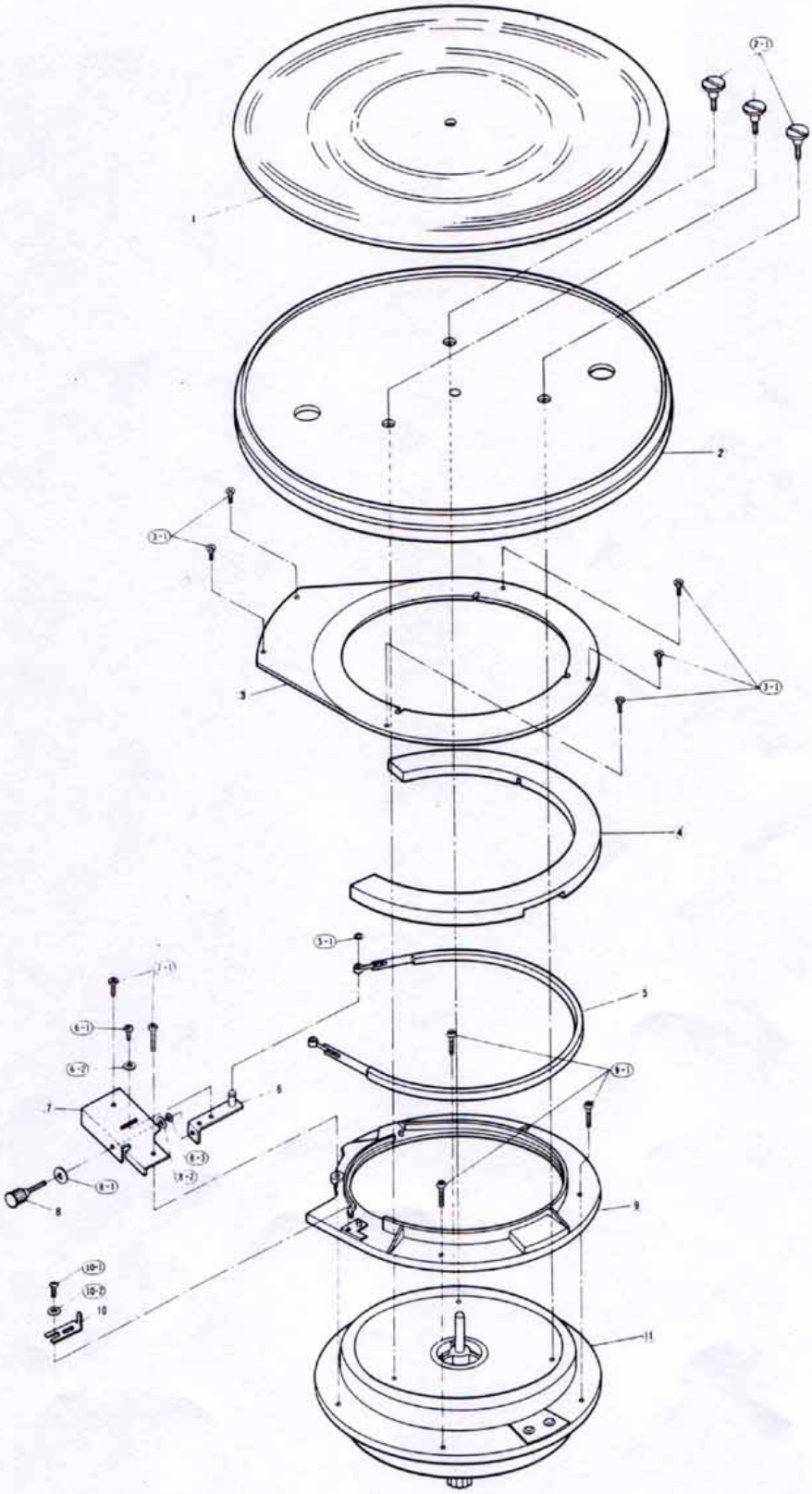

Exploded View of Turntable

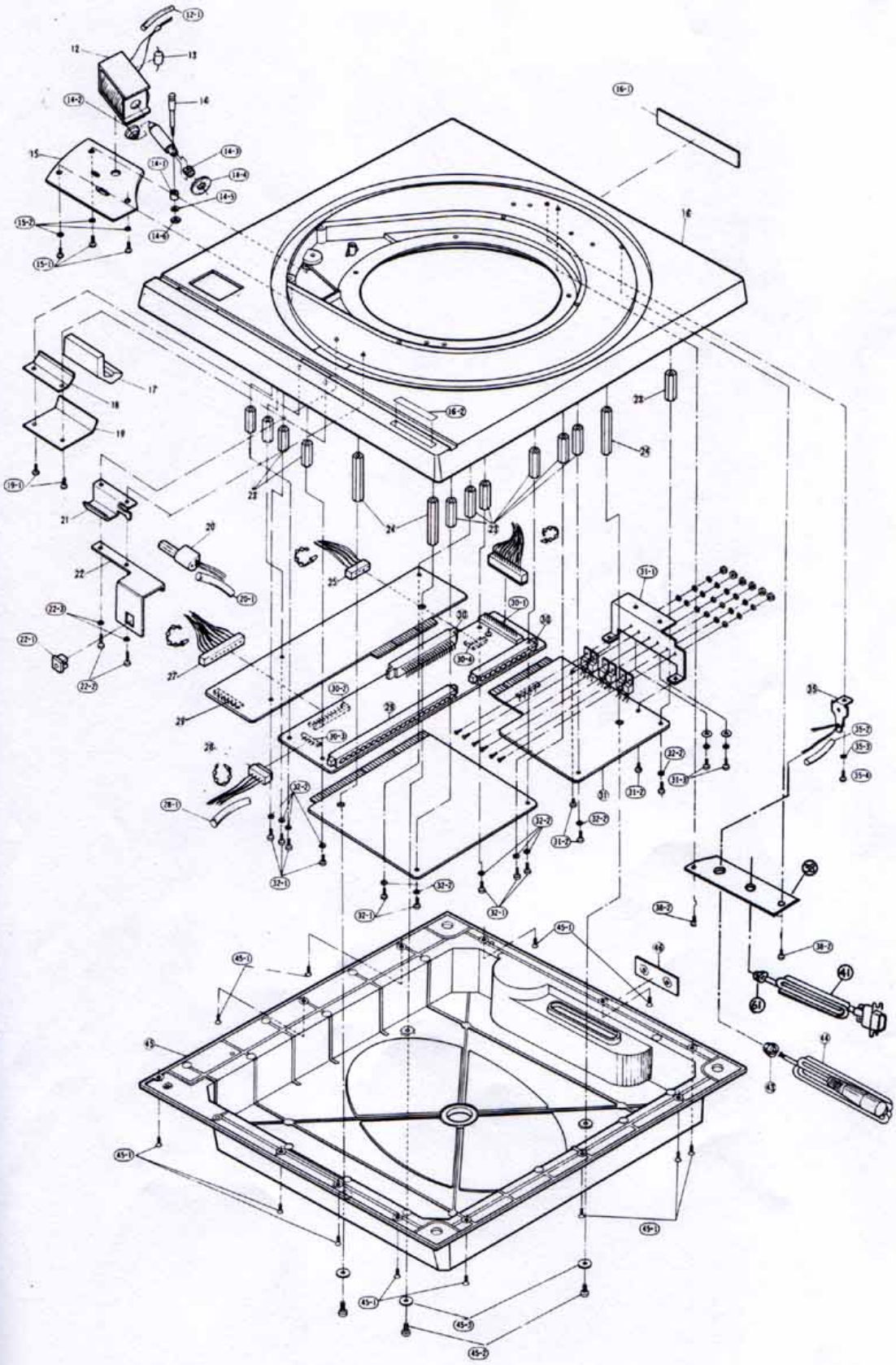

Exploded View of Turntable

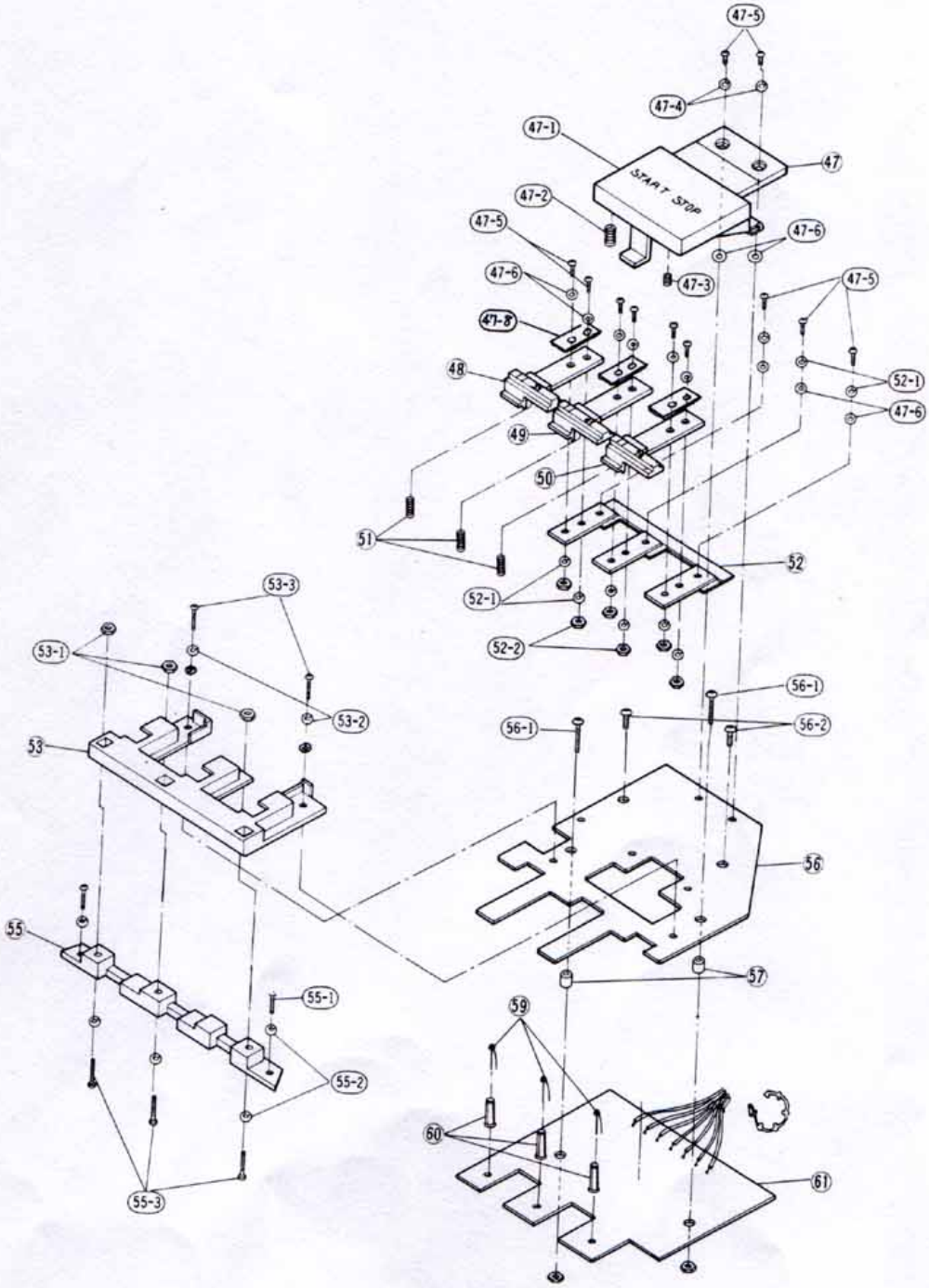

Exploded View of Control Center

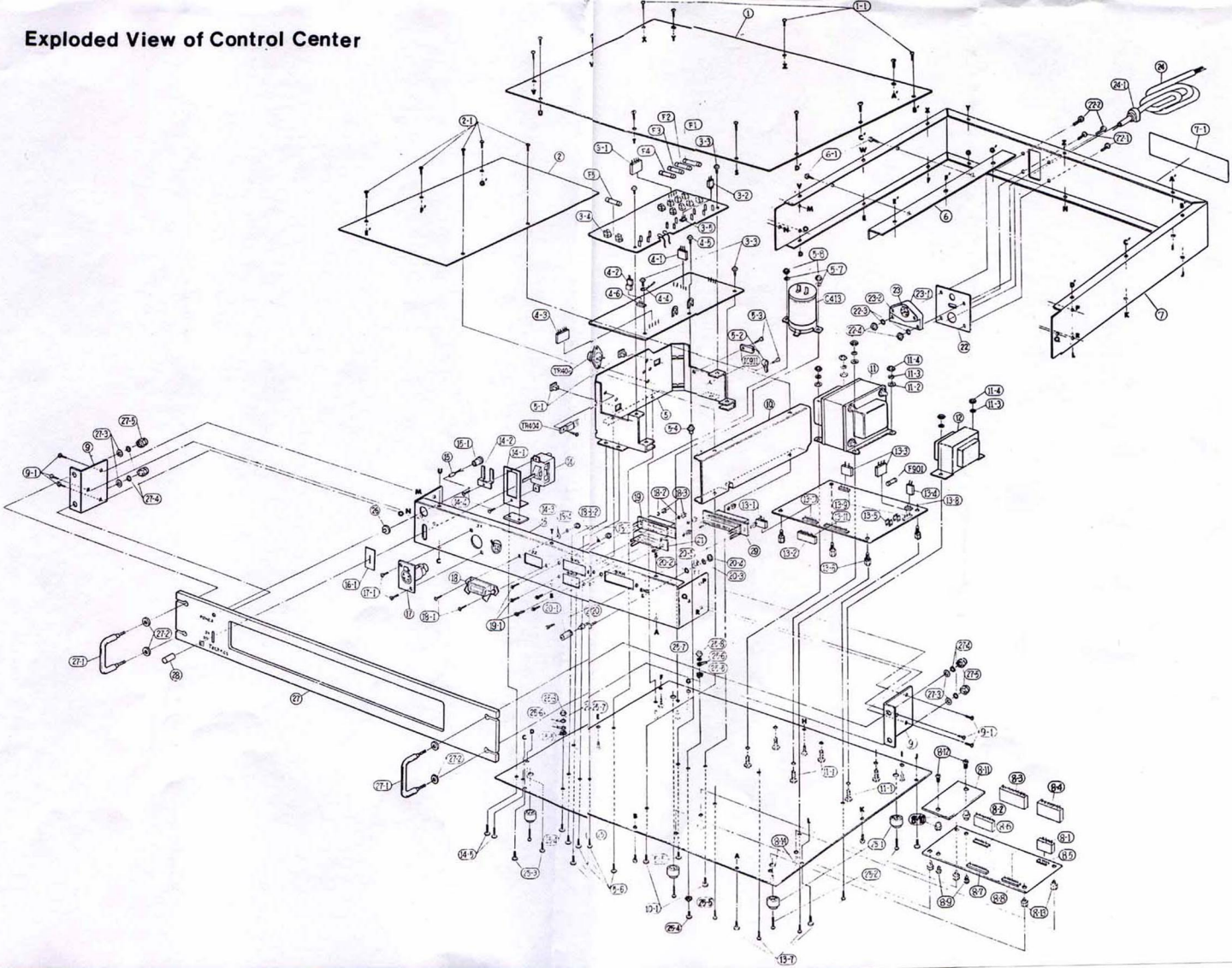

REPLACEMENT PARTS LIST

NOTES: 1. Part numbers are indicated on most mechanical parts.
Please use this part number for parts orders.
2. SAFETY Indicates, for safety reasons, that only parts specified in service manual be used for replacement.

Ref. No.	Part No.	Part Name & Description	Per Set	Remarks
		DRIVE CIRCUIT BOARD		
		Transistors		
TR1, 3, 5	2SB512-P	Transistors	3	
TR2, 4, 6	2SD390A-Q	Transistors	3	
TR7, 9, 11	2SA752-Q	Transistors	3	
TR8, 10, 12	2SC1384A-Q	Transistors	3	
TR13~17, 20, 21, 24, 25, 28 33~36, 42	2SC1328-T	Transistors	15	
TR18, 19, 22, 23, 27, 29~32, 37~41, 26	2SA666AI-R	Transistors	15	
		Diodes		
D1, 2, 10, 11	MA150	Diodes	4	
D3~8, 12	OA90	Diodes	7	
D9	SVDRD5.6ECS	Diode	1	
		Transformer		
T1	ELM10S123	Oscillator	1	
		Resistors		
R28, 38, 43, 44	ER050CKF1001	1KΩ 1/2W ± 1% Metallic	4	
R29	ER050CKF2001	2KΩ 1/2W ± 1% Metallic	1	
R51	ERX2ANJ1R0	1Ω 2W ± 5% Metallic	1	
R37	ERD12FJ3R3	3.3Ω 1/2W ± 5% Carbon	1	
R24	ERD12FJ820	82Ω 1/2W ± 5% Carbon	1	
R3, 22	ERD12FJ122	1.2KΩ 1/2W ± 5% Carbon	2	
R27	ERD50TJ152	1.5KΩ 1/2W ± 5% Carbon	1	
R23, 35, 40	ERD50TJ182	1.8KΩ 1/2W ± 5% Carbon	3	
R48	ERD50TJ222	2.2KΩ 1/2W ± 5% Carbon	1	
R1	ERD25TJ222	2.2KΩ 1/4W ± 5% Carbon	1	
R30	ERD25TJ242	2.4KΩ 1/4W ± 5% Carbon	1	
R2, 6	ERD25TJ332	3.3KΩ 1/4W ± 5% Carbon	2	
R7	ERD25TJ392	3.9KΩ 1/4W ± 5% Carbon	1	
R26	ERD25TJ472	4.7KΩ 1/4W ± 5% Carbon	1	
R21, 36	ERD25TJ562	5.6KΩ 1/4W ± 5% Carbon	2	
R45, 46	ERD25TJ471	470Ω 1/4W ± 5% Carbon	2	
R32, 41, 42	ERD25TJ102	1KΩ 1/4W ± 5% Carbon	3	
R25, 39	ERD25TJ822	8.2KΩ 1/4W ± 5% Carbon	2	
R11, 15, 16, 17 18, 19, 20, 33	ERD25TJ103	10KΩ 1/4W ± 5% Carbon	8	
R34	ERD25TJ123	12KΩ 1/4W ± 5% Carbon	1	
R8	ERD25TJ153	15KΩ 1/4W ± 5% Carbon	1	
R4, 5, 9	ERD25TJ183	18KΩ 1/4W ± 5% Carbon	3	
R31	ERD25TJ303	30KΩ 1/4W ± 5% Carbon	1	
R12	ERD25TJ333	33KΩ 1/4W ± 5% Carbon	1	
R13, 50	ERD25TJ473	47KΩ 1/4W ± 5% Carbon	2	
R49	ERD25TJ513	51KΩ 1/4W ± 5% Carbon	1	
R10, 14, 47	ERD25TJ104	100KΩ 1/4W ± 5% Carbon	3	
		Capacitors		
C22	ECQS1331K	330pF 125WV ±10% Styrol	1	
C1, 3, 5, 10	ECQM05822KZ	0.0082pF 50WV ±10% Polyester	4	
C9	ECQM05103KZ	0.01μF 50WV ±10% Polyester	1	
C11	ECQM05223KZ	0.022μF 50WV ±10% Polyester	1	
C19	ECQM05563KZ	0.056μF 50WV ±10% Polyester	1	
C21	ECQM05104KZ	0.1μF 50WV ±10% Polyester	1	
C7, 8, 12, 13, 14 15, 16, 17	ECEA50V1	1μF 50WV Electrolytic	8	
C20	ECEA50V2R2	2.2μF 50WV Electrolytic	1	
C2, 4, 6, 18	ECEA50V10	10μF 50WV Electrolytic	4	
		LOGIC CIRCUIT BOARD		
		Intergrated Circuits		
IC 14, 15, 17	SVIM53200P	Intergrated Circuit	3	
IC 2, 3, 5, 7, 8, 9, 10	SVIM53273P	Intergrated Circuit	7	
IC 4, 6	SVIM53293P	Intergrated Circuit	2	
IC11	SVIM5946P	Intergrated Circuit	1	
IC12	SVIM53204P	Intergrated Circuit	1	
IC13, 16	SVIM53210P	Intergrated Circuit	2	
		Transistors		
TR201~205 218~212 220~222	2SC1328-T	Transistors	13	
TR216, 217	2SC1573-Q	Transistors	2	
TR213	2SC1384A-Q	Transistor	1	
		Resistors		
R 226	ERD25TJ101	100Ω 1/4W ± 5% Carbon	1	
R267, 271	ERD25TJ391	390Ω 1/4W ± 5% Carbon	2	
R223,	ERD25TJ471	470Ω 1/4W ± 5% Carbon	1	
R246	ERD25TJ821	820Ω 1/4W ± 5% Carbon	1	
R238, 241, 250, 251 252, 253, 254, 255	ERD25TJ102	1KΩ 1/4W ± 5% Carbon	9	
R233	ERD25TJ182	1.8KΩ 1/4W ± 5% Carbon	1	
R214, 256, 257, 262	ERD25TJ222	2.2KΩ 1/4W ± 5% Carbon	4	
R258, 259, 260	ERD25TJ332	3.3KΩ 1/4W ± 5% Carbon	3	
R228	ERD25TJ392	3.9KΩ 1/4W ± 5% Carbon	1	
R203, 208, 211, 213, 280, 281, 261, 264, 265, 266, 268, 269, 270, 272	ERD25TJ472	4.7KΩ 1/4W ± 5% Carbon	14	
R225	ERD25TJ562	5.6KΩ 1/4W ± 5% Carbon	1	
R210	ERD25TJ822	8.2KΩ 1/4W ± 5% Carbon	1	
R224	ERD25TJ103	10KΩ 1/4W ± 5% Carbon	1	
R263	ERD25TJ123	12KΩ 1/4W ± 5% Carbon	1	
R227	ERD25TJ153	15KΩ 1/4W ± 5% Carbon	1	
R201, 202, 204 ~207, 209, 212, 215, 229,	ERD25TJ223	22KΩ 1/4W ± 5% Carbon	10	
R230, 232	ERD25TJ393	39KΩ 1/4W ± 5% Carbon	2	
R231, 247	ERD25TJ104	100KΩ 1/4W ± 5% Carbon	1	
R239, 240	ERG1ANJ472	4.7KΩ 1W ± 5% Metallic	2	
		Capacitors		
C226 221, 222,	ECQM05102KZ	0.001μF 50WV ±10% Polyester	3	

Ref. No.	Part No.	Part Name & Description				Per Set	Remarks
C220	ECQM05222KZ	0.0022μF	50WV	±10%	Polyester	1	
C223, 224 219,	ECQM05103KZ	0.01μF	50WV	±10%	Polyester	3	
C215, 205, 216	ECC D1H104K	0.1μF	12 WV	±10%	Ceramic	3	
C228	ECQM05224KZ	0.22μF	50WV	±10%	Pulyester	1	
C229	ECQM05823KZ	0.082μF	50WV	±10%	Polyester	1	
C208, 209	ECQM2332KZ	0.0033μF	50WV	±10%	Polyester	2	
C217	ECQS1391K	390pF	125WV	±10%	Styrol	1	
C230	**ECEA50V2R2**	2.2μF	50WV		Electrolytic	1	
C202, 218, 225,	**ECEA16V10**	10μF	16WV		Electrolytic	3	
C227	**ECEA16V100**	100μF	16WV		Electrolytic	1	
C204	**ECEA10V330V**	330μF	10WV		Electrolytic	1	
CONTROL CIRCUIT BOARD							
Transistors							
TR101, 113~130	**2SC1328-T**	Transistors				18	
TR102~108, 110, 131, 132,	**2SA666AI-R**	Transistors				10	
TR109	**2SA666AI-R**	Transistor				1	
TR111, 112, 120.	**2SC1328-T**	Transistors				3	
TR151~154	2SK30A-Y	Transistors				4	
Diodes							
D101, 102, 104, 105, , 108	MA150	Diodes				5	
D103	SVDRD9.1EBS	Diode				1	
D107	SVDRD5.6ECS	Diode				1	
D106	MA26W	Diode				1	
Resistors							
R121	ERO25CKD8201	8.2KΩ	1/4W	± 5%	Metallic	1	
R119	ERO25CKD1002	10KΩ	1/4W	± 5%	Metallic	1	
R174	ERO25CKF1002	10KΩ	1/4W	± 1%	Metallic	1	
R175	ERO25CKF2002	20KΩ	1/4W	± 1%	Metallic	1	
R149	**ERD12FJ820**	82 Ω	1/2W	± 5%	Carbon	1	
R145	**ERD12FJ221**	220Ω	1/2W	± 5%	Carbon	1	
R156	**ERD12FJ331**	330Ω	1/2W	± 5%	Carbon	1	
R147	**ERD12FJ471**	470Ω	1/2W	± 5%	Carbon	1	
R192	**ERD25TJ222**	2.2KΩ	1/2W	± 5%	Carbon	1	
R144	**ERD25TJ332**	3.3KΩ	1/4W	± 5%	Carbon	1	
R122, 166	**ERD25TJ392**	3.9KΩ	1/4W	± 5%	Carbon	2	
R115	**ERD25TJ472**	4.7KΩ	1/4W	± 5%	Carbon	1	
R124	**ERD25TJ512**	5.1KΩ	1/4W	± 5%	Carbon	1	
R130	**ERD25TJ752**	7.5KΩ	1/4W	± 5%	Carbon	1	
R190	**ERD25TJ471**	470Ω	1/4W	± 5%	Carbon	1	
R102, 105, 135	**ERD25TJ102**	1KΩ	1/4W	± 5%	Carbon	3	
R131, 132	**ERD25TJ222**	2.2KΩ	1/4W	± 5%	Carbon	3	
R151	**ERD25TJ332**	3.3KΩ	1/4W	± 5%	Carbon	1	
R134, 177, 178, 184	**ERD25TJ472**	4.7KΩ	1/4W	± 5%	Carbon	4	
R117, 118, 176	**ERD25TJ822**	8.2KΩ	1/4W	± 5%	Carbon	3	

Ref. No.	Part No.	Part Name & Description				Per Set	Remarks
R139, 141, 162, 163, 185, 188, 196, 198	**ERD25TJ103**	10KΩ	1/4W	± 5%	Carbon	8	
R103, 104, 107, 108, 114, 154, 155, 157, 158, 159, 173, 187, 195	**ERD25TJ123**	12KΩ	1/4W	± 5%	Carbon	13	
R148, 169	**ERD25TJ153**	15KΩ	1/4W	± 5%	Carbon	2	
R183, 194	**ERD25TJ183**	18KΩ	1/4W	± 5%	Carbon	2	
R129, 146, 182, 189, 197	**ERD25TJ223**	22KΩ	1/4W	± 5%	Carbon	5	
R112, 152, 167, 193	**ERD25TJ273**	27KΩ	1/4W	± 5%	Carbon	4	
R153, 168, 170, 179, 180	**ERD25TJ333**	33KΩ	1/4W	± 5%	Carbon	5	
R111, 128, 133	**ERD25TJ393**	39KΩ	1/4W	± 5%	Carbon	3	
R125, 140, 143, 161	**ERD25TJ473**	47KΩ	1/4W	± 5%	Carbon	4	
R 142	**ERD25TJ683**	68KΩ	1/4W	± 5%	Carbon	2	
R109	**ERD25TJ432**	4.3KΩ	1/4W	± 5%	Carbon	1	
R138	**ERD25TJ913**	91KΩ	1/4W	± 5%	Carbon	1	
R116, 136, 137, 150, 160, 165, 171, 172	**ERD25TJ104**	100KΩ	1/4W	± 5%	Carbon	8	
R113	**ERD25TJ124**	120KΩ	1/4W	± 5%	Carbon	1	
R120, 186	**ERD25TJ154**	150KΩ	1/4W	± 5%	Carbon	2	
R127, 164, 191	**ERD25TJ224**	220KΩ	1/4W	± 5%	Carbon	3	
R101	**ERD25TJ394**	390KΩ	1/4W	± 5%	Carbon	1	
R110	**ERD25TJ474**	470KΩ	1/4W	± 5%	Carbon	1	
R181	**ERD25TJ105**	1MΩ	1/4W	± 5%	Carbon	1	
R126	ERD25TJ823	82KΩ	1/4W	± 5%	Carbon	1	
Variable Resistor							
VR101	**EVSPIAA00E24**	20KΩ				1	
VR102	**EVSPIAA00E23**	2KΩ				1	
Capacitor							
C110	ECQS1271K	270pF	125W	±10%	Styrol	1	
C111, 112	ECQS1222KZ	2200pF	125W	±10%	Styrol	2	
C109	ECQM05562KZ	0.0056μF	50W	±10%	Polyester	1	
C104	ECQM05103KZ	0.01μF	50W	±10%	Polyester	1	
C114	ECQM05223KZ	0.022μF	50W	±10%	Polyester	1	
C102	ECQM05333KZ	0.033μF	50W	±10%	Polyester	1	
C101, 115	ECQM05473KZ	0.047μF	50W	±10%	Polyester	2	
C113	ECQM05823KZ	0.082μF	50W	±10%	Polyester	1	
C105, 107, 108	ECQM05104KZ	0.1μF	50W	±10%	Polyester	3	
C106	**ECEA50V1**	1μF	50W		Electrolytic	1	
C103	**ECEB63V100**	100μF	50W		Electrolytic	1	
CONNECTIONAL BOARD							
R302, 303, 304	**ERD25TJ151**	150Ω	1/4W	± 5%	Carbon	3	
C301	**ECEA50V10**	10μF	50W		Electrolytic	1	
C302, 303	ECQM05104KZ	0.1μF	50W	±10%	Polyester	2	

CABINET AND CHASSIS PARTS

Ref. No.	Part No.	Part Name & Description	Per Set		Remarks
1	SFTG102-01	Turntable mat	1		
2	SFTE102-01E	Turntable	1		
2-1	SFXJ102-08E	Screw, Turntable	3		
3	SFUP102-06	Cover, Brake	1		
3-1	XSS3+8FZS	Screw, Cover	5		
4	SFTG102-03	Rubber, Brakecover	1		
5	SFUP102-09A	Brake, Band	1		
5-1	XUC3FT	Circlip, Brake band	2		
6	SFUP102-05E	Plate, Brake	1		
6-1	XYN3+C8FZS	Screw, Plate	1		
6-2	SFXW120-01	Washer, Plate	1		
7	SFUP102-07	Plate, Adjustment	1		
7-1	XYN3+C6FZS	Screw, Plate	1		
8	SFXJ102-02	Screw, Adjustment	1		
8-1	SFXW303-1	Washer	1		
8-2	SFPEW12002	Washer	1		
8-3	XUC4FT	Circlip, Screw Adjustment	1		
9	SFUM102-01	Brake Hausing	1		
9-1	XYN4+C15FZS	Screw	3		
9-2	XYN4+C18FZS	Screw	1		
10	SFUP102-15	Plate, Brake Adjustment	1		
10-1	XTV3+8BFZ	Screw, Adjustment Plate	1		
10-2	SFXW120-01	Washer, Adjustment Plate	1		
11	SFMZ102-01E	Motor Ass'y	1		
12	SFDZSD1AC10	Plunger	1		
12-1	SFEB3UT	Tube	1		
12-2	SFXW120-01	Washer, Plunger	2		
12-3	XYN3+C5FZS	Screw, Plunger	2		
13	SVD1S1887	Diode	1		
14	SFXJ102-03	Lever, Plunger	1		
14-1	SFXO102-01	Spacer, Plunger	1		
14-2	SFQA102-01	Spring, Brake	1		
14-3	SFGH102-01	Rubber Plunger	1		
14-4	SFGH102-02	Rubber Washer	1		
14-5	XWA3BFR	Washer	1		
14-5	XNG3BS	Nut	1		
14-7	SFXW880-1	Washer	1		
14-8	SFXW102-02	Washer	1		
15	SFUP102-12	Mounting Plate, Plunger	1		
15-1	XYN3+C6FZS	Screw, Mounting Plate	3		
16	SFAC102-01	Panel Case	1		
16-1	SFNN102P01	Name Plate	1		
16-2	SFKB102X01	Badge	1		
17	SFUM102-02	Neon lamp base, A	1		
19	SFUP102-02	Neon lamp base, C	1		
19-1	XYN3+C6FZS	Screw, Neon lamp base	2		
20	SFDNNL78WM	Neon lamp	1		
20-1	SFEB3UT	Tube	1		
21	SFUP102-08	Holder, Neon lamp	1		
22	SFUP102-17	Holder, P.C.B.	1		
22-1	SFEZ196	Spacer, P.C.B.	1		
22-2	XYN3+C8FZS	Screw	2		
23	SFXJ102-05	Spacer, P.C.B.	11		
23-1	XWA3BFR	Washer	1		
24	SFXJ102-04	Spacer, Bottom Case	3		
25	SFDJ12804S	Connector, 4P	1		
26	SFDJXI53242	Connector	1		
27	SFDJ12810S	Connector, 10P	1		
28	SFDJ12804S	Connector, 4P	1		
29	SFDJXI53250	Connector	1		
30	SFDJXI53241	Connector	1		
30-1	SFDJ12812P	Connector, 12P	1		

Ref. No.	Part No.	Part Name & Description	Per Set		Remarker
30-2	SFDJ12910P	Connector, 10P	1		
30-3	SFDJ12906P	Connector, 6P	1		
30-4	SFDJ12904P	Connector, 4P	1		
30-5	SFDJ5048-14-A	Connector, 14P	1		
30-6	SFDJ5047-14	Connector, 14P	1		
31-1	SFUP102-11	Plate, Heat sink	1		
31-2	XSN3+6S	Screw	2		
31-3	XYN3+C8FZS	Screw	2		
31-4	SFXW120-01	Washer	2		
35	SFER1E	Mounting, Ground Wire	1		
35-2	SFEB3UT	Tube	1		
35-4	XYN3+C6FZS	Screw	1		
38	SFUP102P03	Mounting Plate, Cord	1		
38-2	XYN3+C8FZS	Screw	2		
41	SFDJ10EP05E	Plug B	1		
43	SFSR5N4	Bushing, cord	1		
44	SFDJ102P01E	Plug, A	1		
45	SFAU102-01	Bottom Case	1		
45-1	XSS3+8FZS	Screw	13		
45-2	XYN3+C8FZS	Screw	3		
45-3	SFXW120-01	Washer	3		
45-4	SFGK102-01	Rubber Cap	1		
45-5	SFUZ102-03	Felt	4		
47	SFKT102-01	Plate, start stop Switch	1		
47-1	SFKK102-01	Ornament, start stop switch	1		
47-2	SFQA102-03	Spring, start stop switch	1		
47-4	XWA2BFR	Washer	5		
47-5	XSN2+6	Screw	5		
47-6	XWE2C4BN	Washer	11		
47-7	XSN2+8	Screw	6		
47-8	SFUP102-18	Plate	3		
48	SFKT102-02E	Plate, Select 33	1		
49	SFKT102-03E	Plate, Select 45	1		
50	SFKT102-04E	Plate, Select 78	1		
51	SFQA102-02	Spring, Select Switch	3		
52	SFUM102-05	Mounting Plate, Switch	1		
52-1	XWA2BFR	Washer	6		
52-2	XNG2HBW	Nut	6		
53	SFUM102-06	Switch cover	1		
53-1	XNG2HBW	Nut	4		
53-2	XWA2BFR	Washer	2		
53-3	XSN2+6	Screw	2		
53-4	XWE2C4BN	Washer	2		
55	SFUM102-07	Switch cover	1		
55-1	XYN3+C6FZS	Screw	2		
55-2	XBA2BFR	Washer	4		
55-3	XSN2+10	Screw	4		
56	SFUP102-04	Mounting Plate, Select Switch	1		
56-1	XYN3+C10FZS	Screw	2		
56-2	XYN3+C6FZS	Screw	2		
56-3	XNG3BS	Nut	2		
57	SFXO102-02	Spacer	2		
59	LN22	Light Emitting Diode	3		
60	SFUM102-04	Holder, Diode	3		
61	SFSR6N-4	Bushing, Cord	1		
CONTROL CENTER (Model SH-10EP-XGE)					
Integrated Circuits					
IC901	SVIM53273P		1		
IC902, 903	SVISN7490AN		2		
IC904	SVIMC4044P		1		
IC905	SVIMC4024P		1		

Ref. No.	Part No.	Part Name & Description	Per Set	Remarks
IC906	SVIM53204P		1	
IC907	SVIM53230P		1	
IC908, 909	SVISN74177N		2	
IC910	SVIMC14049CP		1	
IC911	SVITA78005P		1	
IC1001	SVIM53220		1	
IC1002	SVIM53204		1	
		Transistors		
TR401, 402, 407	2SC1328-T		6	
TR408, 409, 410				
TR403	2SA666AI-R		1	
TR404	2SD389A-Q		1	
TR405	2SD389A-Q		1	
TR406	2SD334		1	
TR901, 902	2SC1328-T		2	
TR1001 ~ 1006	2SA966-E		6	
		Diodes		
D401, 403, 404	RVD10DC2		3	Safety
D402, 405, 406	RVD10DC2R		3	Safety
D407	SVDRD5.6ECS		1	
D408	SVDRD16EB		1	
D409, D1001	MA150		2	
D410	OA90		1	
D411	SVD1S1887		1	
D412	SVDSV05		1	
D1	RVD10DC2		1	Safety
D2	RVD10DC2R		1	Safety
		Xtal		
X1	TSS-616-K	3.5796MHz	1	
		Variable Resistors		
R405	EVLS0AA00B52	500Ω	1	
R415	EVLS0AA00B23	2KΩ	1	
		Resistors		
R402, 403	ERD25TJ471	470Ω 1/4W ± 5% Carbon	2	
R404	ERD25TJ561	560Ω 1/4W ± 5% Carbon	1	
R406	ERD25TJ392	3.9KΩ 1/4W ± 5% Carbon	1	
R407, 408, 1003	ERD25TJ102	1KΩ 1/4W ± 5% Carbon	8	
R409, 1004	ERD25TJ681	680Ω 1/4W ± 5% Carbon	1	
R410, 1006	ERD25FJ102	1KΩ 1/2W ± 5% Carbon	1	
R411, 1008	ERD25TJ512	5.1KΩ 1/4W ± 5% Carbon	1	
R412, 1009, 1010	ERD25TJ432	4.3KΩ 1/4W ± 5% Carbon	1	
R413	ERD50TJ202	2KΩ 1/2W ± 5% Carbon	1	
R414	ERD25TJ392	3.9KΩ 1/4W ± 5% Carbon	1	
R416	ERD25TJ682	6.8KΩ 1/4W ± 5% Carbon	1	
R417, 418	ERD12FJ561	560Ω 1/2W ± 5% Carbon	2	
R419	ERD25TJ513	51KΩ 1/4W ± 5% Carbon	1	
R420	ERD25TJ912	9.1KΩ 1/4W ± 5% Carbon	1	
R421	ERD25TJ104	100KΩ 1/4W ± 5% Carbon	1	
R901, 904	ERD25TJ221	220Ω 1/4W ± 5% Carbon	2	
R902	ERD25TJ681	680Ω 1/4W ± 5% Carbon	1	
R903	ERD25TJ152	1.5KΩ 1/4W ± 5% Carbon	1	
R905, 1002	ERD25TJ101	100Ω 1/4W ± 5% Carbon	2	

Ref. No.	Part No.	Part Name & Description	Per Set	Remarks
R906	ERD25TJ271	270Ω 1/4W ± 5% Carbon	1	
R907, 921, 922, 923	ERD25TJ472	4.7KΩ 1/4W ± 5% Carbon	4	
R908, 909, 910 911, 912, 917	ERD25TJ203	20KΩ 1/4W ± 5% Carbon	6	
R913, 914, 915, 916, 1001	ERD25TJ103	10KΩ 1/4W ± 5% Carbon	5	
R918, 920	ERD25TJ392	3.9KΩ 1/4W ± 5% Carbon	2	
R919	ERD25TJ101	100Ω 1/4W ± 5% Carbon	1	
R924	ERD25TJ220	22Ω 1/4W ± 5% Carbon	1	
R1005	ERX2ANJP3R3S	3.3Ω 2W ± 5% Metallic	1	
R1007, 1011 1012, 1013	ERX2ANJP6R8S	6.8Ω 2W ± 5% Metallic	4	
		Variable Capacitors		
C902	ECV1ZW10X53	10pF Ceramic Trimmer	1	
		Capacitors		
C401, 408	ECKDDS472ME	0.0047μF 250VAC ±20% Ceramic	2	Safety
C404, 405, 406, 407	RXAF103P22HD	0.01μF x2 500WV ±100% Ceramic	4	Safety
C408	ECQM6103MZ	0.01μF 600WV ±20% Polyester	1	Safety
C409	ECQM05822KZ	0.0082μF 50WV ±10% Polyester	1	
C410	ECEB16V1000	1000μF 16WV Electrolytic	1	
C411,412	ECEA16V100V	100μF 16WV Electrolytic	2	
C413	ECEM80R1000X	1000μF 80WV Electrolytic	1	Safety
C414, 415	ECEA50V100V	100μF 50WV Electrolytic	2	
C416	ECEB160V100	100μF 160WV Electrolytic	1	
C417	ECEA160V22V	22μF 160WV Electrolytic	1	
C901	ECQS1100K	10pF 125WV ±10% Styrol	1	
C903	ECQS1101K	100pF 125WV ±10% Styrol1	1	
C904	ECQM05473KZ	0.047μF 50WV ±10% Polyester	1	
C905	ECQM05474KZ	0.47μF 50WV ±10% Polyester	1	
C906	ECQS1600K	60pF 125WV ±10% Styrol	1	
C907, 909	ECQM05104KZ	0.1μF 50WV ±10% Polyester	2	
C908, 915	ECEA6V220	220μF 6.3WV Electrolytic	2	
C910	ECEA16V1000	1000μF 16WV Electrolytic	1	
C911, 912, 913, 914	DD620BC504M12	0.5μF 12WV ±20% Ceramic	4	
		RELAY		
RELAY	LAD1N		1	
		FUSES		
F1	XBA2C10TR0	1A	1	Safety
F2	XBA2C25TR0	2.5A	1	Safety
F3	XBA2C03TR0	315mA	1	Safety
F4	XBA2C012SS0	125mA	1	Safety
F5	XBA2C08TR0	800mA	1	Safety
F901	XBA2C10TR0	1A	1	Safety
		CABINET AND CHASSIS PARTS		
1	SFUP10EP23	Case, Top	1	
1-1	XTB3+8BFZ	Screw	12	
2	SFUP10EP09		1	
2-1	XTB3+8BFZ	Screw	5	
3-1	SJS5405	Connector	1	
3-2	SFDJ-S3P SHF	Connector	1	
3-3	XTW3+10HFZ	Screw	4	
3-4	SFDZ023X01	Holder, Fuse	10	
3-5	SFDJB3P-SHF	Connector	1	

Ref. No.	Part No.	Part Name & Description	Per Set	Remarks
4-1	SJS5307	Connector	1	
4-2	SFDJ-S3P-SHF	Connector	1	
4-3	SJS5505	Connector	1	
4-4	SHE-36	Clamper, Wire	1	
4-5	XST3+6FZS	Screw	1	
4-6	SFDJB3P-SHF	Connector	1	
5	SFUP10EP07	Mounting Plate	1	
5-1	SFEZ196	Supporting P.C.B	2	
5-2	SFEZNR-3N	Clamper Wire	2	
5-3	XTV3+8B	Screw	3	
5-4	SFXO10E-01	Spacer	1	
5-5	XST3+6FZS	Screw	3	
5-6	XTW3+10HFZ	Screw	5	
5-7	XWA3BFR	Washer	2	
5-8	XNG3BS	Nut	2	
6	SFUP10EP10		1	
6-1	XTB3+8BFZ	Screw	2	
7	SFUP10EP21		1	
7-1	SFNN10EP01	Name Plate	1	
8-1	SFDJ5047-04	Connector, 4P	1	
8-2	SFDJ5047-07	Connector, 7P	1	
8-3	SFDJ5047-11	Connector, 11P	1	
8-4	SFDJ5047-08	Connector, 8P	1	
8-5	SFDJ5048-04	Connector, 4P	1	
8-6	SFDJ5048-07	Connector, 7P	1	
8-7	SFDJ5048-11	Connector, 11P	1	
8-8	SFDJ5048-08	Connector, 8P	1	
8-9	XSN3+6FZS	Screw	2	
8-10	SFXO10E-01	Spacer	2	
8-11	SFUP10EP24		1	
8-12	XST3+6FZS	Screw	2	
8-13	SFDJ-TCBS-8N	Supporting P.C.B	4	
8-14	XTN35+8JFZ	Screw	4	
9	SKT3-1		2	
9-1	XTB3+8BFZ	Screw	6	
10	SFUP10EP08		1	
10-1	XTB3+8BFZ	Screw	2	
11	ETP85QBE	Power Transformer	1	
11-1	XST4+8FZS	Screw	6	
11-2	XWE4G10	Washer	4	
11-3	XWA4BFR	Washer	6	
11-4	XNG4BS	Nut	6	
12	TP-8405	Power Transformer	1	
13-1	SFDJ5047-08	Connector, 8P	1	
13-2	SFDJ5047-11	Connector, 11P	1	
13-3	SJS5307	Connector	2	
13-4	SFDJ-S3P-SHF	Connector	1	
13-5	SFDZ023X01	Holder, Fuse	2	
13-6	SFDJ-TCBS-8N	Supporting, P.C.B.	4	
13-7	XTN35+8JFZ	Screw	4	
13-8	SFDJB3P-SHF	Connector, 3P	1	
13-9	SFDJRTB1.5-3	Connector, 3P	2	
13-10	SFDJ5048-08A	Connector, 8P	1	
13-11	SFDJ5048-11A	Connector, 11P	1	
14	SFDS10EX01	Power Switch	1	
14-1	SFUP10E-03	Mounting plate, Power switch	1	
14-2	SFUP10E-04	Holder, Lamp	1	
14-3	SFUP10EP06	Spacer	1	
14-4	XYN3+C6FZS	Screw	2	
14-5	XST3+6 FZS	Screw	2	
15	XAM37T500	Lamp	1	
15-1	SMZA6091	Rubber, Lamp	1	

Ref. No.	Part No.	Part Name & Description	Per Set	Remarks
16	SFUP10EP20		1	
16-1	SFUZ10E 03		1	
17	SFDJ-D4F	Socket, DC	1	
17-1	XSS3+10FNS	Screw	2	
18	SFDJ10EP02E		1	
18-1	XSN26+8BN	Screw	2	
18-2	XWA26BFR	Washer	8	
18-3	XNG26BN	Nut	8	
18-4	SFER1C	Terminal	1	
19	TYPE 74/10/1158/10	Socket (PLESSEY) --- SKL	1	
19-1	XSS26+8BN	Screw	6	
20	SNE271S		1	
20-1	SNE273		1	
20-2	XWC4BFT	Washer	1	
20-3	XWA4BFR	Washer	1	
20-4	XNG4BS	Nut	1	
20-5	SFER1D	Terminal	2	
21	TYPE 74/10/0758/10	Socket (PLESSEY) --- SKN	1	
22	SFUP10EP11	Mounting Plate, AC cord	1	
22-1	XST3+6FZS	Screw	2	
22-2	XST3+12FZS	Screw	2	
22-3	XWA3BFR	Washer	2	
22-4	XNG3BS	Nut	2	
23	SFDS-HXW103	Selector switch	1	Safety
23-1	SFUM130G01	Base, selector switch	1	Safety
23-2	XTN3+10B	Screw	2	
24	GTBS-3	AC cord	1	
24-1	SF5R6N-4	Bushing, cord	1	
25	SFUP10EP22	Case, Bottom	1	
25-1	SKL151		4	
25-2	XTV3+16C	Screw	4	
25-3	XTB3+8BFZ	Screw	12	
25-4	XST3+6FZS	Screw	2	
25-5	XWC3BFT	Washer	2	
25-6	SFER1C	Terminal	3	
25-7	XWA3BFR	Washer	2	
25-8	XNG3BS	Nut	2	
26	SGLA9	Lamp Indicate	1	
27	SFKK10EP01	Panel, Front	1	
27-1	SKH47	Knob	2	
27-2	SGXA64	Washer	4	
27-3	XWE6EFZ	Washer	4	
27-4	XWAR6BFZ	Washer	4	
27-5	XNA6FFZ	Nut	4	
28	SBLA4-3	Knob, Power switch	1	
29	TYPE 74/10/1158/10	Socket (PLESSEY) --- SKM	1	
		ACCESSORY PARTS		
A1	SFNU102P01	Service Manual	1	
A2	SFNZ102X01	Mounting Template	1	
A3	SFWE010	45 Adaptor	1	
A4	SFWO010	Oil	1	
A5	XSN5+35S	Screw A	5	
A6	XSN5+43S	Screw B	5	
A7	SFXW650-2	Washer	5	
A8	XYN3+C6BS	Screw, Clumper	7	
A9	SFUP102M14E	Mounting Plate Motor	1	