INSTRUCTION MANUAL

for

5KW M.F. BROADCAST TRANSMITTER

TYPE 4-SU-55B

Standard Telephones and Cables Pty. Limited

Sydney Australia

ITT ASSOCIATE

INSTRUCTION MANUAL

for

5KW M.F. BROADCAST TRANSMITTER

TYPE 4-SU-55B

AMENDMENTS SEPTEMBER 1964

Page 25:	Items MR4 to MR11 inclusive. Silicon diode RAS310 will replace RS240 in all future equipments, and may replace RS240 in existing equipments.
Pages 31 and 32:	Items BR and RD. Relay type PT60M is superseded by type CH906.

AMENDMENT CERTIFICATE

The Amendments promulgated in the undermentioned Amendments List have been made in this publication.

Amendment List		Amendments made by	Date
Number	Date		

LIVE WIRES

MEAN *DEAD* MEN

1. Earth all equipment.
2. Disconnect all power before opening enclosures or removing covers.
3. Discharge all capacitors before working on equipment.

Keep away from live circuits!

INSTRUCTION MANUAL

for

5KW M.F. BROADCAST TRANSMITTER

TYPE 4-SU-55B

STANDARD TELEPHONES AND CABLES PTY. LIMITED

Sydney 1964 Australia

5kW MEDIUM FREQUENCY
BROADCAST TRANSMITTER
TYPE 4-SU-55B

CONTENTS

SECTION 1 - GENERAL DESCRIPTION

1.1 Brief Description

The type 4-SU-55B transmitter is designed to deliver an output of 5.5kW unmodulated carrier power over the frequency range 525-1610 kc/s. The equipment is completely self contained in a cabinet which occupies a floor area of 30 inches by 64 inches, and is 78 inches high.

The two-unit cabinet is fitted with two hinged doors at the front and two easily removable panels at the rear giving complete access to every part of the equipment. Windows are fitted to the front doors of the cabinet to permit inspection of the internal components, and dry type incoming air filters are built into the rear panels.

All operating controls are brought to the front panel and external connections are limited to the incoming mains and speech leads and the outgoing R.F. and monitoring leads. Where the environment of the transmitter will not readily absorb the heat losses, the exhaust air from the transmitter must be carried away in ducts.

Full protection is provided for operating personnel and with the doors open no potential in excess of 50 volts D.C. may be contacted. Built in control circuits provide for a variety of local or remote systems.

1.2 Performance

1.	Type of emission	A3
2.	Power output capability	5,500 watts
3.	Modulation	High level class B
4.	Frequency range	525-1610 kc/s
5.	Output impedance	200 ohms ±10%
6.	Type of output	Unbalanced
7.	Carrier shift	Less than 5%
8.	Frequency stability	±3 cycles per megacycle
9.	A.F. input impedance	600 ohms
10.	A.F. input level for 100% mod.	0 dbm. A 16 db pad in the audio input may be removed if desired.
11.	A.F. response, 30 to 10,000 c/s	±1 db relative to 1,000 c/s

12.	A.F. distortion, 50 to 7,500 c/s at 100% mod.	Not more than 3%
13.	Noise level, unweighted relative to 100% mod.	Better than -60db
14.	A.F. Monitor	6 milliwatts 600 ohms
15.	R.F. Monitor	5 watts 50 ohms
16.	Maximum ambient temperature	55°C
17.	Power supply	3 phase and neutral
18.	Power frequency	50 c/s
19.	Line voltage	380 to 440 volts Line 220 to 250 volts Phase
20.	Power factor	0.93

21. Power consumption at 1000 c/s for 5000 watts carrier

0% Mod.	11kW
40% Mod.	13.2kW
100% Mod.	16.8kW

22.	Transmitter floor space	30" x 64"
23.	Transmitter height	78"
24.	Transmitter weight unpacked	2,400 lb

SECTION 2 - SCHEDULE OF EQUIPMENT

2.1 Overall Equipment

The equipment received will consist of the following material:

Qty.	Description	Code
1	Transmitter cabinet fully equipped with all except following items:	
1	Relay Unit	609-SU-39C
1	Fan motor and blower	Richardson 1½ BMV
1	H.T. supply transformer	RS508.146
1	Modulation transformer	74-SU-179A
1	Modulation inductor	192-SU-38A
1	Modulation capacitor	17N20
1	H.T. filter inductor	192-SU-19A
3	H.T. filter capacitors	14N80
1	Vacuum capacitor	UCSF
1	Set of electron tubes	

2.2 Electron Tube Complement

Type	Description	Quantity
EF37A	Low noise pentode	2
807	Beam tetrode	2
4-125A	Radiation-cooled tetrode	5
3X2500F3	Forced-air-cooled triode	3
6X5GT	Vacuum twin diode	1
872A	H.C.M.V. rectifier (Replaced by silicon rectifiers in later transmitters).	6

2.3 H.T. Rectifier Assembly

Type	Description	Quantity
22-SU-23B	Assembly of 20 silicon diodes, RS640AF, in series.	6
	or	
22-SU-27A	Assembly of 18 silicon diodes, RAS508AF, in series.	3

SECTION 3 - R.F. CIRCUITS

3.1 R.F. Amplifiers

Reference to the circuit diagram 4-SU-55B will show that the R.F. section has 4 tubes V1 to V4. The R.F. exciter, comprising V1 and V2 and their components, is contained in a small box directly behind the ISOLATOR TUNING control on the front panel. Access to the tubes and crystal in this box may be obtained by removing the top cover. The components may be reached by removing the side cover which is accessible from the power side of the cabinet. A plug is contained in this box and is plugged into the socket in place of the crystal when the R.F. input is from an external source.

The grid-screen section of V1 is used as a conventional Pierce oscillator. A fine frequency control of ±30 cycles is provided by capacitor C1, which may be adjusted after removing the side cover. An additional fine frequency control of ±2 cycles appears on the front panel immediately above the A.F. ATTENUATOR. Approximately equal R.F. voltages appear from the grid and screen of V1 to ground and the grid voltage should be set to approximately 10 volts RMS by means of the potentiometer R9 which is accessible from the front of the exciter box.

The anode of V1 acts as an untuned amplifier whose output is fed to the grid of V2 via the contacts LA-2 of the line arc-over relay LA. This relay operates to suppress the R.F. and A.F. drives during a lightning strike or other conditions producing a short circuit on the R.F. transmission line.

V2 and V3 are conventional Class C voltage amplifiers providing the necessary driving power for the Power Amplifier V4. The anode voltage of V3 is partially modulated via a partial modulation winding on the modulation inductor, L14. V2 anode circuit is tuned from the front panel by means of the isolator tuning capacitor C14. V3 anode circuit is made up of components C21, C22, C23, and L5. The frequency bands are set by changing the capacitors C21 and C23. Tuning within the bands is effected by means of the tapping on L5 and fine tuning uses capacitor C22.

The anode circuit of the Power Amplifier V4 consists of C28, L8, C29, C30, and the primary of T1. Again the frequency bands are set by choice of the fixed capacitor C29. L8 serves the dual purpose of stabilising the amplifier and adjusting the operating condition of V4 for optimum efficiency. V4 is neutralised by means of C24, C85, and C86. The output circuit is tuned by choosing the correct value of C31 and tapping the secondary of T1. Output loading may be varied by means of the variable coupling of T1.

An artificial aerial of appropriate resistance which is capable of dissipating full transmitter output when 100% modulated, is built into the air duct outlet and this may be selected by means of the Dummy load switch SW14 which operates the contactor DL. R.F. line current is measured by means of the R.F. transformer T2. An external R.F. Line current meter may be connected across terminals 7 and 8.

A demodulator circuit, with tube V19, provides a 600 ohm output across terminals 4 and 5. A carrier failure relay, CF, is operated from the R.F. monitoring loop, on T1, and has its contacts brought out to terminals 18 to 23 to allow incorporation in control circuits if desired.

The line arc-over relay LA is operated by feeding 50 volts D.C. to the transmission line, and a D.C. short circuit or arc-over from the R.F. output terminal will then cause LA to be operated and suppress the A.F. and R.F. drives, while the short circuit persists.

3.2 S.W.R. Alarm

An S.W.R. alarm unit is fitted when requested, and connections to the line arc-over relay LA are changed accordingly as shown on the circuit diagram 4-SU-55 B/S. The relay LA is disconnected from the feed choke L9 and wired in series with relay B which is fitted with the S.W.R. alarm unit.

The Standing Wave Alarm is a device which is connected to the transmission line to detect any departure from the nominal impedance of the line. It shuts down the H.T. supply to the transmitter should the impedance change be excessive.

3.2 cont'd

The current transformer T21 in conjunction with R137 and C101 form a bridge type phase shifter, the output being applied to MR22. A second R.F. voltage, which is derived from the capacitor divider C105, C106, is applied to the other side of MR22. When these two voltages are equal and in phase, as achieved by successive adjustments of C101 and R138, the rectifier current is zero and alarm unit is balanced. The balance condition is indicated by meter M12.

Any departure from the normal line impedance either in phase or amplitude causes an increase in the current through the relay A. When relay A operates, relays B and LA operate in series. Relay LA causes D7 to operate and indicate an alarm. Relay B opens the supply to the bias marginal relay BM thus releasing the H.T. contactors. Gating rectifier MR23 steps the overload counting relay RLC. With the removal of the H.T. supply, relay A restores and H.T. is re-applied. Should the condition causing the line disturbance have disappeared, the counting relay RLC restores after a few seconds and normal operation is resumed. If the line disturbance remains, relay A operates each time the H.T. is restored until, after three applications of H.T., the H.T. supply is shut down by the short circuiting of relay GS by the counting relay.

SECTION 4 - A.F. CIRCUITS

The A.F. Section of the transmitter comprises tubes V5 to V12. The Amplifier is a four stage push-pull system with feedback from the anodes of the modulators V11 and V12 to the grids of the first A.F. amplifiers V5 and V6. Stabilising networks C47, C48, R51 and R52 for the low frequency end, and R87, R88, C74 and C73 for the high frequency end, ensure a margin against oscillation of at least 4 db.

Approximately 12 db of feedback is applied over the whole of the audio frequency range.

A pad of approximately 16 db is incorporated to give an input level, for 100% modulation, of 0 dbm.

The capacitor C87 is incorporated to ensure a response within ±1 db. Small changes may be made to this component to suit the individual requirements of a particular transmitter.

The A.F. signal is supplied via the 16 db pad, a 16 db variable attenuator, and a high quality permalloy cored and screened input transformer. T4, to the grids of the first A.F. amplifier tubes, V5 and V6. Conventional RC coupling is used to the next stage of audio amplification. The potentiometers R129 and R130 are used to minimise the 50 c/s noise introduced at this low level stage by any slight unbalance in the tube filaments.

The A.F. driver stage is a cathode follower stage to ensure good regulation for the Class B modulators. The cathode followers V9, V10 are biased from the bias supply via the bias adjusting potentiometers, R93 and R94. The bias adjustment for the modulators V11, V12 is by means of R95 and R96.

Due to direct coupling, the adjustment of the bias of cathode followers affects the bias of the modulators and vice versa. The bias adjusting potentiometers for the modulators and cathode followers are initially set to give nearly maximum voltage. The modulator bias is then reduced to give 80 milliamperes each in V11 and V12. The cathode follower bias is reduced to give 12 milliamperes each in V9 and V10 and as this affects the adjustment of the modulator bias it is necessary to make successive adjustments to get the correct standing currents.

SECTION 5 - POWER CIRCUITS

5.1 General

The entire transmitter operates from a 415 volt, 3 phase, 4 wire, 50 c/s supply.

The main H.T. is supplied from the mains via the H.T. transformer and a 3 phase full wave rectifier. The fan is also supplied from the 3 phase mains. The rest of the transmitter including control circuits and filament heating is supplied by 240 volt single phase transformers. All tube filaments are energised with alternating current. Provision is made for supplying the filament transformers from externally mounted regulators. Regulators are desirable where the mains voltage variation exceeds 2%.

Switching of low and high tension supplies is controlled from the main panel on the front of the transmitter. The entire input to the transmitter is supplied via the mains isolating switch S1.

5.2 H.T. Supply

The main H.T. system is supplied via the H.T. ISOLATOR, S2, the H.T. Contactors, HT1 and HT2, and the H.T. Transformer, T7. Some transmitters are fitted with mercury vapour rectifiers V13 to V18 (see circuit diagram 4-SU-55 B/V) whilst others have silicon rectifiers MR15 to MR20 (see circuit diagram 4-SU-55 B/S). Where mercury vapour rectifiers are used, provision is made for a spare tube to be mounted and its filaments kept hot.

Two types of silicon rectifier assemblies are in use. One assembly which uses rectifiers type RS640AF requires the addition of voltage transient suppression components C88, C89, C90, R134, R135, and R136 across the secondary windings of the high tension transformer T7. Where rectifier assemblies using avalanche rectifiers type RAS508AF are fitted no suppression of T7 is required as the rectifiers are capable of withstanding switching surges.

The output voltage from the rectifier is 5000V whilst 2,500V is available at the star point of the secondary of T7.

The H.T. voltage is metered by M-7. An H.T. overload relay is incorporated in the common negative of both H.T. and ½ H.T. supplies. Adjustment is by means of the potentiometer R116.

The resistors across HT2, R117 to R119, limit the starting current surges and may be left in circuit for a period not exceeding 10 minutes, whilst the transmitter is being tuned. The resistors are shorted out by HT2 which is operated by moving the TUNE/TRANSMIT switch to TRANSMIT.

Choke input filters are used in both H.T. supplies. These are composed of L15 and C76 for the H.T., and L13 and C78 for the ½ H.T. supplies.

5.3 Minor H.T. Supply

The minor H.T. supply is fed from the red phase on the load side of HT1. The transformer T8 supplies the selenium rectifier, MR12, to give an output of approximately 430 volts.

This supplies all the low power stages in the transmitter including the R.F. Exciter.

Metering is by means of the MIN. H.T. SUPPLY voltmeter, M-8. An overload relay MO with adjusting potentiometer, R115, provides protection for the minor H.T. supply.

Filtering is by means of C79 and L11.

5.4 Bias Supply

The bias supply is fed from the yellow phase on the load side of the MAINS ISOLATOR, S1, via the L.T. ISOLATOR, S3, and the filament contactor FL. The transformer, T17, supplies the selenium rectifier, MR13, to give an output of approximately 400 volts. This supplies the fixed bias for all the high power stages in the transmitter. Filtering is by means of L16, C80, and C81.

The bias supply voltage is metered by the BIAS SUPPLY voltmeter, M-9. A bias marginal relay BM, is included to prevent the operation of the H.T. contactors if the bias is insufficient, and switches the H.T. off should the bias voltage fall during operation of the transmitter. The adjustment of the bias marginal relay BM is by means of R97.

5.5 Control Supplies

The 50 volt D.C. control supply is fed from the blue phase via the L.T. ISOLATOR. The transformer, T9, has 2 two secondary windings, one to give the D.C. supply (via rectifier MR14) and the other a 10 volt supply for the lamps and crystal oven heater.

The A.C. control circuits are supplied via the L.T. ISOLATOR, S-3, from the red phase.

SECTION 6 - CONTROL CIRCUITS

6.1 Normal Operation

For normal operation of the equipment from the front panel of the transmitter, the terminals: 10 and 11, 13 and 14, 16 and 17, 18 and 19, 37 and 38, and 39 and 40 are bridged. These terminals are used to allow a variety of remote control operations to be carried out.

With reference to the circuit diagram 4-SU-55B, the operation is as follows:

When the circuit breakers S1 to S3 are closed, the 50 volt control voltage is established and the crystal heater with its associated lamp LP-1 energised. Also the MAINS ON lamp LP-2 will be lit.

When the L.T. ON switch S4 is closed the L.T. relay operates, causing the blower delay relay BR and the blower contactor BL to operate.

When the cooling air pressure reaches normal working pressure the air switch S17 will be closed causing the filaments to be energised by the operation of the filament contactor FL. The contact FL-4 makes the 50 volt D.C. supply available to the H.T. control circuits. The relay LO operates, since only one side is energised, causing its two contacts to be opened.

After approximately two minutes the rectifier filament delay relay RD operates, allowing ample time for the rectifier tubes to reach normal operating conditions. Where silicon rectifiers are fitted, a shorter delay of approximately ½ a minute is given to allow time for the filaments of the indirectly heated tubes to warm up. Expiry of the time delay period is indicated by the lighting of the TIME DELAY EXPIRED lamp LP4. The relay RDH will be energised and lock itself via contacts RDH.1. Provided all gate switches on doors and panels are closed, the circuit will be complete to the H.T. ON switch S-7. The GATES CLOSED lamp LP5 will light when all gate switches are closed and the filaments energised.

Pressing the H.T. ON button operates the C and H relays. Relay C locks itself in and closes the primary circuit to the bias transformer, T17.

When the bias voltage is established contact BM-1 closes causing relay ST to operate and energise the first H.T. contactor, HT1. Contact HT1-4 operates the H.T. delay relay, HD, which has approximately one second delay to reduce starting surge currents. If the TUNE/TRANSMIT switch S8 is closed the second H.T. contactor, HT2, will bring on the full high tension voltage.

Should the transmitter be required before the expiration of the two minute H.T. delay, a short time delay facility is supplied. Before the two minute delay has finished, the relay RDH may be operated by pressing the button H.T. ON SHORT TIME, S5. The H.T. is then brought on as described above.

6.2 Overload Sequence

Overload relays are fitted to the H.T. supply, minor H.T. supply, modulators and R.F. power amplifier and driver tubes. In the event of an overload in one of these circuits the appropriate relay operates and opens the circuit to relay ST which releases causing its contact to open and drop the H.T. contactors out.

When an overload relay operates the contact number 1 closes the circuit to the appropriate drop indicator or overload marking relay and a pulse of current is sent through the 150 ohm stepping coil of the counter relay RLC. The counter relay steps along one contact and open circuits the supply to relay H. The capacitor C83 will hold H operated for approximately 5 seconds.

Immediately the H.T. voltage drops, the overload relay which has been operated releases, and the first H.T. contactor, etc. operates again. If the overload persists, the procedure above is repeated up to a total of four overloads after which the counter relay RLC will have moved to position 5, short-circuiting the relay C and hence switching off the H.T. until such time as the H.T. ON push button is pressed manually. The 1000 ohm resistor R113 in series with the Relay C prevents short circuiting of the 50 volt supply.

Regardless of whether the overload occurs once only or the H.T. supply finally remains off, the relay H releases after about five seconds due to the discharge of C83. The contact H-2 then operates the 250 ohm re-setting coil of the counter relay RLC, restoring it to the original position, thereby re-operating the relay H and re-charging the capacitor C83.

The line arc-over relay LA short circuits the drive to the R.F. amplifier and modulator, should an arc occur on the R.F. line. This relay has an appropriate marking relay D7 and operates the counter such that after 4 successive line arcs the H.T. is switched off. The H.T. is not dropped at each arc. The bias marginal relay BM is arranged to release relay ST and hence drop out the H.T. contactors, should the bias voltage fall.

A carrier fail relay CF has its contacts taken to terminals 18 to 23 for connection to an external alarm.

6.3 Brief Mains Failure

In the event of an interruption to the mains supply all relays and contactors release except the Mains Hold relay H, which remains operated for about 5 seconds.

If the mains supply is restored within a 5 second period, relays LT, RDH, and BR operate. Upon the Closing of FL-4, relay LO has both coils energised at once, and hence will not operate. Since the contact LO-2 is closed relay C is energised and will bring on the H.T. supplies. When the contact HT1-5 opens the relay LO operates and the system is restored to its normal condition.

6.4 Automatic Starting

The transmitter may be made to follow the complete starting sequence automatically following the closing of the LT ON switch. For this purpose the bridge on terminals 16 and 17 is removed and a bridge placed on terminals 15 and 16. The starting sequence is then normal until the operation of the rectifier delay relay RD. RDH-2 closes, the normally discharged capacitor C82 is rapidly charged to 50 volts, the current flowing being sufficient to operate relay C which causes the H.T. to be applied.

The brief mains failure reclosing facility operates in this case and a longer mains failure will result in a normal 2 minute starting period.

Should a series of overloads drop the transmitter H.T. supply, the starting sequence may be initiated again by turning off the L.T. ON switch and then re-closing.

6.5 Remote Control

The L.T. ON, H.T. ON, and H.T. OFF switches are all brought out to terminals and may be wired for remote control of the transmitter. Remote control may be automatically or manually started depending on the bridging of terminals 15 and 16 or 16 and 17. The choice of local over-riding of the remote control or not is available, depending on the connection to the remote control terminals. If remote supervision of H.T. ON is required it is necessary to run leads from LP3 or, otherwise, make use of the contacts HT2-6 of the second H.T. contactor, HT2.

SECTION 7 - COMPONENTS LIST

ITEM	CIRCUIT FUNCTION	DESCRIPTION	SUPP-LIER	SUPPLIER'S TYPE NO.
	CAPACITORS			
C1	Crystal Trim, coarse	50pF 13 plate variable	Polar	C803
C2	Crystal Anode	120pF ±5% 500V DCW mica	Ducon	SM
C3	Anode Blocking	0.01uF ±10% DCW mica 500V	Ducon	SM
C4	Crystal Grid	50pF ±5% 500V DCW mica	Ducon	SM
C5	Crystal Trim, fine	4-12pF 7 plate variable	Polar	C804
C6	Grid Blocking	0.01uF ±10% 500V DCW mica	Ducon	SM
C7	C.O.Cath. bypass	0.01uF ±10% 500V DCW mica	Ducon	SM
C8	C.O.Anode bypass	0.01uF ±10% 500V DCW mica	Ducon	SM
C9	Isol.Grid Blocking	0.01uF ±10% 500V DCW mica	Ducon	SM
C10	Isol.Cath.Bypass	0.01uF ±10% 500V DCW mica	Ducon	SM
C11	Isol.Screen bypass	0.01uF ±10% 500V DCW mica	Ducon	SM
C12	Isol.Anode bypass	0.01uF ±10% 1kV DCW mica	Ducon	M
C13	Isol.Tune Blocking	0.01uF ±10% 1kV DCW mica	Ducon	M
C14	Isol. Tuning	200pF ±10% variable	STC	SP29574
C15	Driver Grid Blocking	0.01uF ±10% 1kV DCW mica	Ducon	M
C16	Driver Grid bypass	0.01uF ±10% 1kV DCW mica	Ducon	M
C17	Driver Fil. bypass	0.01uF ±10% 1kV DCW mica	Ducon	M
C18	Driver Fil. bypass	0.01uF ±10% 1kV DCW mica	Ducon	M
C19	Driver Screen bypass	0.001uF ±10% 500V DCW mica	Ducon	SM

ITEM	CIRCUIT FUNCTION	DESCRIPTION	SUPP-LIER	SUPPLIER'S TYPE NO.
C20	P.A. Grid Blocking	0.001uF ±10% 7.5kV DCW ceramic	Ducon	CAA75
C21	Dr. fixed tuning 525-655 kc/s	1000pF ±10% 7.5kV DCW ceramic	Ducon	CAA75
	655-820 kc/s	560pF ±10% 10kV DCW ceramic	Ducon	CAA75
	820-1030 kc/s	500pF ±10% 10kV DCW ceramic	Ducon	CAA75
	1030-1290 kc/s	390pF ±10% 10kV DCW ceramic	Ducon	CAA75
	1290-1610 kc/s	330pF ±10% 10kV DCW ceramic	Ducon	CAA75
C22	Dr. fine tuning	30-260pF variable	STC	41-SU-31B
C23	Dr. fixed tuning 525-655 kc/s	2000pF ±10% 10kV DCW ceramic	Ducon	CAA140
	655-820 kc/s	1300pF ±10% 10kV DCW ceramic	Ducon	CAA100
	820-1030 kc/s	1000pF ±10% 10kV DCW ceramic	Ducon	CAA75
	1030-1290 kc/s	800pF ±10% 10kV DCW ceramic	Ducon	CAA75
	1290-1610 kc/s	700pF ±10% 10kV DCW ceramic	Ducon	CAA75
C24	P.A. Neutralising	5 plates 3/8" spacing	STC	SP90557A
C25	P.A. Fil. bypass	0.02uF ±10% 1kV DCW mica(two in parallel)	Ducon	M
C26	P.A. Fil. bypass	0.02uF ±10% 1kV DCW mica(two in parallel)	Ducon	M
C27	P.A. Anode blocking	500pF ±10% 10kV DCW ceramic	Ducon	CAA75
C28	P.A. Harm.Tuning	200pF ±10% 10kV DCW ceramic (two in parallel)	Ducon	CAA75

ITEM	CIRCUIT FUNCTION	DESCRIPTION	SUPP-LIER	SUPPLIER'S TYPE NO.
C29	P.A. Fixed tuning			
	525-655 kc/s	2x2000pF ±10% 10kV DCW ceramic in series	Ducon	CAA140
		2x1000pF ±10% 7.5kV DCW ceramic in series, two groups in parallel	Ducon	CAA75
	655-1030 kc/s	2x2000pF ±10% 10kV DCW ceramic in series	Ducon	CAA140
	1030-1610 kc/s	2x1000pF ±10% 10kV DCW ceramic in series	Ducon	CAA140
C30	P.A. fine tuning	10-500pF 15kV Var.	Jenn-ings	UCSF
C31	Line tuning			
	525-655 kc/s	3x2000pF ±10% 10kV DCW ceramic in parallel	Ducon	CAA140
	655-820 kc/s	2x2000pF ±10% 10kV DCW ceramic	Ducon	CAA140
		1x500pF ±10% 10kV DCW ceramic in parallel	Ducon	CAA75
	820-1030 kc/s	2x2000pF ±10% 10kV DCW ceramic	Ducon	CAA140
	1030-1290 kc/s	2000pF ±10% 10kV DCW ceramic	Ducon	CAA140
		1000pF ±10% 10kV DCW ceramic in parallel	Ducon	CAA100
	1290-1610 kc/s	2000pF ±10% 10kV DCW ceramic	Ducon	CAA140
		500pF ±10% 10kV DCW ceramic in parallel	Ducon	CAA75
C32	Not used			
C33	Line Blocking	0.04uF ±10% 1kV DCW mica	Ducon	ME114
C34	C.F. Bypass	0.01uF ±10% 500V DCW mica	Ducon	SM

ITEM	CIRCUIT FUNCTION	DESCRIPTION	SUPP-LIER	SUPPLIER'S TYPE NO.
C35	Line C.T. bypass	0.01uF ±10% 500V DCW mica	Ducon	SM
C36	L.A. bypass	0.01uF ±10% 500V DCW mica	Ducon	SM
C37	Mon. Feed	5pF ±1pF 4kV DCW ceramic	UCC	HVD1
C38	Mon. Divider	27pF ±10% 500V DCW mica	Ducon	SM
C39	Mon. Rect.	27pF ±10% 500V DCW mica	Ducon	SM
C40	Mon. Filter	200pF ±10% 500V DCW mica	Ducon	SM
C41	Mon. Blocking	0.1uF ±20% 200V DCW paper	UCC	PMM
C42	D.L. Blocking	0.04uF ±10% 1kV DCW mica	Ducon	ME114
C43	Multi meter bypass	0.01uF ±10% 500V DCW mica	Ducon	SM
C44	AF1 decoupling	10uF +20%-10% 750V DCW paper	Ducon	4S100
C45	AF1 anode coupling	2uF +20%-10% 750V DCW paper	Ducon	4S20
C46	AF1 anode coupling	2uF +20%-10% 750V DCW paper	Ducon	4S20
C47	AF2 anode coupling	0.05uF +20%-10% 4000V DCW paper	Ducon	10N005
C48	AF2 anode coupling	0.05uF +20%-10% 4000V DCW paper	Ducon	10N005
C49	CF Screen bypass	16uF +20%-10% 750V DCW paper	Ducon	4S160
C50	CF Screen bypass	16uF +20%-10% 750V DCW paper	Ducon	4S160
C51) to) C60)	Feedback Divider	50pF ±10% 2kV DCW mica	Ducon	MA245
C61	Not used			
C62) to) C71)	Feedback Divider	50pF ±10% 2kV DCW mica	Ducon	MA245

ITEM	CIRCUIT FUNCTION	DESCRIPTION	SUPP-LIER	SUPPLIER'S TYPE NO.
C72	Not used			
C73	Feedback term.	0.04uF ±10% 1kV DCW mica	Ducon	ME114
C74	Feedback term.	0.04uF ±10% 1kV DCW mica	Ducon	ME114
C75	Mod. Coupling	2uF +20%-10% 12kV DCW paper	Ducon	17N20
C76	H.T. Filtering	3x8uF +20%-10% 8kV DCW paper in parallel	Ducon	14N80
C77	AF2 Decoupling	4uF +20%-10% 4kV DCW paper	Ducon	10N40
C78	½ H.T. filtering	2x4uF +20%-10% 4kV DCW paper in parallel	Ducon	10N40
C79	Min.H.T. filtering	20uF	Ducon	5S200
C80	Bias tuning	0.25uF ±20% 500V DCW paper	UCC	CP47S
C81	Bias filter	20uF +20%-10% 1000V DCW paper	Ducon	5S200
C82	Auto Start	300uF 50V DCW electrolytic	Ducon	EMG1570
C83	Relay H Holding	300uF 50V DCW electrolytic	Ducon	EMG1570
C84	Spark quench	0.5uF ±20% 350V DCW paper	UCC	PMP
C85	Neut. blocking	56pF ±20% 10kV DCW ceramic	Ducon	CAA33
C86	Neut. blocking	56pF ±20% 10kV DCW ceramic	Ducon	CAA33
C87	H.F. Equalising	0.039uF ±20% 200V DCW polystyrene	Ducon	DFB231
C88 to C90	T7 transient voltage suppressing	0.1uF 3kV ACW paper (Used only when MR15 to MR20 are type RS640.)	Ducon	12P01
C91, C92	V11 fil.bypass	.01uF ±10% 1kV DCW mica	Ducon	M
C93, C94	V12 fil.bypass	.01uF ±10% 1kV DCW mica	Ducon	M
C95 to C100	H.T. rectifier commutating	(a) Assembly of 20 capacitors in series each 0.047uF,	Ducon	DFB1032

ITEM	CIRCUIT FUNCTION	DESCRIPTION	SUPP-LIER	SUPPLIER'S TYPE NO.
		1000V DCW paper where H.T. rectifiers MR15 to MR20 are RS640 (Part of rectifier assembly 22-SU-23B)		
		(b) Assembly of 9 capacitors in series each 500pF 3kV DCW ceramic where H.T. rectifiers MR15 to MR20 are RAS508AF (Part of rectifier assembly 22-SU-27A)	Ducon	CDH'BY'
C101	S.W.R. phase	140pF variable	Eddy-stone	586
C102	D.C. blocking	.01uF ±10% 500V DCW mica	Ducon	SM
C103	M12 R.F. bypass	.01uF ±10% 500V DCW mica	Ducon	SM
C104	S.W.R. time delay	50uF	Ducon	ET1X
C105	S.W.R. alarm divider	20pF consisting of 12" of 71 ohm ½" dia. co-axial cable	S.T.C.	PT29M
C106	S.W.R. alarm divider	2,200pF ±10% 500V DCW mica	Ducon	SM
	FUSES			
F1	Minor H.T.	Fuseholder cartridge 6A	Eng. Elect.	NSP NS6
F2	50 volt	Fuseholder cartridge 2A	Eng. Elect.	NSP NS2
	INDUCTORS			
L1	Osc. screen choke	1.25mH	Eddy-stone	1010
L2	Isol. Tuning	300uH	STC	SP76582
L3	Driver Grid Choke	1.25mH	Eddy stone	1010
L4	Driver Anode Feed	8mH	STC	SP4201-L

ITEM	CIRCUIT FUNCTION	DESCRIPTION	SUPP-LIER	SUPPLIER'S TYPE NO.
L5	Driver tuning	120uH	STC	20-SU-39
L6	PA Grid Choke	4mH	STC	SP4201-E
L7	PA Anode Feed	2mH	STC	SP87080
L8	PA Harm. Tuning	37uH	STC	SP76584
L9	Line Arc Feed	2.5mH	STC	SP4201-C
L10	Diode D.C. Return	1.25mH	Eddy-stone	1010
L11	Min. H.T. Filter	6H 0.6A	STC	K5400-6
L12	AF2 Decoupling	10H 0.06A	STC	192-SU-36
L13	½HT Filter	2 x 6H 0.6A series	STC	K5400-6
L14	Mod. Reactor	18H	STC	192-SU-48A
L15	H.T. Filter	3H 3A	STC	192-SU-19A
L16	Bias Filter	6H 0.6A	STC	K5400-6
L17	Mod. stabilising	8 turns on R59	STC	----
L18	Mod. stabilising	8 turns on R60	STC	----
L19	S.W.R. alarm D.C. feed	1.25mH	Eddy-stone	1010
L20	S.W.R. alarm D.C. feed	1.25mH	Eddy-stone	1010
	LAMPS			
LP1	Crystal oven	12V 0.1A MES panel lamp	Mazda	8003D
LP2	Mains on	12V 0.3A	Bulgin	D230
LP3	H.T. On	12V 0.3A	Bulgin	D230
LP4	Rect.time delay	50V No. 2	STC	313
LP5	Gate switch	50V No. 2	STC	313
LP6	Driver O/L	48V .02A	Rubin	Liliput
LP7	P.A. O/L	48V .02A	Rubin	Liliput
LP8	Mod. 'A' O/L	48V .02A	Rubin	Liliput
LP9	Mod. 'B' O/L	48V .02A	Rubin	Liliput
LP10	Minor H.T. O/L	48V .02A	Rubin	Liliput
LP11	H.T. O/L	48V .02A	Rubin	Liliput
LP12	Line arcover/ external mon. O/L	48V .02A	Rubin	Liliput
LP13	S.W.R. alarm adjust	48V 0.02A	Rubin	Liliput

ITEM	CIRCUIT FUNCTION	DESCRIPTION	SUPP-LIER	SUPPLIER'S TYPE NO.
	METERS			
M1	Multimeter	0-1mA DC scale 0-5	Paton	K425
M2	P.A. cathode	0-2A DC	Paton	K425
M3	R.F. line	0-1mA DC scaled 7.5A RF	Paton	K425
M4	D/L R.F. current	Int. thermocouple	Paton	35
M5	Mod. A cathode	0-1A DC	Paton	K425
M6	Mod. B cathode	0-1A DC	Paton	K425
M7	H.T. voltmeter	0-10mA DC scaled 0-5KV	Paton	K425
M8	Min. H.T. voltmeter	0-500V DC	Paton	35
M9	Bias voltmeter	0-500V DC	Paton	35
M10	Mains voltmeter	0-500V AC	Paton	K425
M11	Elapsed hours	Hours 240V 50 c/s	Sangamo	S16
M12	S.W.R. alarm adjust	500mA F.S.D.	Master	S225
	SEMICONDUCTOR DIODES			
MR1	Line Meter	2 silicon diodes	Mullard	OA202
MR2	Carrier Fail	Germanium diode 90V P.I.V. 50mA	Philips	OA91
MR3	Bias marginal	Zener diode 15V ±5% 1W	STC	Z2A150
MR4	Relay H Blocking	Silicon diode 500V P.I.V. 900mA	STC	RS240
MR5	Count. and Gate	Silicon diode 500V P.I.V. 900mA	STC	RS240
MR6	Count. and Gate	Silicon diode 500V P.I.V. 900mA	STC	RS240
MR7	Count. and Gate	Silicon diode 500V P.I.V. 900mA	STC	RS240
MR8	Count. and Gate	Silicon diode 500V P.I.V. 900mA	STC	RS240
MR9	Count. and Gate	Silicon diode 500V P.I.V. 900mA	STC	RS240
MR10	Count. and Gate	Silicon diode 500V P.I.V. 900mA	STC	RS240
MR11	Count. and Gate	Silicon diode 500V P.I.V. 900mA	STC	RS240
MR12	Min. H.T. Rect.	Selenium rectifier	STC	B450-20-1/H4

ITEM	CIRCUIT FUNCTION	DESCRIPTION	SUPP-LIER	SUPPLIER'S TYPE NO.
MR13	Bias Rect.	Selenium rect.	STC	B450-20-1/H4
MR14	-50 Control	Selenium rect.	STC	B450-3-1
MR15 to MR20	High tension rectifier (Later transmitters use second of two groups listed)	(a) Assembly of 20 silicon diodes in series each 500V P.I.V. 30A (Part of rectifier assembly 22-SU-23B)	STC	RS640AF
		OR (b) Assembly of 9 silicon diodes in series each 800V P.I.V. 5A (Part of rectifier assembly 22-SU-27A)	STC	RAS508AF
MR21	Relay C gate	Silicon diode 500V P.I.V. 900mA	STC	RS240
MR22	S.W.R. alarm detector	Germanium diode 90V P.I.V. 50mA	Philips	OA91
MR23	Counter gate	Silicon diode 500V P.I.V. 900mA	STC	RS240
	PLUGS			
PL1	Crystal	Part of crystal assembly X1		
PL2	External R.F. input	7 pin	Amph-enol	86-CP7L
PL3	External R.F. input	B.N.C. coaxial	Amph-enol	UG-88/U
PL4	R.F. monitor output	B.N.C. coaxial	Amph-enol	UG-88/U
PL5	A.F. monitor output	4 pin	Carr-Jones	P-304-CCT
PL6	Monitor R.F. input	B.N.C. coaxial	Amph-enol	UG-88/U
PL7	Monitor R.F. output	B.N.C. coaxial	Amph-enol	UG-88/U
PL8	Monitor	8 pin	Carr-Jones	P-308-CCT

ITEM	CIRCUIT FUNCTION	DESCRIPTION	SUPP-LIER	SUPPLIER'S TYPE NO.
	RESISTORS			
R1	Crystal devolter	470K ohm 10% 1W carb.	Morganite	AY
R2	Crystal devolter	470K ohm 10% 1W carb.	Morganite	AY
R3	Oscillator grid	100K ±10% 1W carbon	Morganite	AY
R4	Oscillator grid stopper	47 ohm ±20% 1W carbon	Morganite	AY
R5	Osc.Cath.metering	20.4 ohm ±.2% 3W wire wound	IRC	RWV4J
R6	Osc. screen stopper	47 ohm ±20% 1W carbon	Morganite	AY
R7	Osc. screen feed	100K ohm ±10% 1W carb.	Morganite	AY
R8	Osc. screen divider	4.7K ohm ±10% 1W wire wound	IRC	PW10
R9	Osc. screen divider	8K ohm 50W variable	IRC	PR50
R10	Osc. screen divider	10K ohm ±10% 10W wire wound	IRC	PW10
R11	Osc. anode load	10K ohm ±10% 6W wire wound	IRC	RWV4L
R12	Isol. grid	100K ohm ±10% 1W carb.	Morganite	AY
R13	Isol. grid stopper	47 ohm ±20% 1W carbon	Morganite	AY
R14	Isol. cath. bias	500 ohm ±5% 6W wire wound	IRC	RWV4L
R15	Isol. cath. metering	20.4 ohm ±2% 3W wire wound	IRC	RWV4J
R16	Isol. screen stopper	100 ohm ±10% 1W carbon	Morganite	AY
R17	Isol. screen feed	150K ohm ±10% 2W carb.	IRC	BTB
R18	Isol. anode feed	2K ohm ±5% 6W wire wound	IRC	RWV4L
R19	Dr. Grid stopper	47 ohm ±20% 1W carbon	Morganite	AY
R20	Dr. Cath.metering	2 ohm ±2% 3W wire wound	IRC	RWV4J
R21	Dr. overload	15 ohm 25W variable	IRC	PR25
R22	Dr. screen stopper	47 ohm ±20% 1W carbon	Morganite	AY
R23	Dr. screen meter	20.4 ohm ±2% 3W wire wound	IRC	RWV4J

ITEM	CIRCUIT FUNCTION	DESCRIPTION	SUPP-LIER	SUPPLIER'S TYPE NO.
R24	Dr.screen feed	4.7K ohm ±10% 10W wire wound	IRC	PW10
R25	Dr. anode feed	1000 ohm ±10% 75W wire wound	IRC	FRW24B
R26	PA Grid leak	1000 ohm ±10% 75W wire wound	IRC	FRW24B
R27	PA Overload	2 ohm 25W variable	IRC	PR25
R28	Line C.T. load	2 x 12 ohm ±10% carb. in parallel	Morganite	C14
R29	R.F. meter adjust	10K ohm 1W variable	STC	SP44490L
R30	Dummy load	2 x 100 ohm nominal series	STC	177-SU-1C
R31	C.F. protection	200 ohm ±10% 1W carb.	Morganite	AY
R32	C.F. dropping	2K ohm ±10% 3W wire wound	IRC	RWV4J
R33	Diode filter	220K ohm ±5% 1W carb.	Morganite	AY
R34	Diode load	33K ohm ±5% 1W carbon	Morganite	AY
R35	T4 terminating	22K ohm ±5% 1W carbon	IRC	BTA
R36	T4 terminating	22K ohm ±5% 1W carbon	IRC	BTA
R37	A.F.1 Cath.Bias	500 ohm ±5% 3W wire wound	IRC	RWV4J
R38	A.F.1 screen dropping	220K ohm ±10% 1W carb.	IRC	BTA
R39	A.F.1 anode load	100K ohm ±5% 1W carb.	IRC	BTA
R40	A.F.1 anode load	100K ohm ±5% 1W carb.	IRC	BTA
R41	A.F.1 metering	250 ohm ±2% 3W wire wound	IRC	RWV4J
R42	A.F.1 metering	250 ohm ±2% 3W wire wound	IRC	RWV4J
R43	A.F.2 grid leak	150K ohm ±5% 1W carbon	IRC	BTA
R44	A.F.2 grid leak	150K ohm ±5% 1W carbon	IRC	BTA
R45	A.F.2 Cath. bias	1K ohm ±5% 6W wire wound	IRC	RWV4L
R46	A.F.1 decoupling	33K ohm ±10% 1W carbon	IRC	BTA
R47	A.F.2 metering	20.4 ohm ±2% 3W wire wound	IRC	RWV4J
R48	A.F.2 metering	20.4 ohm ±2% 3W wire wound	IRC	RWV4J
R49	A.F.2 anode load	40K ohm ±5% 75W wire wound	IRC	FRW24B

ITEM	CIRCUIT FUNCTION	DESCRIPTION	SUPP-LIER	SUPPLIER'S TYPE NO.
R50	A.F.2 anode load	40K ohm ±5% 75W wire wound	IRC	FRW24B
R51	C.F. Grid leak	150K ohm ±5% 1W carb.	IRC	BTA
R52	C.F. Grid leak	150K ohm ±5% 1W carb.	IRC	BTA
R53	C.F. Screen dropping	2 x 40K ohm ±5% 75W wire wound	IRC	FRW24B
R54	C.F. Screen dropping	2 x 40K ohm ±5% 75W wire wound	IRC	FRW24B
R55	C.F. Screen bleed	20K ohm ±5% 75W wire wound	IRC	FRW24B
R56	C.F. Screen bleed	20K ohm ±5% 75W wire wound	IRC	FRW24B
R57	C.F. Metering	20.4 ohm ±2% 3W WW	IRC	RWV4J
R58	C.F. Metering	20.4 ohm ±2% 3W WW	IRC	RWV4J
R59	Mod.Grid stopper	47 ohm ±10% 2W carbon	Morganite	C14
R60	Mod.Grid stopper	47 ohm ±10% 2W carbon	Morganite	C14
R61	Mod. O/L Adjust	2 ohm 25W variable	IRC	PR25
R62	Mod. O/L Adjust	2 ohm 25W variable	IRC	PR25
R63) to) R72)	Feedback divider	330K ohm ±5% 2W carb.	IRC	BTB
R74) to) R83)	Feedback divider	330K ohm ±5% 2W carb.	IRC	BTB
R85	Feedback bleed	390 ohm ±5% 3W WW	IRC	RWV4J
R86	Feedback bleed	390 ohm ±5% 3W WW	IRC	RWV4J
R87	Feedback stabilising	56 ohm ±5% 1W carbon	IRC	BTA
R88	Feedback stabilising	56 ohm ±5% 1W carbon	IRC	BTA
R89	H.T. Meter mult.	10 x 50K ohm ±2% 75W WW in parallel	IRC	FRW24B
R90	H.T. Meter bleed	2.2K ohm ±10% 1W carb.	IRC	BTA
R91	L12 Damping	5K ohm ±10% 6W WW	IRC	RWV4L
R92	C.F. bias bleed	8.2K ohm 30W WW	IRC	FRW21B
R93	C.F. bias Pot.	8K ohm 50W variable	IRC	PR50
R94	C.F. bias Pot.	8K ohm 50W variable	IRC	PR50
R95	Mod. bias Pot.	3.5K ohm 50W variable	IRC	PR50
R96	Mod. bias Pot.	3.5K ohm 50W variable	IRC	PR50
R97	Mod. bias bleed	2.5K ohm 50W variable	IRC	PR50

ITEM	CIRCUIT FUNCTION	DESCRIPTION	SUPP-LIER	SUPPLIER'S TYPE NO.
R98	P.A. bias bleed	1.5K ohm ±5% 75W WW	IRC	FRW24B
R99	Dr. bias bleed	500 ohm ±5% 75W WW	IRC	FRW24B
R100	P.A. Grid meter	2 ohm ±2% 3W WW	IRC	RWV4J
R101	Dr. Grid meter	20.4 ohm ±2% 3W WW	IRC	RWV4J
R102	Dr. Grid bias	3.3K ohm ±10% 10W WW	IRC	PW10
R103	Meter Multi.	850 ohm ±2% 3W WW	IRC	RWV4J
R104	Counter dropping	560 ohm ±10% 3W WW	IRC	RWV4J
R105	A.F.2 Grid stopper	470 ohm ±10% 1W carbon	IRC	BTA
R106	A.F.2 Grid stopper	470 ohm ±10% 1W carbon	IRC	BTA
R107	Lamp Dropping	5 ohm ±10% 6W WW	IRC	RWV4L
R108	Lamp Dropping	5 ohm ±10% 6W WW	IRC	RWV4L
R109	Lamp Dropping	200 ohm ±10% 3W WW	IRC	RWV4J
R110	Lamp Dropping	200 ohm ±10% 3W WW	IRC	RWV4J
R111	C82 Discharge	10K ohm ±10% 6W WW	IRC	RWV4L
R112	Current limiting	1K ohm ±10% 3W WW	IRC	RWV4J
R113	C83 limiting	250 ohm ±10% 3W WW	IRC	RWV4J
R114	Spark Quench	200 ohm ±10% 3W WW	IRC	RWV4J
R115	Minor H.T. O/L adjust	15 ohm 25W variable	IRC	PR25
R116	H.T. O/L adjust	2 ohm 25W variable	IRC	PR25
R117	Tune/Trans dropping	20 ohm 200W WW	STC	62-SU-1L
R118	Tune/Trans dropping	20 ohm 200W WW	STC	62-SU-1L
R119	Tune/Trans dropping	20 ohm 200W WW	STC	62-SU-1L
R120) to) R125)	Not used			
R126	Relay dropping	2K ohm ±10%	IRC	RWL4L
R127	Fil. dropping	10 ohm ±5% 5W WW	IRC	AB-C-1
R128	Fil. dropping	10 ohm ±5% 5W WW	IRC	AB-C-1
R129	Fil. balance	15 ohm 2W variable	Colvern	CLR24-5T
R130	Fil. balance	15 ohm 2W variable	Colvern	CLR24-5T
R131	Fil. dropping	10 ohm 5% 5W WW	IRC	AB-C-1
R132	Fil. dropping	10 ohm 5% 5W WW	IRC	AB-C-1
R133	Min. H.T. bleed	15K ohm 5% 50W WW	IRC	FRW22
R134	T7 Transient voltage suppressing	1.5K ohm 18W carbon	Morganite	712

ITEM	CIRCUIT FUNCTION	DESCRIPTION	SUPP-LIER	SUPPLIER'S TYPE NO.
to R136		(used only when MR16 to MR20 are type RS640)		
R137	S.W.R. alarm phase bridge			
	525- 700 Kc/s	3.3K ±10% 1W carbon	Morganite	AY
	700- 950 Kc/s	2.7K ±10% 1W carbon	Morganite	AY
	950-1250 Kc/s	1.8K ±10% 1W carbon	Morganite	AY
	1250-1610 Kc/s	1.2K ±10% 1W carbon	Morganite	AY
R138	S.W.R. alarm amplitude adjusting	500 ohm 1W variable	STC	SP44490L
R139	S.W.R. alarm sensitivity adjusting	10K 1W variable	STC	SP44490L
	RELAYS AND CONTACTORS			
A	S.W.R. alarm	3200/2 90 ohm centre stable	Carpenter	51PM3/64
B	S.W.R. blocking	2000 ohm 1M/S	STC	5119G.TFS
BL	Blower contactor	240V 50 c/s	Nilsen	OJ15C
BM	Bias marginal	1000 ohm 1M/S	STC	5119AQ.TFS
BR	Blower release	240V 50 c/s 0-1 min	ECE	PT60M1
C	Control	2000 ohm 2M/S	STC	5119CD.TFS
CF	Carrier fail	2000 ohm 2C	STC	5102JX.TFS
D1 to D7	Overload indicators (Later transmitters use second type listed)	(a) Drop shutter OR	STC	4008
		(b) 400 ohm 2M, 1K	STC	5103AVQ.TFS
D8 to D13	Arc back indicators	Drop shutter	STC	4008
DL	Dummy load contactor	240V 50 c/s	AGE	AD-15
DR	R.F. driver overload	50 ohm 1 M/S	STC	5119V.TFS
FL	Filament contactor	240V 50 c/s	Nilsen	OJ15C

ITEM	CIRCUIT FUNCTION	DESCRIPTION	SUPP-LIER	SUPPLIER'S TYPE NO.
H	Hold	5000 ohm 1B, 1C	STC	5102ZT.TFS
HD	H.T. delay	240V 50 c/s 0-1 min	ECE	PT60M
HT1	H.T. starting contactor	240V 50 c/s	Siemens	K915-111-2
HT2	H.T. supply contactor	240V 50 c/s	Siemens	K915-111-2
HTO	High tension overload	50 ohm 1 M/S	STC	5119Y.TFS
LA	Line arc	2000 ohm, 2M, 1C	STC	5103FQ.TFS
LT	L.T. on	2000 ohm 1 M/S	STC	5119G.TFS
LO	Lock out	1000/1000 ohm 2B	STC	5102BHJ.TFS
MA	Modulator A overload	50 ohm 1 M/S	STC	5119Y.TFS
MB	Modulator B overload	50 ohm 1 M/S	STC	5119Y.TFS
MO	Minor H.T. overload	50 ohm 1 M/S	STC	5119Y.TFS
PA	Power amp. overload	50 ohm 1 M/S	STC	5119Y.TFS
RD	Rectifier delay	240V 50 c/s 0-3 min	ECE	PT60M
RDH	Rectifier delay hold	2000 ohm 2C	STC	5102JX.TFS
RLC	Overload counter	150/250 ohm 10M	M&G	ZM53
ST	Start	2000 ohm 1 M/S	STC	5119G.TFS
	SWITCHES			
S1	Mains isolate	45A curve 2	Heineman	3363S
S2	H.T. isolate	30A curve 2	Heineman	3363S
S3	L.T. isolate	8A curve 2	Heineman	3363S
S4	L.T. ON	S.P. toggle	Painton	501085
S5	H.T. ON SH. T delay	Push button black	Acelec	540
S6	H.T. OFF	Push button red)	Indust-rial	
S7	H.T. ON	Push button green)	Interior	
S8	Tune/Transmit	D.P.D.T. Toggle	Painton	501085
S9	Rear Rect. Door	Microswitch	Den Dee	PM1
S10	Rear R.F. Door	Microswitch	Den Dee	PM1
S11	Tube Window	Microswitch	Den Dee	PM1
S12	Front R.F. Door	Microswitch	Den Dee	PM1

ITEM	CIRCUIT FUNCTION	DESCRIPTION	SUPP-LIER	SUPPLIER'S TYPE NO.
S13	Front Rect. Door	Microswitch	Den Dee	PM1
S14	Dummy Load	D.P.D.T. Toggle	Painton	501085
S15	Utility	D.P.D.T. Toggle	Cutler Hammer	7360K5
S16	Multimeter	12 Psn. 2 Bank	Oak	SP29301AE
S17	Air Flow	Microswitch	Den Dee	PM1
S18	Overload lamp reset	Single pole push button black	Rubin	1001S1/R
S19	S.W.R. alarm disable	D.P.D.T. Toggle	Painton	501085
	SOCKETS			
SK1	Crystal	7 pin	STC	SP91563A
SK2	Not used			
SK3	External R.F. input	BNC coaxial	Amphe-nol	UG-290/BU
SK4	R.F. monitor output	BNC coaxial	Amphe-nol	UG-290/BU
SK5	A.F. monitor output	4 pin	Carr-Jones	S-304-AB
SK6	Monitor R.F. input	BNC coaxial	Amphe-nol	UG-290/BU
SK7	Monitor R.F. output	BNC coaxial	Amphe-nol	UG-290/BU
SK8	Monitor	8 pin	Carr-Jones	S-308-AB
	TRANSFORMERS			
T1	P.A. Tank	Prim. 21T, Sec. 9T	STC	20-SU-29
T2	R.F. Line metering	10 turns 10/010 wire wound on ring core Ducon type F4062/2 Q1 material	STC	---
T3	Mon. Output	600 ohm/25K, 25K ohm	STC	CF5223-7
T4	A.F. Input	600 ohm/25K, 25K ohm	STC	CF5223-7
T5	C.F. Choke	40/40H	STC	192-SU-34B
T6	Modulation trans.		STC	74-SU-232A
T7	H.T. Trans.	440V/3,740V line 15kVA	Hanson	RS508-146
T8	Min. H.T. Trans.	240V/378,495V	STC	74-SU-129B
T9	50 Volt supply	240V/10,60V	STC	74-SU-135

ITEM	CIRCUIT FUNCTION	DESCRIPTION	SUPP-LIER	SUPPLIER'S TYPE NO.
T10	Mod. A Fil.	240V/2 x 7.5V	STC	74-SU-132A
T11	Mod. B Fil.	240V/2 x 7.5V	STC	74-SU-132A
T12	Recti. filament	240/5V, 30A	STC	K5631-2
T13	Recti. filament	240/5V, 7A	STC	74-SU-113C
T14	Recti. filament	240/5V, 7A	STC	74-SU-113C
T15	Recti. filament	240/5V, 7A	STC	74-SU-113C
T16	P.A. Fil.	240V/2 x 7.5V	STC	74-SU-132A
T17	Bias Fil.	240V/379,495V	STC	74-SU-129B
T18	R.F. Dr. and 6.3V Fil.	240V/6.3, 5V	STC	74-SU-133
T19	A.F. 2 Fil.	240V/2 x 5V	STC	74-SU-127B
T20	C.F. Fil.	240V/2 x 5V	STC	74-SU-127B
T21	S.W.R. alarm	18 turns centre tapped, 10/010 wire wound on ¾ I.D. ring core Philips type 56-590-27/4E	STC	---
	ELECTRON TUBES			
V1	Xtal Osc.	Beam tetrode	Brimar	807
V2	Isolator	Beam tetrode	Brimar	807
V3	R.F. Driver	Radiation Cooled Tetrode	Eimac	4-125A
V4	Power amplifier	Air Blast triode	Eimac	3X2500F3
V5) V6)	1st A.F. Amp.	Low noise pentode	Mullard	EF37A
V7) V8)	2nd A.F. Amp.	Radiation cooled Tetrode	Eimac	4-125A
V9) V10)	Cath. Foll.	Radiation cooled Tetrode	Eimac	4-125A
V11) V12)	Modulators	Air-blast-cooled triode	Eimac	3X2500F3
V13) to) V18)	H.T. rectifiers	H.C.M.V. rectifiers	STC	872A
V19	Monitor Diode	Vacuum diode	Brimar	6X5GT
	MISCELLANEOUS ELECTRICAL ITEMS			
X1	Crystal assembly	65°C oven containing crystal with required nominal frequency	AWA	3R3535

ITEM	CIRCUIT FUNCTION	DESCRIPTION	SUPP-LIER	SUPPLIER'S TYPE NO.
		±.0015%. Parallel resonant with 75pF circuit capacitance		
X2	Attenuator	0-16 db in 0.5 db steps with infinity position 600 ohm	Trans-mission Products	101ES
X3	Blower	1450 r.p.m., 3 phase ½ H.P.	Richard-son	R.H. Upcast
X4	Input attenuating	Pad, 16 db 600 ohm consists of	IRC	BTA
		2 x 1K ohm ±5% carb.	IRC	BTA
		2 x 820 ohm ±5% carb.	IRC	BTA
	MISCELLANEOUS MECHNAICAL ITEMS			
	Air cooling	Air filter. Dry type 2 off	Vokes	RS520-30

SECTION 8 - INSTALLATION

For shipment, the crystal, all tubes, the relay box, and all components mounting in the base of the transmitter are removed and packed separately. Loose controls and cable ends are tied to prevent damage.

Upon arrival the equipment should be unpacked and carefully examined for damage. The H.T. transformer and filter capacitors should be installed and connected up, followed by the blower making sure that the frame is earthed. The modulator coupling capacitor should next be installed followed by the H.T. choke, modulation transformer and choke as shown in the photographs in Section 11. The Mod. transformer is placed at the rear with terminals 1, 2, and 3 at the rear. Terminals 3 and 4 on the Mod. choke are to the front. Particular care should be taken to ensure that the connections to the modulation transformer and choke are correct in order that the feedback and partial modulation connections are not reversed.

Cable entry to the transmitter is by means of bushes at the bottom of the rear centre panel. The three mains and neutral should be connected to the mains terminals, to the right of the centre panel, and the protective cover replaced.

Speech entry, the cabinet earth, monitoring and other facilities required are connected to the terminal boards to the right of the centre panel.

For local operation the remote L.T. ON terminals 10 and 11, the remote H.T. OFF, terminals 13 and 14 and the terminals 16 and 17 should be bridged. Where no remote R.F. current indication is required, the terminals 7 and 8 should be bridged. Terminals 18 and 19 are for an external gate circuit interlock and should also be bridged.

All transformer primaries should next be set to the tap closest to the nominal supply voltage. T9 and T18 are located at the bottom of the centre dividing panel. T10, T11, T19 and T20 are located in the rear of the R.F. Modulator cabinet. It should be noted that adjustment of the rectifier filament transformers is by auto-transformer action via the primary of T16.

Check that all shorting wires on meters have been removed.

The unit is now ready for testing as in Section 9.

SECTION 9 - TESTING AND OPERATION

9.1 Preparation

(a) On completion of installation, check all wiring for correct termination and continuity. NOTE: Make certain that the mains supply is disconnected while these tests are being carried out.

(b) Check that the fan and all shafts move freely.

(c) Check that all bolts and nuts are tight.

(d) Check that the fuses are correctly loaded.

(e) Check that transformer tappings, potentiometers, capacitors, coils relays and spark gaps are adjusted in accordance with the tables in Section 10.

9.2 Control Circuits

(a) Do not install any tubes. Check that the filament leads are insulated from earth and from each other.

NOTE: Some of the filament transformer secondary windings have a low resistance path to earth via a centre tap.

(b) Close the MAINS ISOLATOR and L.T. ISOLATOR circuit breakers. Install the relay box. With the 50 VOLT CONTROL fuse, F2, installed and mains supply connected, the MAINS ON lamp should light.

(c) Ensure that the H.T. ISOLATOR circuit breaker is open and close the L.T. ON switch. Check that the blower rotates in the correct direction. (The fan should rotate anticlockwise when viewed from the air entry). If incorrect, reverse two of the leads to the motor or the mains input. Check that the filament voltages are approximately as shown in the table below.

(d) Insert the crystal and all tubes. The plastic pipes for the 3X2500F3 tubes should be brought close to the filament stems so as to direct a stream of air

into the annular space between the inner and outer filament connectors. Replace the air box front panel and secure by means of the quick fasteners.

(e) Close the LT ON switch and check that all tube filaments and the crystal heater lamp, LP1, now come on. If mercury vapour rectifiers are fitted, allow 30 minutes for them to be "baked out". During this interval, the tube filament voltages should be measured with an accurate A.C. voltmeter, at the base pins of the tubes. The voltage should be within 5% of the nominal voltages as below.

Tube	Voltage	Limits
3X2500F3	7.5	7.13 to 7.87
4-125A;872A	5.0	4.75 to 5.25
807; EF37A	6.3	6.0 to 6.6

Note that the TIME DELAY EXPIRED lamp LP4 lights after the filaments have been on for 2 minutes, where mercury vapour rectifiers are fitted or 20 seconds where silicon rectifiers are supplied. With all doors closed and the blower operating, the GATES CLOSED lamp, LP5, should be alight.

Check that the filament hours meter is working.

(f) Insert the MIN. H.T. fuse, F1, and place the TUNE/TRANSMIT switch, S8, in the TUNE position and check that the DUMMY LOAD switch is closed.

(g) Press the H.T. ON button; it should be possible to hear the H.T. contactor HT1 close. Switch to TRANSMIT, and the second H.T. contactor will close lighting the H.T. ON lamp, LP3.

(h) Switch to TUNE, turn the OUTPUT COUPLING to zero and close the H.T. ISOLATOR. Set the A.F. ATTENUATOR to infinity and the remaining controls to the settings given in Section 10, and press the H.T. ON button.

The transmitter should now be tuned as in Section 9.4.

(j) When fully loaded to 5.5kW carrier power the H.T. voltmeter should read 4.8KV. If the H.T. is not 4.8KV then the primary taps on the H.T. transformer, T-7, should be adjusted to give this voltage.

9.3 Audio Frequency Circuits

(a) Connect terminals 3 and 8 on the input transformer T4 to earth. Set the A.F. ATTENUATOR to a convenient value, say 5 db. Connect a low distortion audio frequency oscillator to the program input terminals 1, 2, and 3, via an accurately calibrated 600 ohm balanced attenuator.

(b) Couple a detector type distortion and noise meter to the monitor output plug PL6. If an external modulation monitor is available it should be used (an R.F. monitor socket is located under the centre partition) and its output fed to the distortion and noise meter. If no Mod. monitor is available, a cathode ray oscilloscope should be used.

Start the transmitter and feed a 1000 c/s signal to the audio amplifier. Adjust the level to 50% modulation. Set the gain control of the distortion and noise meter to a convenient reading and note the reading.

Remove the earthing leads from the input transformer. Decrease the attenuator setting until the same level of modulation is obtained. The difference in the attenuator settings will be the amount of feedback applied to the A.F. Amplifier and should be approximately 12 db.

(c) Measure the distortion and check that it is less than 3% over the audio range 50 to 7,500 c/s.

(d) Using a vacuum-tube voltmeter to ensure a constant output from the oscillator, measure the response using 1000 c/s at 50% modulation as reference. The response should be within ±1 db over the audio range 30 to 10,000 c/s.

(e) Using 100% modulation at 1000 c/s as reference, check that the noise level of the carrier is at least 60 db down.

If the noise level is above -60 db it may be because the potentiometers R129 and R130 are out of adjustment.

(f) Check, distortion, response, and noise from the built-in detector.

(g) Record all circuit settings and meter readings for the unmodulated condition as well as for selected depths of modulation. Conduct a heat run with the carrier modulated approximately 40%.

(h) Switch off the transmitter and switch from DUMMY LOAD to the aerial. Operate the transmitter and check that it performs satisfactorily under these conditions.

The equipment is now ready to carry normal program.

9.4 Overload Relay and Bias Marginal Adjustment

Overload relays may be adjusted by passing D.C. from a battery and rheostat through the overload resistors associated with each relay. However, due to the presence of large components of current in the low audio frequencies, a dynamic method of adjustment is to be preferred for setting the P.A. and Modulator overloads. The D.C. method is used for all others.

When setting up under dynamic conditions, the P.A. should be overcoupled to produce the required current listed in the table below and the transmitter should then be modulated to 100% with 30 c/s tone. The overload adjusting resistor R27 should be set to make the P.A. overload relay operate at or below the current listed. The modulator overload resistors R61 and R62 are set by overmodulating with normal carrier using a modulating frequency of 50 to 70 c/s.

The following table lists the overload relay settings, those for V4, V11, and V12 being initial settings only as the final settings are obtained using the dynamic method explained above.

Overload Function	Adjusting Resistor	Current Setting
R.F. Driver V3	R21	0.25 amperes
P.A. V4	R27	1.8 amperes
Modulator V11	R61	0.8 amperes
Modulator V12	R62	0.8 amperes
High Tension	R116	3.5 amperes
Minor High Tension	R115	0.5 amperes

The bias marginal relay should be adjusted with the transmitter operating normally. Adjust R97 until the transmitter high tension is just at the point of releasing.

9.5 Frequency Changing

NOTE: When making adjustments inside the transmitter the MAINS ISOLATOR should always be switched off.

(a) When the transmitter is to be set up for a new carrier frequency the correct components, shown in the components list Section 7, should be installed.

The components involved are: C21, C23, C29, C31 and R137.

If the required new frequency varies widely from that which the exciter was tuned to it may be necessary to alter the tap on coil L2 or the number of gangs in C14.

(b) Switch to DUMMY LOAD and move the TUNE/TRANSMIT switch to TUNE.

(c) Reduce the OUTPUT COUPLING to zero and start the transmitter.

With the multimeter set to the D.R. Grid position, the ISOLATOR TUNE knob is adjusted to peak the driver grid current.

(d) Set the multimeter to PA GRID and peak the PA GRID current by adjusting the DRIVER TUNE knob.

If the maximum P.A. grid current should occur when the driver tuning capacitor, C22, is at a minimum, the tap on the driver tuning coil L5 should be moved so that there is one turn less in circuit and vice versa.

(e) The power amplifier should now be tuned by adjusting the P.A. TUNING control for minimum P.A. cathode current.

If the minimum P.A. cathode current occurs when the P.A. tuning capacitor C30 is at minimum capacitance, the tap on the P.A. tuning coil T1, should be moved so that there is one less turn in circuit and vice versa.

(f) Neutralising of the power amplifier. If the P.A. is correctly neutralised, the P.A. GRID current should decrease when the P.A. TUNING is detuned either side of the setting at which minimum P.A. CATHODE current is obtained. If this is not so, the neutralising capacitor C24 should be adjusted as follows:

If the P.A. GRID current increases when the P.A. tuning control is rotated clockwise (i.e. C30 toward minimum capacitance) the stage is under-neutralised and the neutralising capacitor C24, should be increased and vice versa.

(g) Output Coupling. Move the TUNE/TRANSMIT switch to TRANSMIT and increase the coupling until the P.A. CATHODE current is approximately 1.5A. Check the P.A. TUNING as the coupling is increased.

If it is necessary to rotate the P.A. TUNING control clockwise (i.e. less capacitance) for correct tuning the inductance of the output coupling coil, T1, should be increased slightly and vice versa.

NOTE: If the output is tuned to the DUMMY LOAD the load itself should be tuned to the new frequency.

(h) R.F. LINE Meter. Compare the reading of the R.F. LINE meter, M-3, with the calibrated R.F. ammeter

M-4 in series with the dummy load. If necessary, adjust the potentiometer, R29, in small increments by trial and error to make the R.F. LINE meter read correctly.

(j) Harmonic Tuning Coil. The harmonic tuning coil, L8, serves the dual purpose of stabilising the power amplifier, and by tuning to a low harmonic of the carrier, increases the P.A. Anode efficiency to 80% or more.

The harmonic tuning coil is adjusted until maximum anode efficiency is obtained. The P.A. anode current is the difference between the cathode current and grid current. The anode power input is the product of the anode current and anode voltage. The power output is measured from the product of line current squared and known dummy load resistance. The anode efficiency is then the ratio of output power to anode input power. Tappings on L8 are adjusted, one turn at a time, until the anode efficiency is a maximum. A check should be made of the P.A. grid and anode circuit tuning at various settings of L8.

Check that the P.A. and Driver circuits are still tuned.

(k) Adjust the OUTPUT COUPLING to give the rated 5.5kW output and check all meter readings with the representative values given in Section 10.

Check the carrier frequency of the transmitter against a frequency standard and adjust to the exact value with the frequency adjusting capacitors C1 and C5.

Switch the transmitter off.

9.6 Normal Operation

To start the equipment once the transmitter has been tuned correctly it is only necessary to operate the L.T. ON switch S-4, and after the rectifier delay relay has operated, as indicated by the TIME DELAY EXPIRED lamp, the H.T. ON button may be pressed to energise the H.T. supplies.

To switch off it is only necessary to open the L.T. ON switch or press the H.T. OFF button and then open the L.T. ON switch.

NOTE: Once the transmitter has been placed in normal service, the MAINS ISOLATOR should be left closed (except during periods of maintenance) in order to maintain the crystal oven in the R.F. exciter at a constant temperature.

Each time the transmitter is started a check should be made of all meter readings to ensure that no abnormalities exist.

9.7 Maintenance

The routine maintenance will obviously depend on whether or not the transmitter operates unattended, however, it is desirable to record all meter readings at least twice daily if this is possible.

9.7.1 Weekly Routine

(a) The importance of keeping the equipment free from dust can not be over emphasised. In addition to a cleaning rag a vacuum cleaner will be found most useful.

(b) Remove and clean the dry type air filters mounted on the rear doors. Where the dust is of a dry sandy nature it should only be necessary to shake or gently tap on the side of the filter to remove the dust. More finely divided dust particles may be removed by blowing from the clean side of the filter with compressed air or with a vacuum cleaner.

(c) Clean the glass of all tubes.

(d) Clean all insulators.

(e) Check the operation of the air flow switch.

(f) Check that the overload relays, when manually operated, cause their respective indicators to work.

(g) Check that the control relays and contactors operate smoothly and correctly.

(h) Check the pilot lamps and replace if burnt out.

(j) Inspect the blower motor for any signs of overheating of the windings or bearings.

(k) Check the output power, audio frequency response, distortion and noise.

(l) Inspect all items for loose connections or faulty contacts. The following items should be attended to at monthly intervals.

9.7.2 Monthly Routine

(a) Clean the contacts of 3000 type telephone relays with a burnishing tool.

(b) Clean with carbon-tetrachloride and lubricate sparingly with paraffin oil the studs and wiper arms of the input attenuator.

9.7.3 Yearly Routine

At yearly intervals the blower motor bearings should be lubricated and the electrolytic capacitors C82, and C83 should be replaced.

9.7.4 Mercury Vapour Rectifiers

When a tube is received it will have deposits of mercury on all parts of the tube due to handling. Any tube which has been displaced from its normal operating position should have its filaments operated for 30 minutes before applying H.T.

9.7.5 Care of Thoriated Tungsten Filament Tubes

In making connections care should be exercised not to subject the terminals to bending or twisting stresses which may damage the seals. Dust should not be permitted to collect on tubes since this will result in an increased operating temperature.

The tubes must be protected from shock and vibration and the glass surfaces must not be scratched or subjected to thermal shock, such as laying a hot tube on a cold cement surface.

The thoriated tungsten filaments should be operated at the rated voltage as measured at the tube terminals. It should be noted that a decrease in filament voltage of 5% will result in a decrease in emission of 25% and no increase in life may be expected from this procedure.

In cases where severe overloads have caused loss of emission the activity of the filament may frequently be restored by operating the filament only for 10 minutes at 30% over-voltage and then for 1 hour at normal voltage. If the overload is sufficient to soften the tube the liberated gas will rapidly destroy the filament and no recovery is possible.

It is recommended that spare and working tubes be interchanged regularly so that no tube remains idle for more than 4 months. Provision is made in the transmitter for the spare H.C.M.V. tube to have its filament heated ready for use.

9.7.6 Care of Silicon Diode Rectifiers

Transmitters supplied with silicon rectifiers in the H.T. supply may have a type of rectifier (RS640AF) which has to be protected against transient voltages. Avalanche rectifiers (RAS508AF) are also in use in the later transmitters and these are designed to withstand transient voltages. Where RS640AF rectifiers are used, the transient voltages produced in the H.T. transformer T7 are reduced in amplitude by the use of shunt R-C networks. Both types of rectifiers are protected against over-voltages due to unequal voltage distribution across the series connected rectifiers by shunting each rectifier with a capacitor.

With the relatively large number of rectifiers in use in the H.T. rectifier, some diodes may be expected to fail during the first year of operation.

Since silicon diode failures almost invariably end as short circuits, failures may be difficult to detect in service. It is recommended that the reverse resistance of each diode in the assembly be recorded at intervals under standard conditions. Failure of a diode is indicated by zero or near zero reverse resistance.

Due to the safety factors involved, provided not more than 15% of the diodes in each arm have failed, no action need be taken. Where more than 15% of the diodes have failed, the failures should be replaced.

An alternative method of detecting failed diodes is to pass a forward current of, say, 3 amperes through each arm and measure the required D.C. voltage to produce 3 amperes. This is a direct measure of the number of good diodes in each arm.

SECTION 10 - CIRCUIT SETTINGS AND METER READINGS

DATE TESTED .....

Transmitter Serial No. .....

Frequency .....

Circuit Settings

C21 .....

C23 .....

C24 .....

C29 .....

C31 .....

C32 .....

L5 .....

L8 .....

T12 Prim. .....

Sec. .....

Tuning

Isolator .....

Driver .....

Power Amp. .....

Coupling .....

Transformer Tap

T7 .....

T8 .....

T9 .....

T10 .....

T11 .....

T12-15 .....

T16 .....

T17 .....

T18 .....

T19 .....

T20 .....

Arc Gaps

Mod. Trans. Terms.

1-2 ..0.2 inches.....

2-3 ..0.2 inches.....

4-5 ..0.2 inches.....

Mod. Choke Terms.

1-2 ..0.2 inches.....

3-4 ..0.2 inches.....

Measurements

Artificial Aerial .....

V1 Grid R.F. Volts .....

V1 Screen D.C. Volts .....

Overloads

R21 and D.R. .....

R27 and P.A. .....

R61 and M.A. .....

Overloads (cont'd)

R62 and M.B. .....

R115 and M.O. .....

R116 and HTO .....

R97 and BM .....

PERFORMANCE

Frequency	30	50	100	400	1 kc	3 kc	5 kc	7.5 kc	10 kc
Response db									
Distortion % 100% Mod.									
Distortion % -2 db Mod.									
Distortion % -6 db Mod.									
Noise Level ref. 100% Mod.									
Input level for 100% Mod.									

METER READINGS

Frequency of Modulation

Modulation	0%	40%	100%
Mod. A			
Mod. B			
P.A.			
XTAL K			
ISOL K			
DR G			
DR S			
DR K			
PA G			
CFA K			
CFB K			
AF2A K			
AF2B K			
AF1A A			
AF1B A			
RF LINE			
HT SUPPLY			
MAINS SUPPLY			
RF AMPS			
BIAS SUPPLY			
MIN.H.T. SUPPLY			

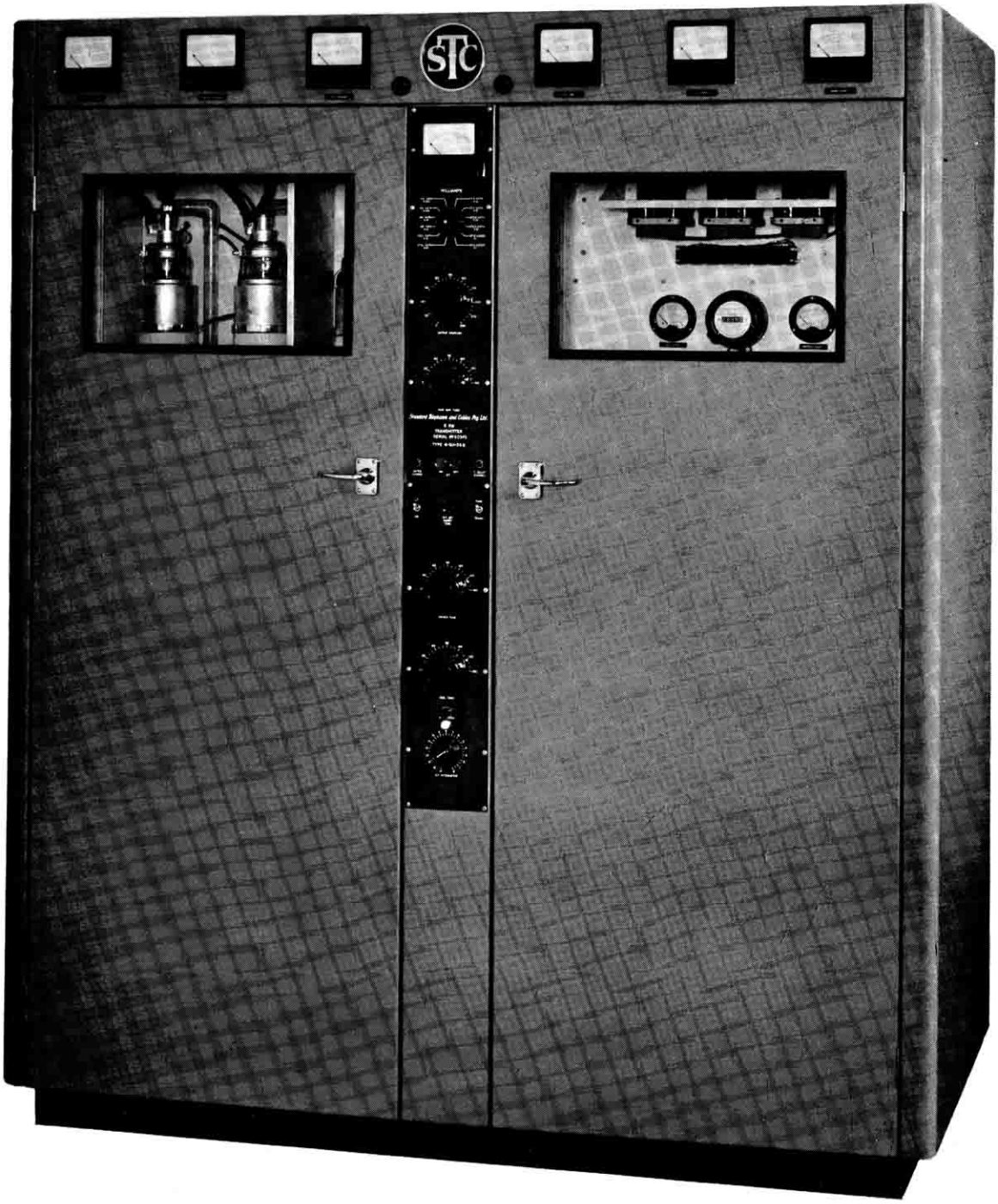

5kW M.F. TRANSMITTER
TYPE 4-SU-55B

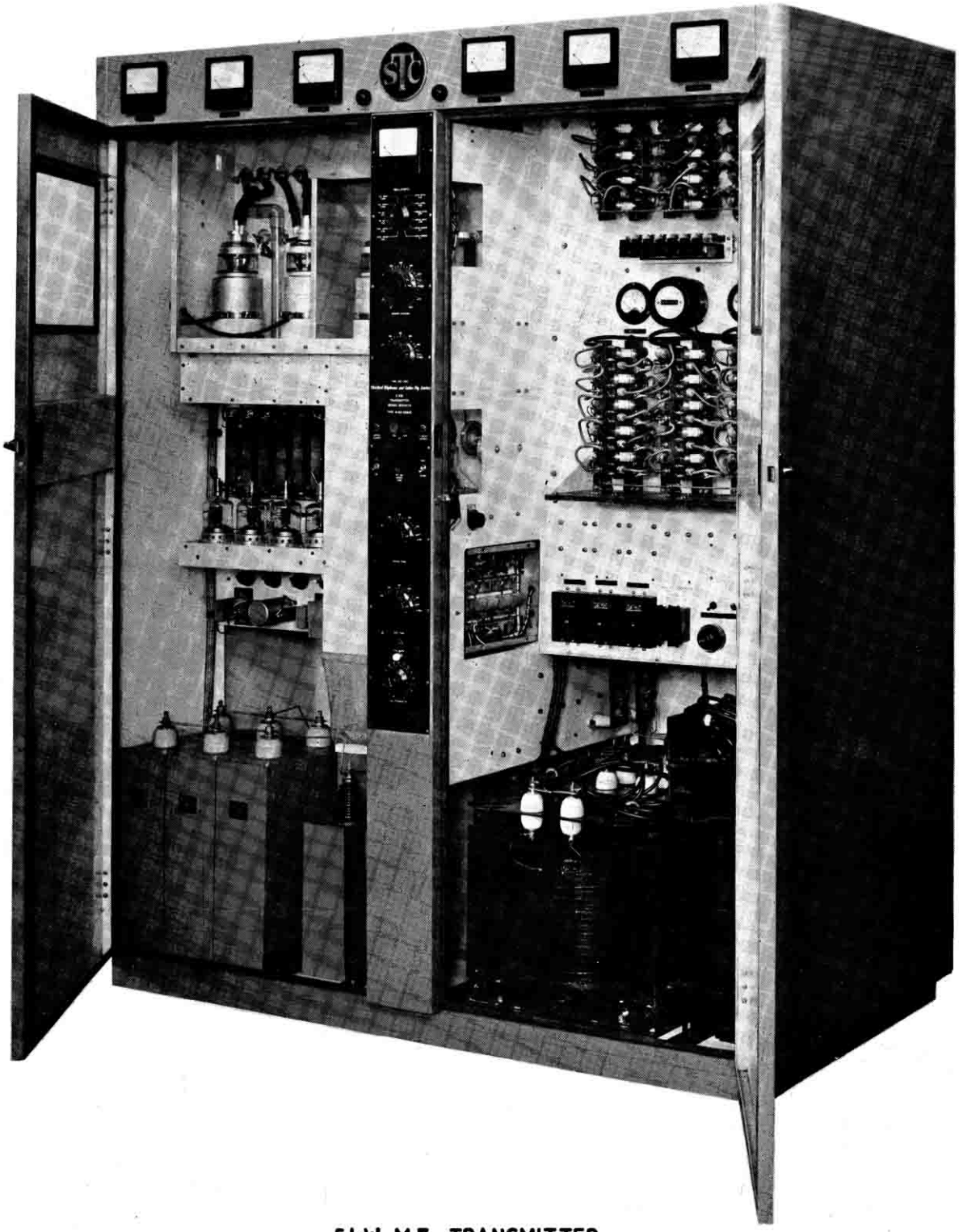

5kW M.F. TRANSMITTER
TYPE 4-SU-55B

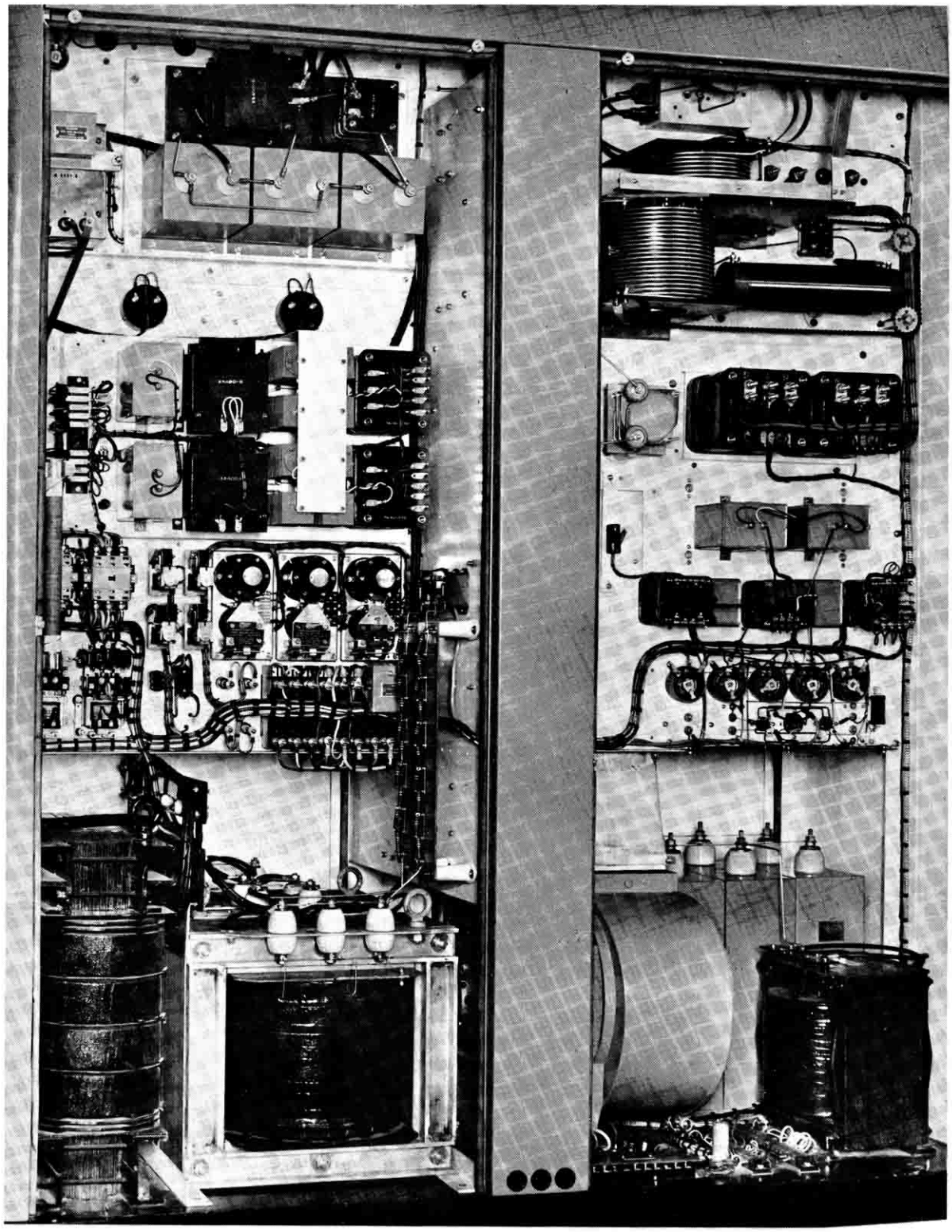

5kW M.F. TRANSMITTER TYPE 4-SU-55B
REAR VIEW OF CABINET.

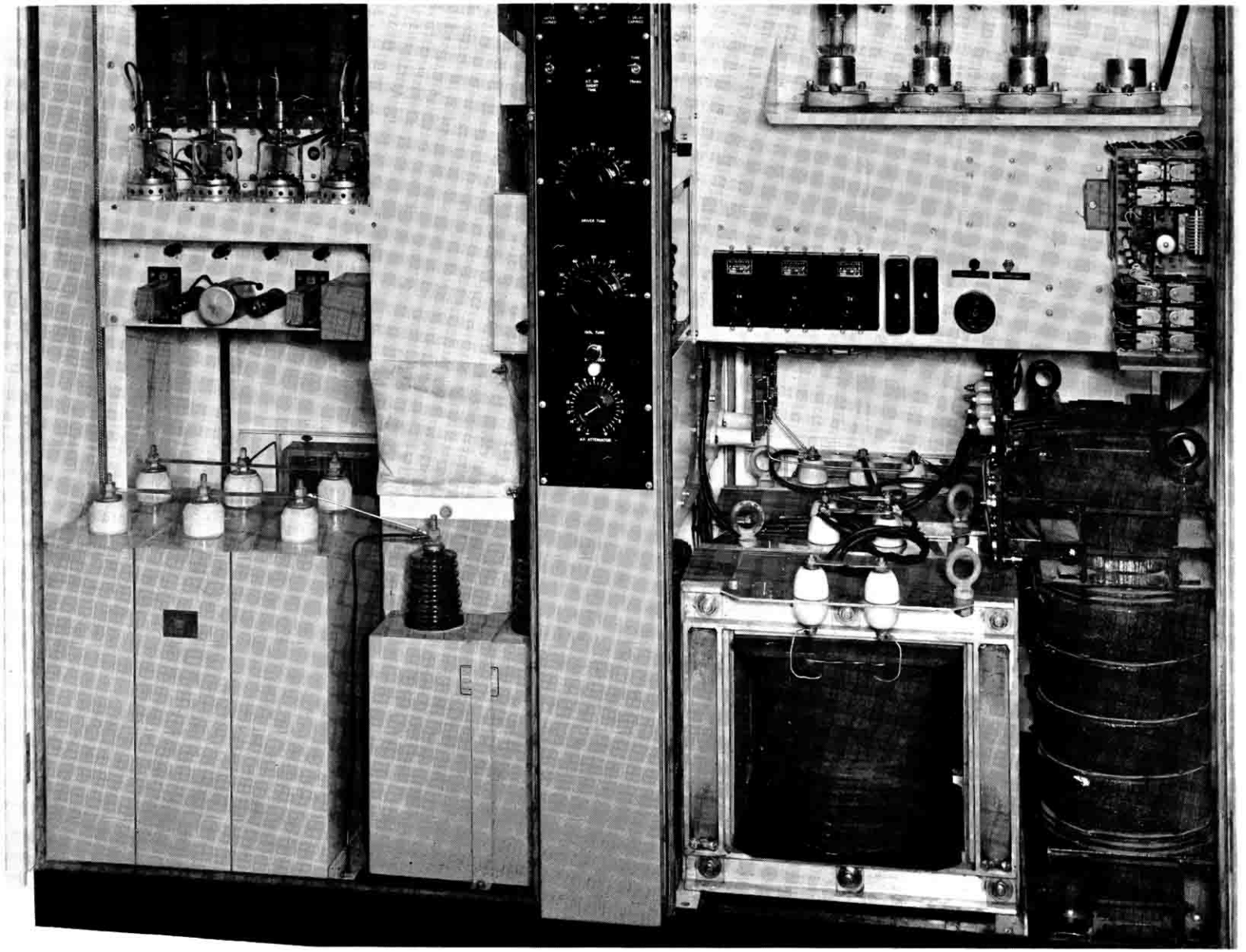

5kW M.F. TRANSMITTER TYPE 4-SU-55B
BOTTOM OF CABINET, FRONT VIEW.

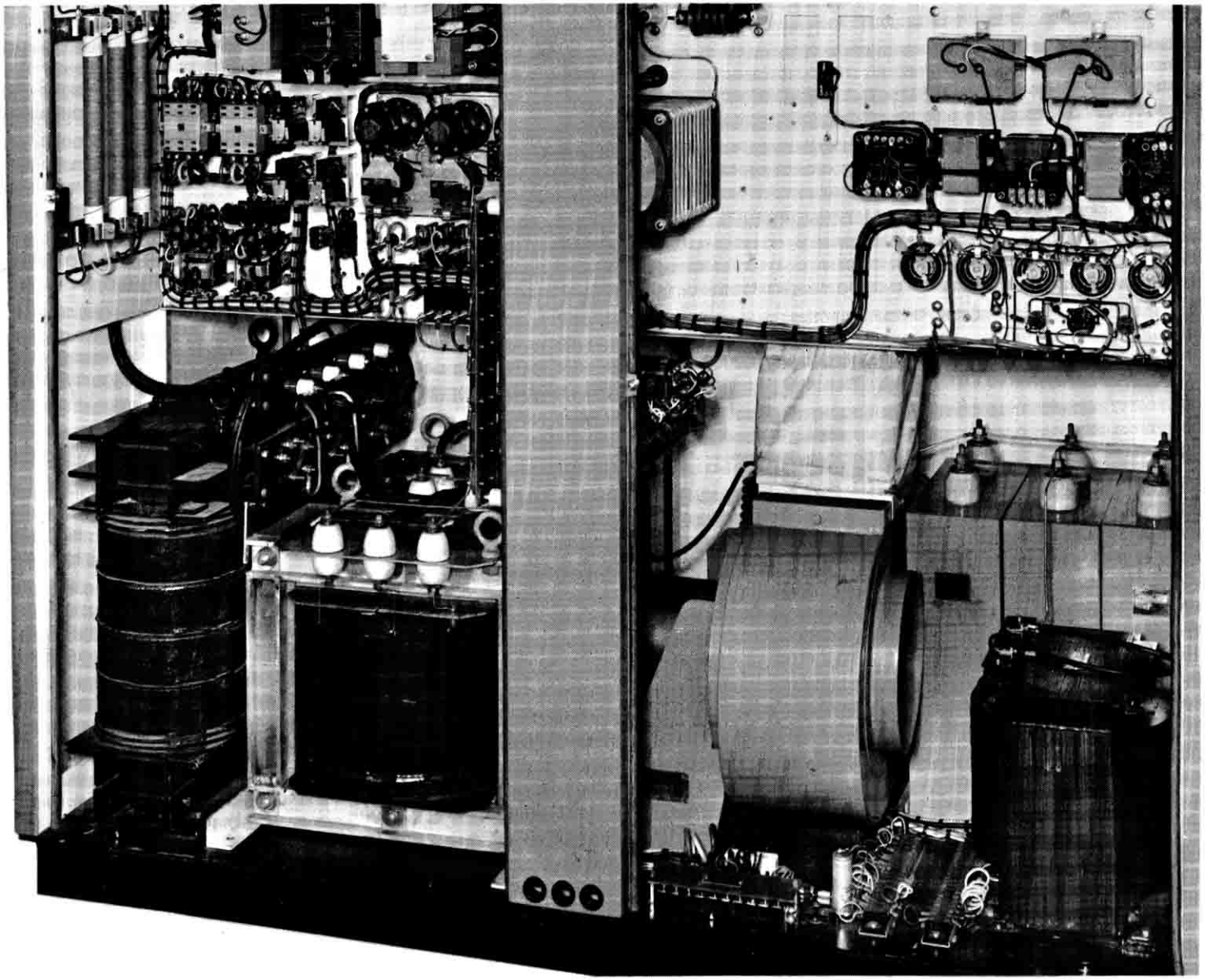

5kW M.F. TRANSMITTER TYPE 4-SU-55B
BOTTOM OF CABINET, REAR VIEW

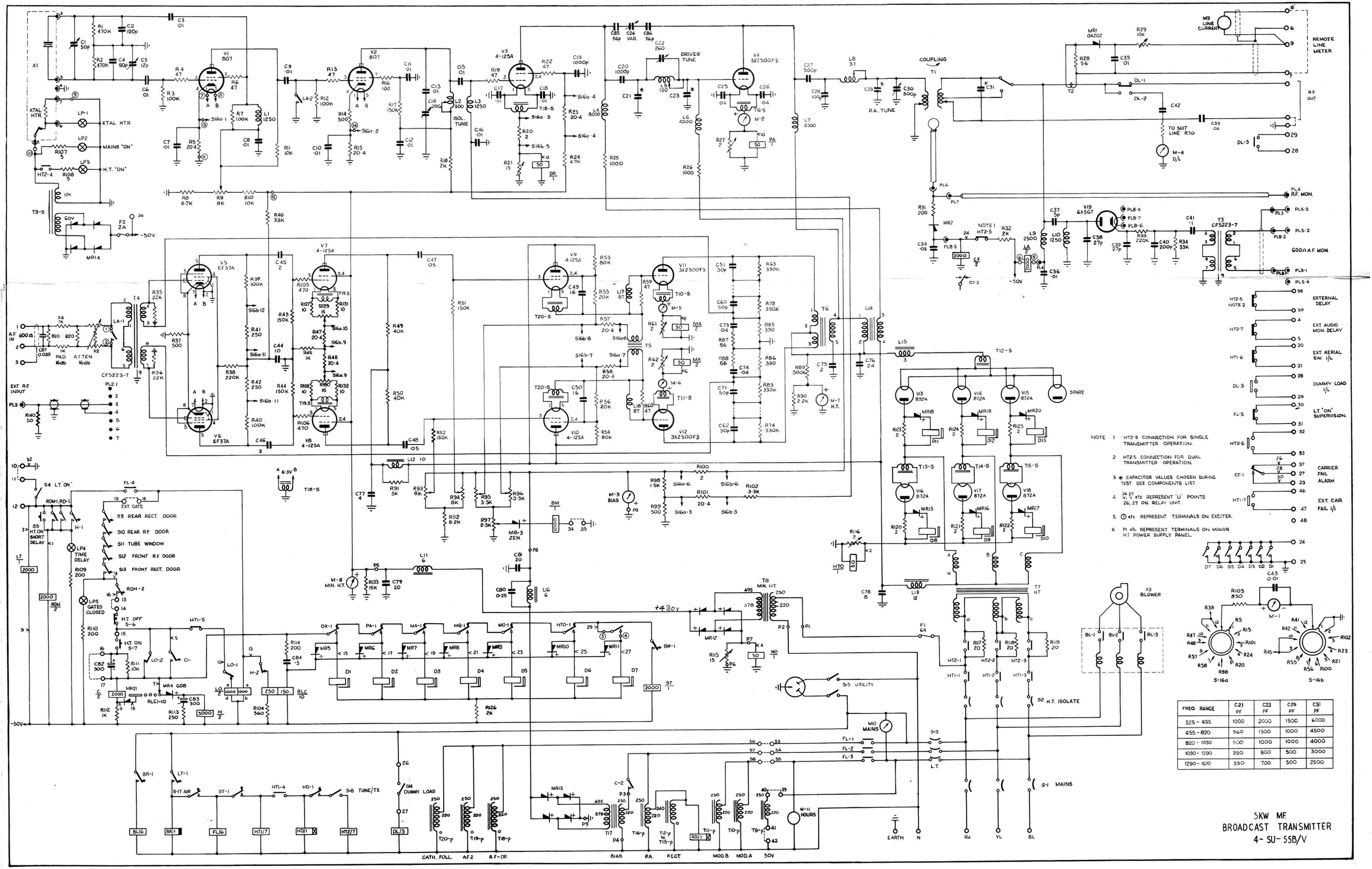

NOTE 1 HT2·5 CONNECTION FOR SINGLE TRANSMITTER OPERATION.

2 HT2·5 CONNECTION FOR DUAL TRANSMITTER OPERATION.

3. ✱ CAPACITOR VALUES CHOSEN DURING TEST SEE COMPONENTS LIST.

4 26, 27 etc REPRESENT 'U' POINTS 26, 27 ON RELAY UNIT.

5 ① etc REPRESENT TERMINALS ON EXCITER.

6 P1 etc. REPRESENT TERMINALS ON MINOR H.T. POWER SUPPLY PANEL.

FREQ. RANGE	C21 PF	C23 PF	C29 PF	C31 PF
525 - 655	1000	2000	1500	6000
655 - 820	560	1300	1000	4500
820 - 1030	500	1000	1000	4000
1030 - 1290	390	800	500	3000
1290 - 1610	330	700	500	2500

5KW MF
BROADCAST TRANSMITTER
4-SU-55B/V

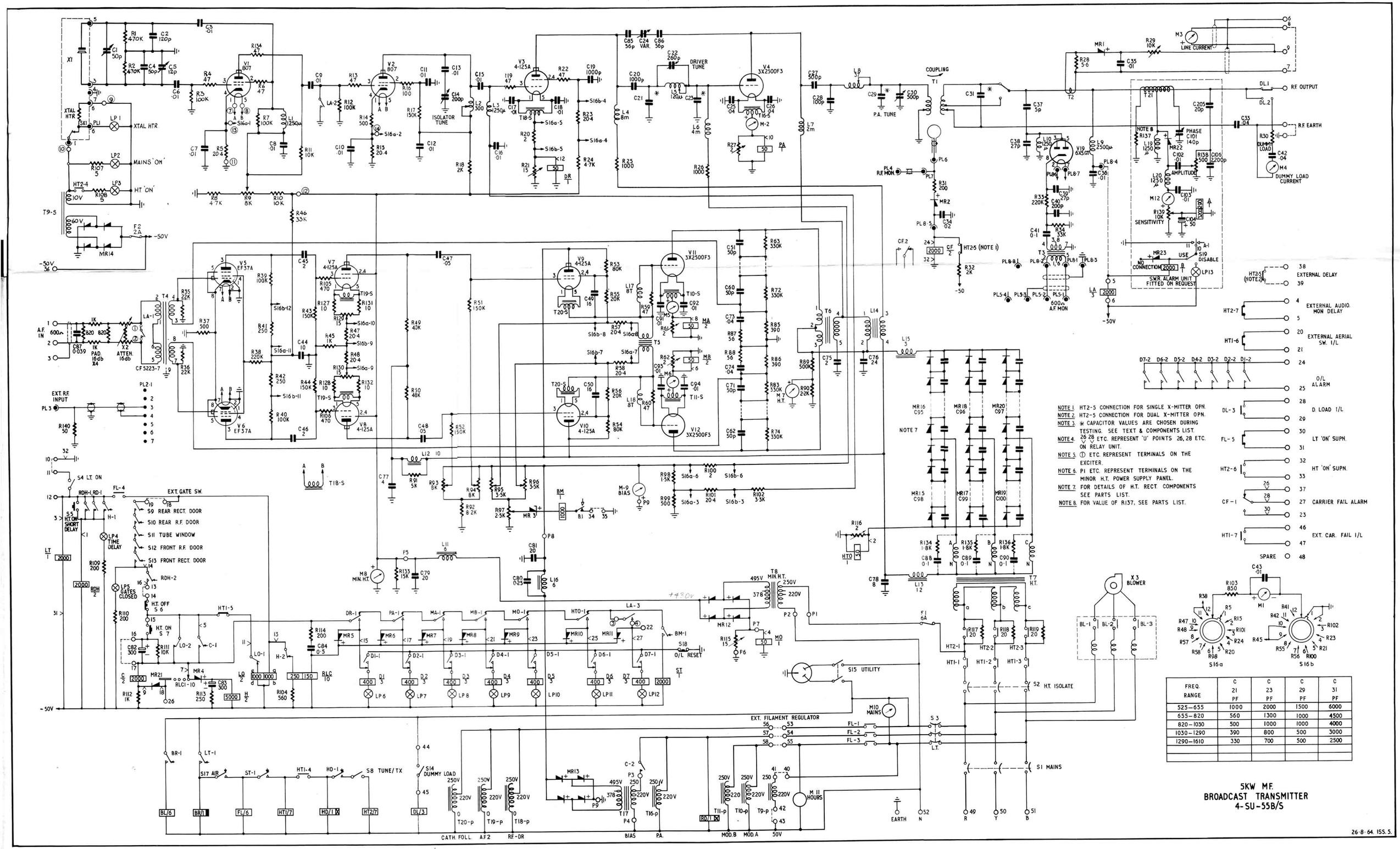

NOTE 1. HT2-5 CONNECTION FOR SINGLE X-MITTER OPN.
NOTE 2. HT2-5 CONNECTION FOR DUAL X-MITTER OPN.
NOTE 3. ✱ CAPACITOR VALUES ARE CHOSEN DURING TESTING. SEE TEXT & COMPONENTS LIST.
NOTE 4. 26 28 ETC. REPRESENT 'U' POINTS 26, 28 ETC. ON RELAY UNIT.
NOTE 5. ① ETC. REPRESENT TERMINALS ON THE EXCITER.
NOTE 6. P1 ETC. REPRESENT TERMINALS ON THE MINOR H.T. POWER SUPPLY PANEL.
NOTE 7. FOR DETAILS OF H.T. RECT. COMPONENTS SEE PARTS LIST.
NOTE 8. FOR VALUE OF R137, SEE PARTS LIST.

FREQ. RANGE	C 21 PF	C 23 PF	C 29 PF	C 31 PF
525–655	1000	2000	1500	6000
655–820	560	1300	1000	4500
820–1030	500	1000	1000	4000
1030–1290	390	800	500	3000
1290–1610	330	700	500	2500

5KW M.F. BROADCAST TRANSMITTER 4-SU-55B/S

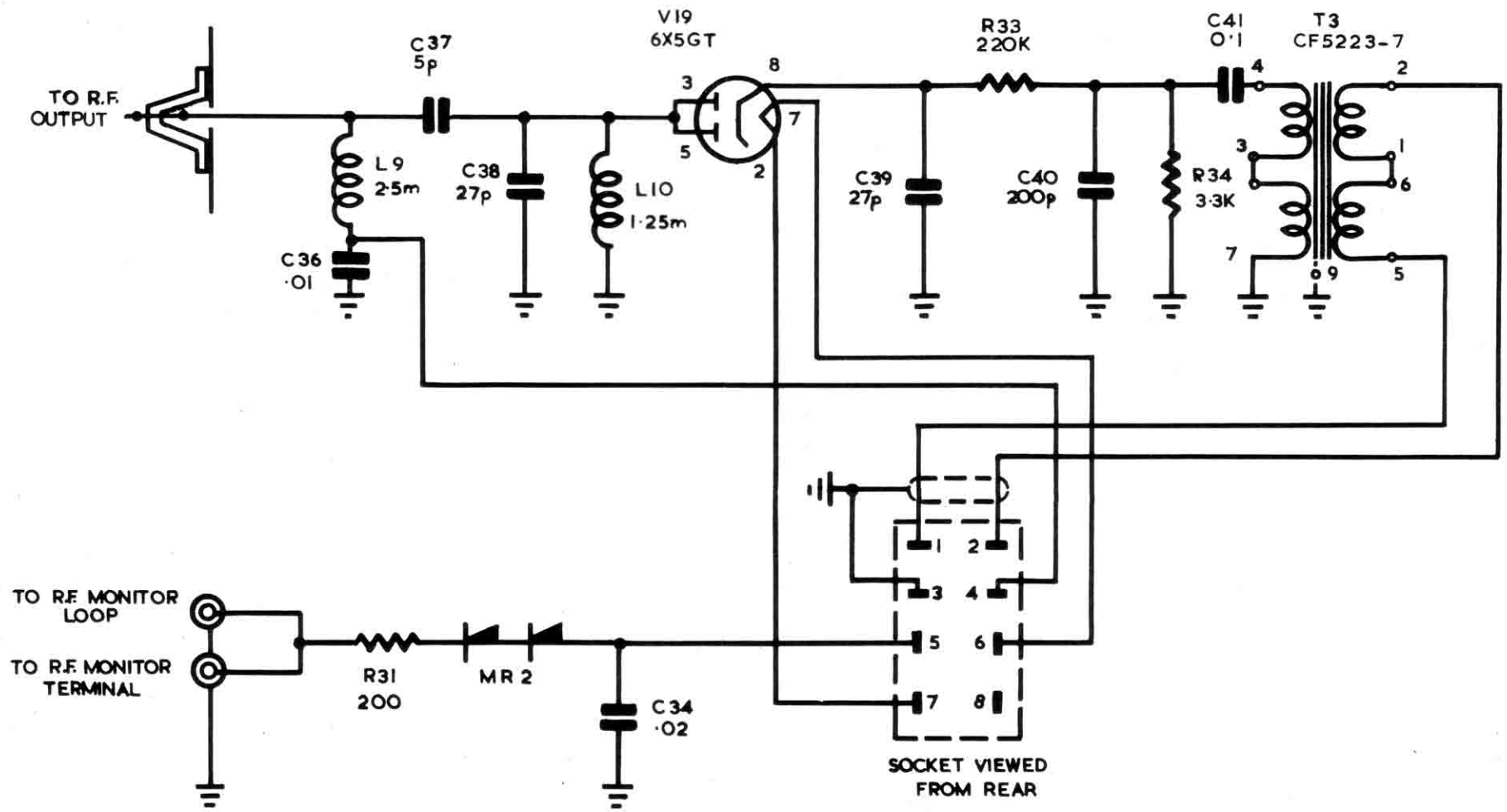

TERMINAL.	DESTINATION.	COLOUR.
1	EXT. TERM 5	BLACK.
2	EXT. TERM 4	RED.
3	EARTH	SHIELD.
4	R.F. EXC. TERM 5	WHITE.
5	HT2 · 5	YELLOW.
6	6·3V	RED/WHITE.
7	6·3V	BR./WHITE.
8	BLANK.	—

A.F. MONITOR SCHEMATIC
171-SU-17B.

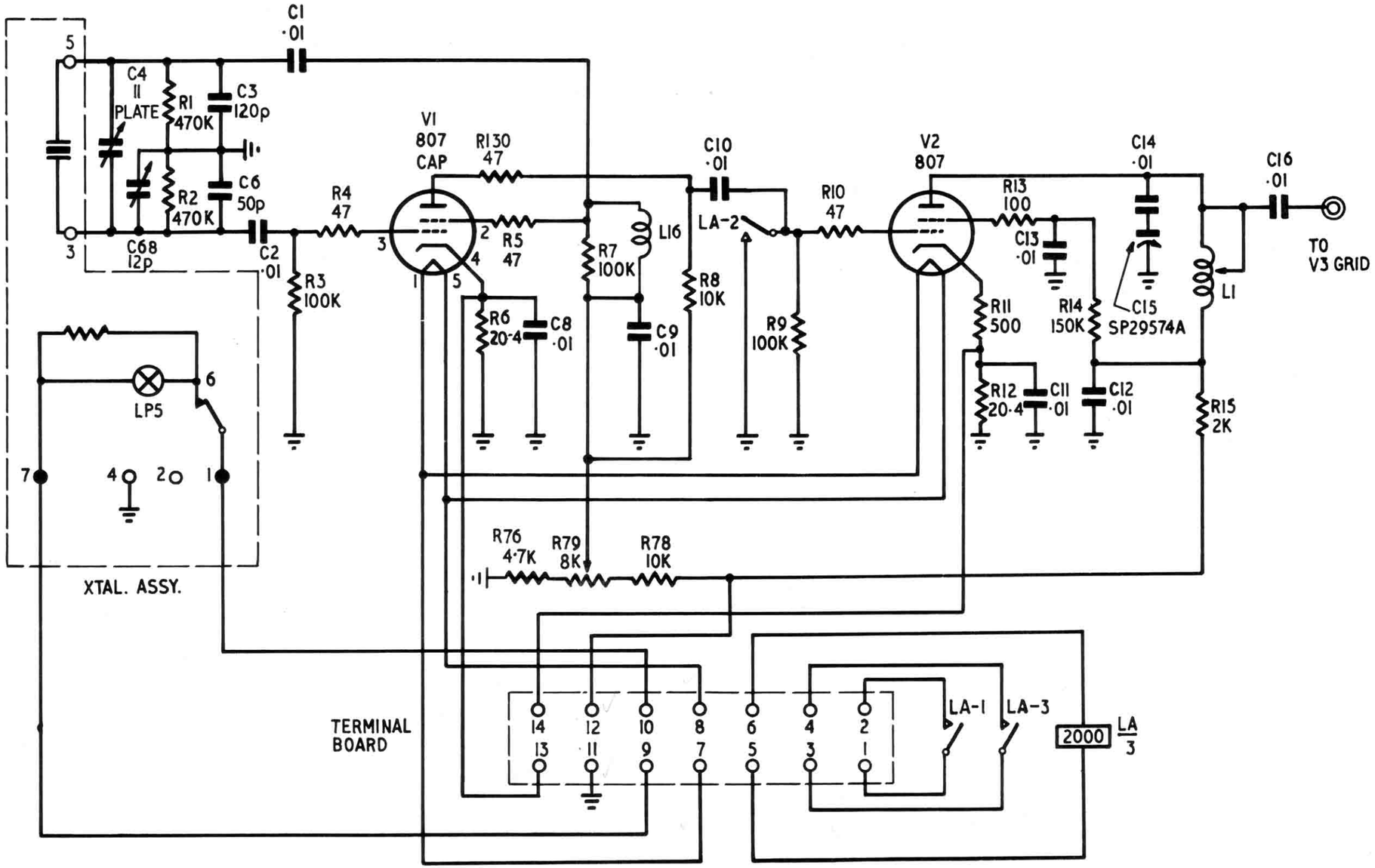

TERMINAL	DESTINATION	COLOUR
1	L.P. FILTER 1	BLACK
2	L.P. FILTER 2	RED
3	EARTH	BLACK
4	D7 a	WHITE
5	A.F. MON PIN 4	WHITE
6	-50V	ORANGE
7	T5 – S 6·3V	BR/WHITE
8	T5 – S 6·3V	YEL/WHITE
9	T3 – S 10V EARTH	BLACK
10	T3 – S 10V	WHITE
11	MAIN EARTH	BLACK
12	MIN. H.T.	RED
13	SW16 – A1	BLUE
14	SW16 – A2	OR/WHITE

R.F EXCITER SCHEMATIC
181-SU-16A

ISSUE 2

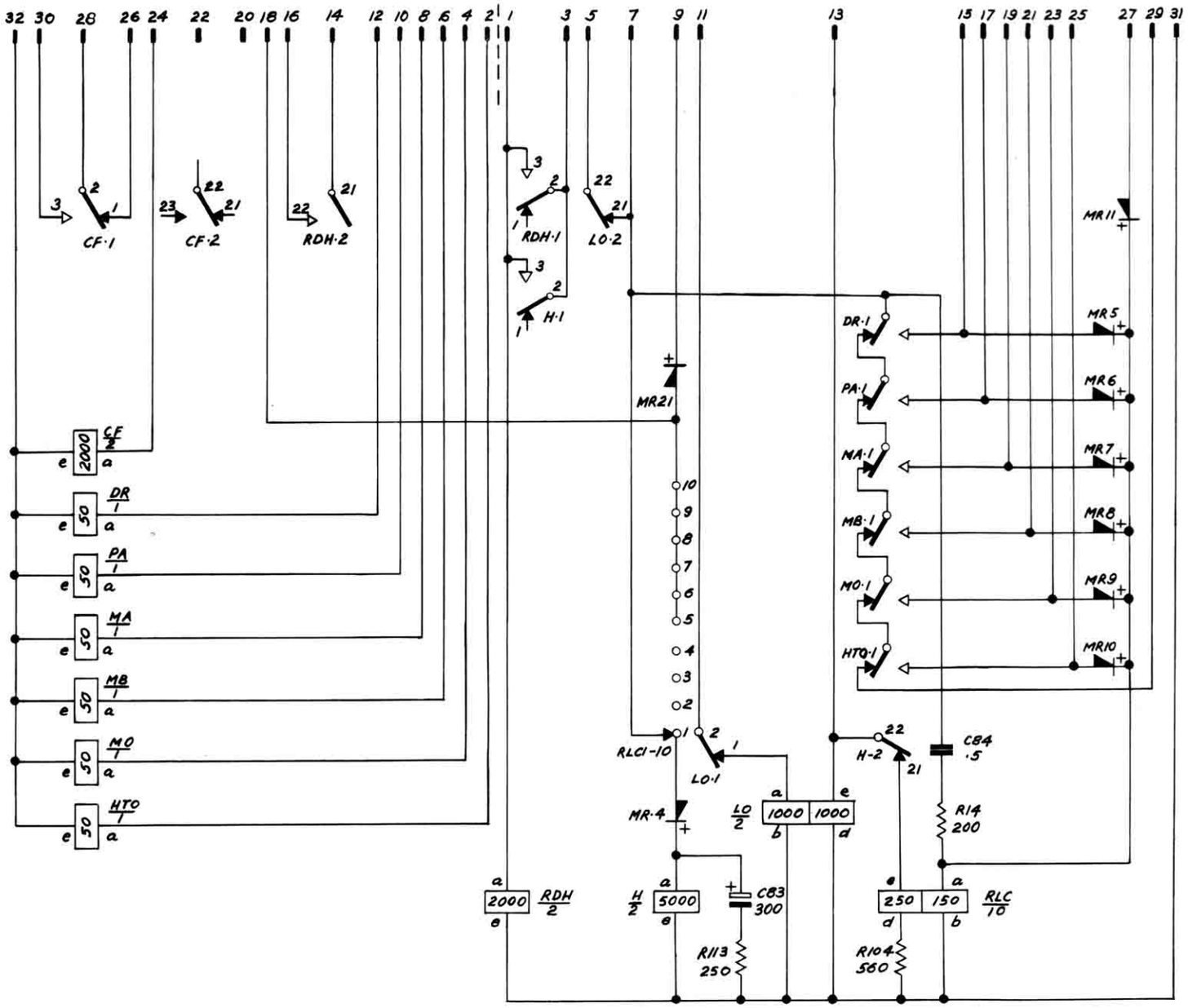

ITEM	DESCRIPTION				
C83	300 µF	DUCON		EMG 1570	
C84	0·5 µF	UCC		PMP	
R104	560 Ω	10%	3 WATT	I.R.C.	RWV4J
R113	250 Ω	10%	3 WATT	I.R.C.	RWV4J
R114	200 Ω	10%	3 WATT	I.R.C.	RWV4J
MR 4	300 V	P.I.V.	S.T.C.	RS240	
" 5	"	"	"	"	
" 6	"	"	"	"	
" 7	"	"	"	"	
" 8	"	"	"	"	
" 9	"	"	"	"	
" 10	"	"	"	"	
" 11	"	"	"	"	
" 21	"	"	"	"	
RDH	2000 Ω	2C	S.T.C.	5102 JX	TFS.
H	5000 Ω	1B, 1C	S.T.C.	5102 ZT	TFS.
LO	1000/1000 Ω	2B	S.T.C.	5102 BHJ	TFS.
DR	50 Ω	1MS.	S.T.C.	5119Y	TFS.
PA	"	"	"	"	"
MA	"	"	"	"	"
MB	"	"	"	"	"
MO	"	"	"	"	"
HTO	"	"	"	"	"
RLC	150/250 Ω	10M	M&G	ZM53	
CF	2000 Ω	2C	S.T.C.	5102 JX	TFS.

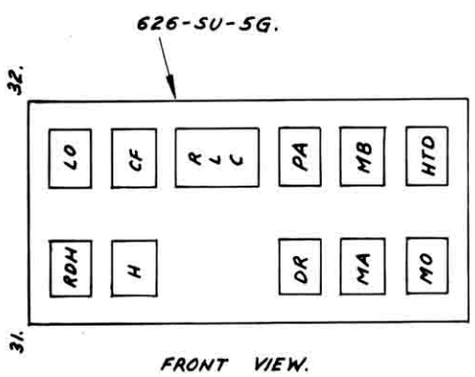

FRONT VIEW.

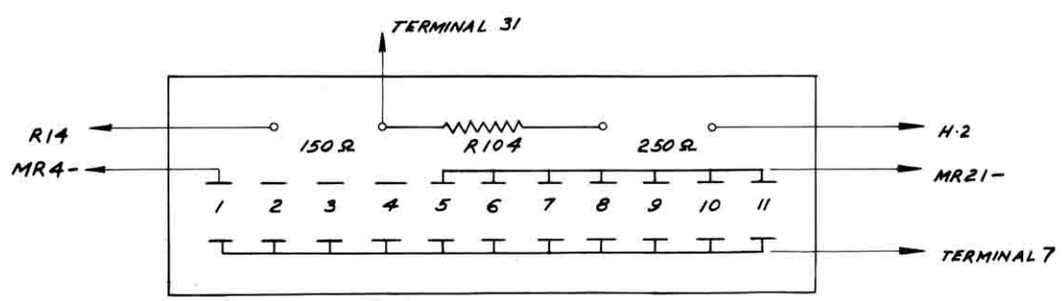

RLC/10 WIRING SIDE

RELAY UNIT
609-SU-39C