Autogram/CRL

AC-8 Audio Console

Autogram/CRL

AC–8 Mono/Stereo Audio Console

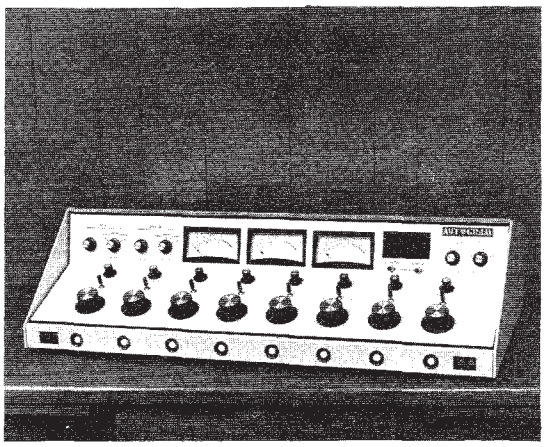

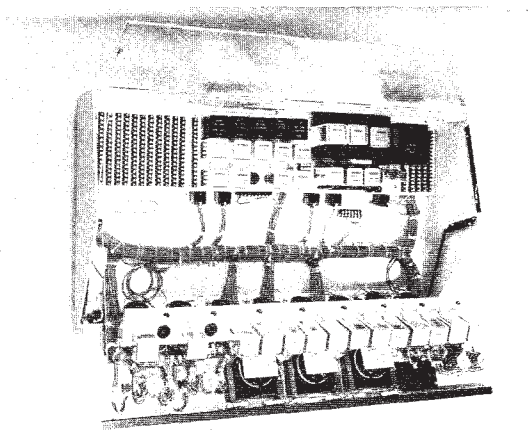

MOUNTING & DIMENSIONS:

Table top with bottom or back cable entry
Height: 10 in.; 25.4 cm.
Depth: 20 in.; 50.8 cm.
Width: 37¼ in.; 94.6 cm.

Autogram/CRL

920 Edison Ave
Benton, AR 72015
Phone: +1 480.893.7080
Fax: +1 480.776.0357
Email: support@autogram-crl.com

SPECIFICATIONS

INPUT CHARACTERISTICS:

Sources:
26 stereo inputs – customer's option as to use by plug-in modules
1 high level cassette

Impedances:
Microphone, 200 or 50 ohms
High level 10K ohm bridge or 600 ohm terminate
External monitor 10K ohm

Levels:
Microphone -65 to -50 dBm
High level -10 dBm to +10 dBm
External monitor - 10 dBm to +10 dBm

Noise:
Program/audition -120 dBm
Monitor -110 dBm

Power Source:
117 or 230 Vac 50-60 Hz single phase

OUTPUT CHARACTERISTICS:

Outputs (Depends on modules used)
1 Stereo program
1 Stereo audition
1 Monophonic program
2 Monitor amplifiers
2 Headphone amplifiers
1 Cue amplifier

Impedances:
Program/audition 600 ohm balanced or unbalanced – 10K ohm balanced or unbalanced
Monitor 4-16 ohm unbalanced
Cue 4-16 ohm unbalanced

Levels:
Program/audition or mono: +8 dBm nominal – +24 dBm maximum
Monitor – 15 watts RMS into 8 ohm load
Cue and headset – 1 watt into 8 ohm load

Frequency Response:
Program/audition ±1 dB 30 to 15K Hz
Monitor ±1.5 dB 30 to 15K Hz

Distortion:
Program/audition less than 0.5% THB
Monitors less than 1.5% THD

AUTOGRAM AC-8 AUDIO CONSOLE

I. FUNCTIONAL DESCRIPTION

The AC-8 console, as normally configured, consists of 8 stereo mixing channels, a stereo program channel, a stereo audition channel, and a monaural program channel. All audio panel controls control right and left channels simultaneously.

All input channels can be adapted for use with low-level balanced microphone inputs, high-level balanced line inputs, or high level bridging inputs by selecting the appropriate input accessory module.

Audio input terminals and program outputs are located at the left end of the console and monitor outputs and control functions are located at the right end of the console and are accessible from the top. Optional input connectors, such as the XL type, can be supplied for direct plug-in connections.

Each stereo mixer position consists of a 2-position INPUT SELECT switch, a rotary stereo MIXER level control with CUE position, an AUDITION/PROGRAM key switch, and a push-button control switch. The pushbutton control switch is used for remote starting of cartridge machines or other remote control functions requiring a momentary contact closure.

Two stereo inputs are provided to each stereo mixer channel for channels 1 through 6. The 2-position INPUT SELECT switch connects either of the two stereo inputs, input A or input B, or two input accessory modules. The input accessory module may be a microphone preamplifier, a high-level input bridging transformer, or a high-level input matching transformer. The outputs of the monaural switch and balance control to a stereo MIXER level control attenuator. The outputs from the MIXER level attenuator are applied to an AUDITION/PROGRAM key switch that connects the mixer channel output to the stereo audition mixer channel buses, disconnects the outputs (center off position), or connects the outputs to the program mixer channel buses. Signals placed on the program mixer buses are amplified by mixer amplifiers and applied to program line level controls inside the console. Outputs from the program line level controls are amplified by two program line amplifiers and applied to output transformers to provide the 600-ohm balanced stereo program outputs. Stereo program line outputs are monitored by the left channel and right

channel VU meters on the front panel. Signals placed on the audition mixer buses are amplified by an additional set of amplifiers in the same manner as the program channels and may be monitored by left and right VU meters by placing VU meter switch in AUDITION.

Two 6-position selector switches are provided to switch stereo inputs to mixer channels 7 and 8. The stereo outputs from the REMOTE LINES SELECT switch 7A, are connected to mixer 7 with INPUT SELECT switch in A position. The stereo outputs from the REMOTE LINE SELECT switch 8A are connected to mixer 8 with INPUT SELECT switch in A position. Input 7B and 8B are single stereo inputs.

The MIXER level control attenuators provide a CUE position in the maximum counterclockwise position of the control. In this position, the mixer channel stereo outputs are combined and applied to a monaural cue bus. The signal on the cue bus is amplified by a cue amplifier and provided as an unbalanced output for driving a cue speaker or headphones.

The AC-8 consoles provide a monaural line level output that is the sum of the left and right program channels or the left and right audition channels, depending upon position of the mono mix switch. The left and right channels are connected through a level control, line amplifier, and output transformer to provide the balanced monaural line output. The panel mounted monaural channel VU meter and monaural headphone jack are connected across the monaural line output.

Two monitor amplifiers can be switched to monitor the stereo program channels, the stereo audition channels, and off-the-air stereo channel, or stereo external source. The MONITOR SELECT switch selects the stereo inputs to the monitor amplifiers, and the stereo MONITOR LEVEL control adjusts the output levels. The outputs of the monitor amplifiers are connected through two muting relays to allow connection to studio, lobby, and control room speakers.

The AC-8 console provides a headphone PHONES SELECT switch, a stereo PHONES LEVEL control, and two headphone amplifiers that allow stereo headphone monitoring of the program channel outputs, the audition channel outputs, off-the-air stereo channel, an external stereo source, or the output of the MONITOR SELECT switch.

Table 1 AC-8 Consoles, Basic Components.

EQUIPMENT	MODEL	PART NUMBER	CHARACTERISTIC
Input Accessory Modules:			
Microphone preamplifier	MPA-1	124-0052-855	Matches microphone impedance and amplifies low-level output of microphone.
Matching transformer	MT-1	124-0052-894	Input device that isolates input from console when input level is high enough to drive console directly.
Bridging transformer	BT-1	124-0052-893	Non-loading input accessory used when input audio level is high enough to drive console directly.
Output Amplifiers:			
Line amplifier	LA-1	124-0052-858	Amplifier to drive isolation transformer.
Cue amplifier	CA-1	124-0052-861	Amplifies cue bus audio to drive cue speaker.
Headphone amplifier	HA-1	124-0052-860	Amplifies monitor audio to drive headphone.
Monitor amplifier	MA-1	124-0052-859	Amplifies monitor audio to drive monitor speakers.
Mixer Amplifier	MXA-1	124-0052-857	Active combining network amplifier.
Power Supply	PS-1	124-0052-862	Bipolar 24-Vdc rectifier regulator

II. INSTALLATION

The arrangement of studio and control room facilities determines the location of the console in a particular station. Carefully plan the placement of equipment and wiring before beginning installation. Placement of the unit is not critical but approximately 4 inches (10.16 cm) should be left at the rear of the unit to allow for adequate ventilation. For access to all internal terminal boards, lift the front edge of the unit top and fold back; the front panel can then be pulled forward and down. The top and front panels are held in the fully open position by retaining cables. Approximately 28 inches (81.12 cm) front to back is required for the fully open unit. 71.12cm

During installation the following rules should be followed to eliminate grounding problems.

A. Ground input and output cable shields at console end only. However when running signal lines from a balanced source, ground the shield at the source.

NOTE

If noise on signal input cables is high, it may be necessary to ground shields at both ends to reduce noise levels.

B. Use standard audio shielded twisted pair with insulated cover.

C. Low- and high-level audio leads should be separated from power and control wiring.

D. Use 1- to 2-inch ground strap to connect console chassis to common ground.

E. Use shielded power leads if noise level is high.

CAUTION

Be sure that cable shields do not come in contact with anything but grounding terminals.

III. WIRING INSTRUCTIONS

Console location and type of installation determine the position of the input, output, and primary power wiring. Refer to figure 1 for access hole locations. Openings at the rear and bottom of the console provide access to terminal boards for incoming and outgoing leads. If the wiring is to enter from the bottom of the console, corresponding holes must be drilled through the table top for wiring access.

CAUTION

> Connect primary power only after all other connections are made.

Refer to tables 2-1 through 2-3 for a list of input/output and control function terminal boards, and terminal functions. To ensure proper phasing of stereo signal lines, it is important to connect each twisted shielded pair to the terminals the same way. For example, if a twisted pair is used with red and white wired, always wire the red wire to + terminal, the white wire to the C (common) terminal, and the shield to the S (shield) terminal. The S terminal connects directly to the console chassis. No separate grounding is necessary.

A. Input Connections

Terminal boards TB1 through TB12 provide input audio connections for the AC-8 console. Each audio connection contains a + terminal, a common terminal C, and a shield terminal S. The S terminal is connected to the console chassis ground.

B. Mixer Channels 1 Through 8

The audio input impedance and level characteristics of a mixing channel are determined by the input accessory modules. The input may be a low-level input, bridging high-level input, or terminating high-level input. Multiple switched inputs are provided for each mixer channel, and all inputs to a mixer channel must be the same type. For example, low-level, high-level bridging, or high-level terminating.

C. Low-Level Inputs

The microphone preamplifier, MPA-1, is used for the low-level mixer channel. The MPA-1 preamplifier is factory wired with a 200-ohm input impedance and accepts input levels of -65dBm to -50dBm. The input impedance may be

changed to 50 ohms by making wiring changes on the console-mounted accessory socket. To change the mixer channel input impedance to 50 ohms, remove the connection between terminals 2 and 3 of the console-mounted accessory socket, install a connection between terminals 1 and 2, connections must remain on terminals 1 and 4.

D. High-Level Inputs - Bridging

The bridging transformer, BT-1, input accessory module provides a bridging input for the mixer channel. The bridging input provides a 10,000-ohm input impedance, which will accept input voltage levels corresponding to -10 dBm to +10 dBm across a 600-ohm terminated line (0.246 volt to 2.46 volts rms).

E. High-Level Inputs - Terminating

The matching transformer, MT-1, input accessory module provides a 600-ohm terminating line input for the mixer channel. The terminating input will accept input levels of -10 dBm to +10 dBm.

F. Remote Inputs

Two 6-position selector switches are provided for switching stereo inputs to mixer channels 7 and 8 of the AC-8 console. All inputs switched into a mixer channel must be the same type. Normally mixer channels 7 and 8 will employ the MT-1 matching transformer or the BT-1 bridging transformer input accessory modules. Table 2-1 provides the input terminal connections.

G. External Monitor Inputs

The AC-8 console contains provisions for an external stereo monitor input and an off-the-air stereo monitor input. Each of these inputs has a 10,000-ohm balanced input impedance.

H. Cassette Input

The AC-8 console contains two miniature phone jacks located in the lower right-hand corner of the front panel area. These jacks terminate in wiring pigtails located inside the console adjacent to the mixer input area. These cables enable the console installer to connect the cassette inputs to any suitable mixer input during the process of the

installation. The wires are labeled for identification. Care should be taken to properly phase the left and right channels to the selected input.

I. Stereo/Monaural Input Switching

A stereo/monaural input switch for each mixer is located on the back of the front panel adjacent to the plug-in input accessory module sockets. This switch must be placed in either the S (stereo) or M (monaural) position as dictated by the type of input selected for the applicable mixer. In the monaural position, the output of the right channel is disconnected and the left channel input is connected to both left and right channel outputs of the mixer.

J. Program and Audition Line Outputs

Connections to the 600-ohm isolated program and audition line outputs are made through terminal board TB2 on output amplifier chassis A2. Refer to table 2-2 for connections.

K. Monitor Speaker Outputs

Two separate stereo monitor speaker output connections are provided through two separate muting relays for studio and/or remote speaker connections. Refer to table 2-3 for audio connections. Muting relay controls are connected as described in paragraph entitled "Muting Relay Connections", which follows.

NOTE

Do not ground either conductor of the monitor speaker lines--use twisted pair shielded cable 18 gauge or larger.

L. Cue Output

A single cue output is provided to drive a customer-furnished cue speaker. Refer to table 2-2 for connections.

NOTE

Do not ground either conductor of the cue speaker line.

M. Stereo Headphone Output

The consoles contain a separate jack located in the lower left-hand corner for headphone monitoring. The output will accept headphone impedances of 8 ohms to 50 kilohms, eliminating the need of special headphones or impedance matching transformers.

N. Muting Relay Connections

Two muting relays are provided for silencing monitor speakers when a program/audition switch is placed in the PROGRAM or AUDITION position. The relays must be strapped to the selected program/audition switch for operation. Refer to table 2-3 for control connections. For example, to mute the speakers with the PROGRAM/ AUDITION MIXER 1 switch in the PROGRAM position, connect the "mute key ground" line for 1 PGM to the "mute relay to ground" terminals of the relay to which the monitor speaker is connected. If the monitor speakers to be muted are connected to relay K1, jumper AC-8 TB16-1 to TB16-13.

O. Pushbutton Control Functions

The front panel momentary pushbutton controls are wired to terminal boards and are used to start externally located equipment. The pushbuttons are to be used only with contact closure dc switched equipment. No ac should be wired through the pushbutton switches. Refer to table 2-3 for connections to the pushbutton switch contacts through the terminal boards. Each pair of connections represents a single set of normally open contacts. Contact rating is 1 ampere maximum.

Table 2-1 AC-8 Audio Input Connections

FUNCTION			ASSY NO	INPUT TB ( )	TERMINAL NO		
CONTROL	SW POS	CHAN			±	C	S
MIXER							
1	A	L	A5	1	1	2	3
1	A	R	A5	2	1	2	3
1	B	L	A5	3	1	2	3
1	B	R	A5	4	1	2	3
2	A	L	A5	1	4	5	6
2	A	R	A5	2	4	5	6
2	B	L	A5	3	4	5	6
2	B	R	A5	4	4	5	6
3	A	L	A5	1	7	8	9
3	A	R	A5	2	7	8	9
3	B	L	A5	3	7	8	9
3	B	R	A5	4	7	8	9
4	A	L	A5	1	10	11	12
4	A	R	A5	2	10	11	12
4	B	L	A5	3	10	11	12
4	B	R	A5	4	10	11	12
5	A	L	A5	1	13	14	15
5	A	R	A5	2	13	14	15
5	B	L	A5	3	13	14	15
5	B	R	A5	4	13	14	15
6	A	L	A5	5	1	2	3
6	A	R	A5	6	1	2	3
6	B	L	A5	7	1	2	3
6	B	R	A5	8	1	2	3
7	A1	L	A5	5	4	5	6
7	A1	R	A5	6	4	5	6
7	A2	L	A5	5	7	8	9
7	A2	R	A5	6	7	8	9
7	A3	L	A5	5	10	11	12
7	A3	R	A5	6	10	11	12
7	A4	L	A5	5	13	14	15
7	A4	R	A5	6	13	14	15
7	A5	L	A5	7	4	5	6
7	A5	R	A5	8	4	5	6
7	A6	L	A5	7	7	8	9
7	A6	R	A5	8	7	8	9
7	B	L	A5	7	10	11	12
7	B	R	A5	8	10	11	12

Table 2-1 AC-8 Audio Input Connections (Cont)

FUNCTION			ASSY NO	INPUT TB ( )	TERMINAL NO ±	C	S
CONTROL	SW POS	CHAN					
MIXER							
8	A1	L	A5	9	1	2	3
8	A1	R	A5	10	1	2	3
8	A2	L	A5	9	4	5	6
8	A2	R	A5	10	4	5	6
8	A3	L	A5	9	7	8	9
8	A3	R	A5	10	7	8	9
8	A4	L	A5	9	10	11	12
8	A4	R	A5	10	10	11	12
8	A5	L	A5	11	1	2	3
8	A5	R	A5	12	1	2	3
8	A6	L	A5	11	4	5	6
8	A6	R	A5	12	4	5	6
8	B	L	A5	11	7	8	9
8	B	R	A5	12	7	8	9
MONITOR/ PHONES SELECT							
	EXTERNAL	L	A5	7	13	14	15
	AIR	R	A5	8	13	14	15
		L	A5	9	13	14	15
		R	A5	10	13	14	15

Table 2-2 AC-8 Audio Output Connections

OUTPUT	CHANNEL	ASSY NO	OUTPUT TB ( )	TERMINAL NO		
Program out	L	A2	2	1	2	3
Program out	R	A2	2	4	5	6
Program out	MONO	A2	2	7	8	9
Audition out	L	A2	2	10	11	12
Audition out	R	A2	2	13	14	15
Monitor K1	L	A4	2	1	2	-
Monitor K1	R	A4	2	3	4	-
Monitor K2	L	A4	2	5	6	-
Monitor K2	R	A4	2	7	8	-
Cue Output	-	A4	2	9	10	11

Table 2-3 AC-8 Control Function Connections

CONTROL	ASSY NO	CONTROL TB ( )	SWITCH TERMINALS		TERMINAL
Pushbutton					
1A	A6	13	1	2	-
1B	A6	13	3	4	-
2A	A6	13	5	6	-
2B	A6	13	7	8	-
3A	A6	13	9	10	-
3B	A6	13	11	12	-
4A	A6	14	1	2	-
4B	A6	14	3	4	-
5A	A6	14	5	6	-
5B	A6	14	7	8	-
6A	A6	14	9	10	-
6B	A6	14	11	12	-
7A	A6	15	1	2	-
7B	A6	15	3	4	-
8A	A6	15	5	6	-
8B	A6	15	7	8	-
Mute Key Ground					
1 PGM	A6	16	-	-	1
1 AUD	A6	16	-	-	2
2 PGM	A6	16	-	-	3
2 AUD	A6	16	-	-	4
3 PGM	A6	16	-	-	5
3 AUD	A6	16	-	-	6
4 PGM	A6	16	-	-	7
4 AUD	A6	16	-	-	8
5 PGM	A6	16	-	-	9
5 AUD	A6	16	-	-	10
6 PGM	A6	16	-	-	11
6 AUD	A6	16	-	-	12
7 PGM	A6	15	-	-	9
7 AUD	A6	15	-	-	10
8 PGM	A6	15	-	-	11
8 AUD	A6	15	-	-	12
On-Air Warning Light Connections*					
K1	A6	13	13	14	-
K2	A6	14	13	14	-
Cue Muting*					
K1	A6	13	13	15	-
K2	A6	14	13	15	-
Mute Relay To Ground					
K1	A6	16	-	-	13
K2	A6	16	-	-	14

* K1 or K2 can not be used simultaneously for on-air warning and cue mute.

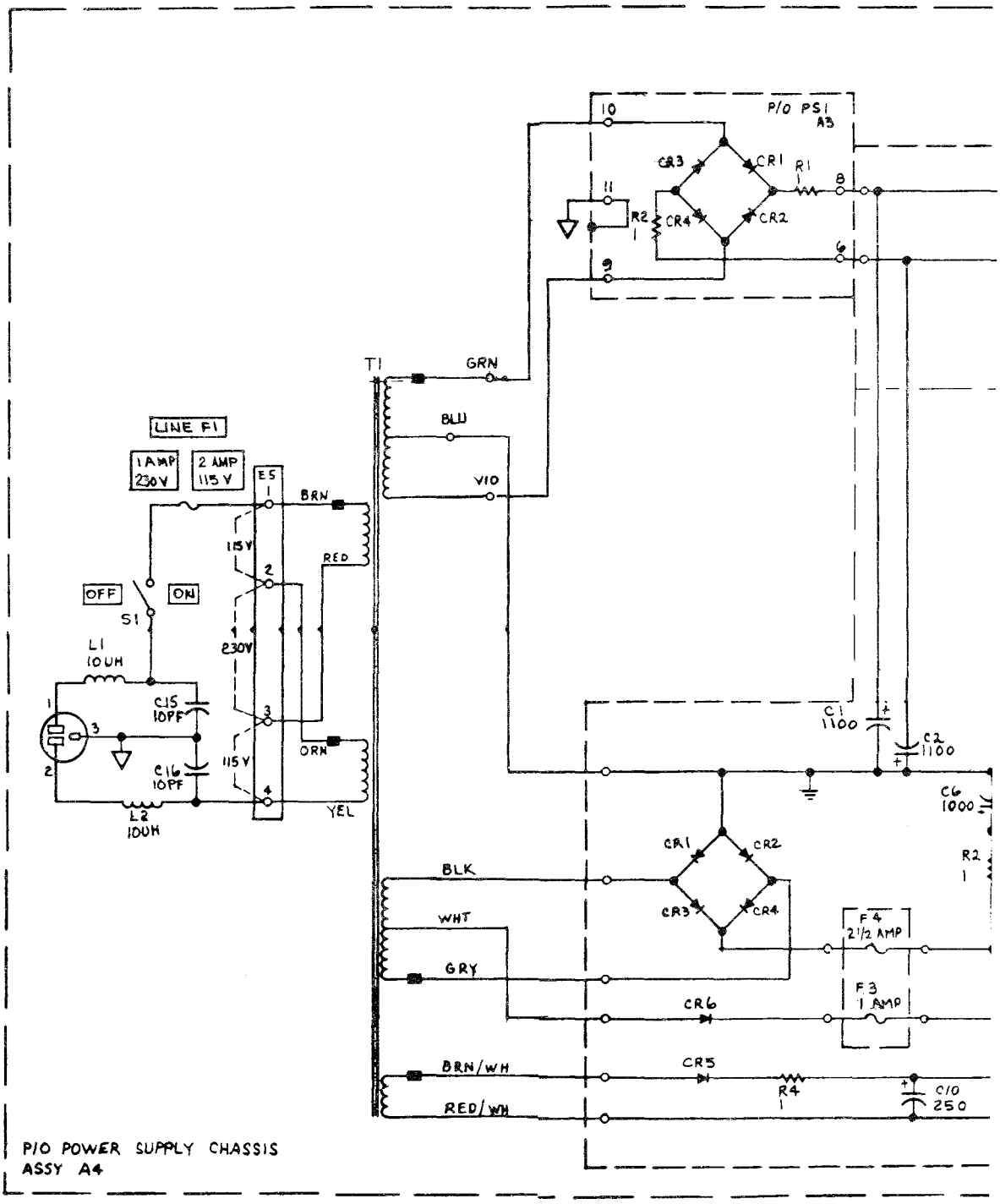

P/O POWER SUPPLY CHASSIS
ASSY A4

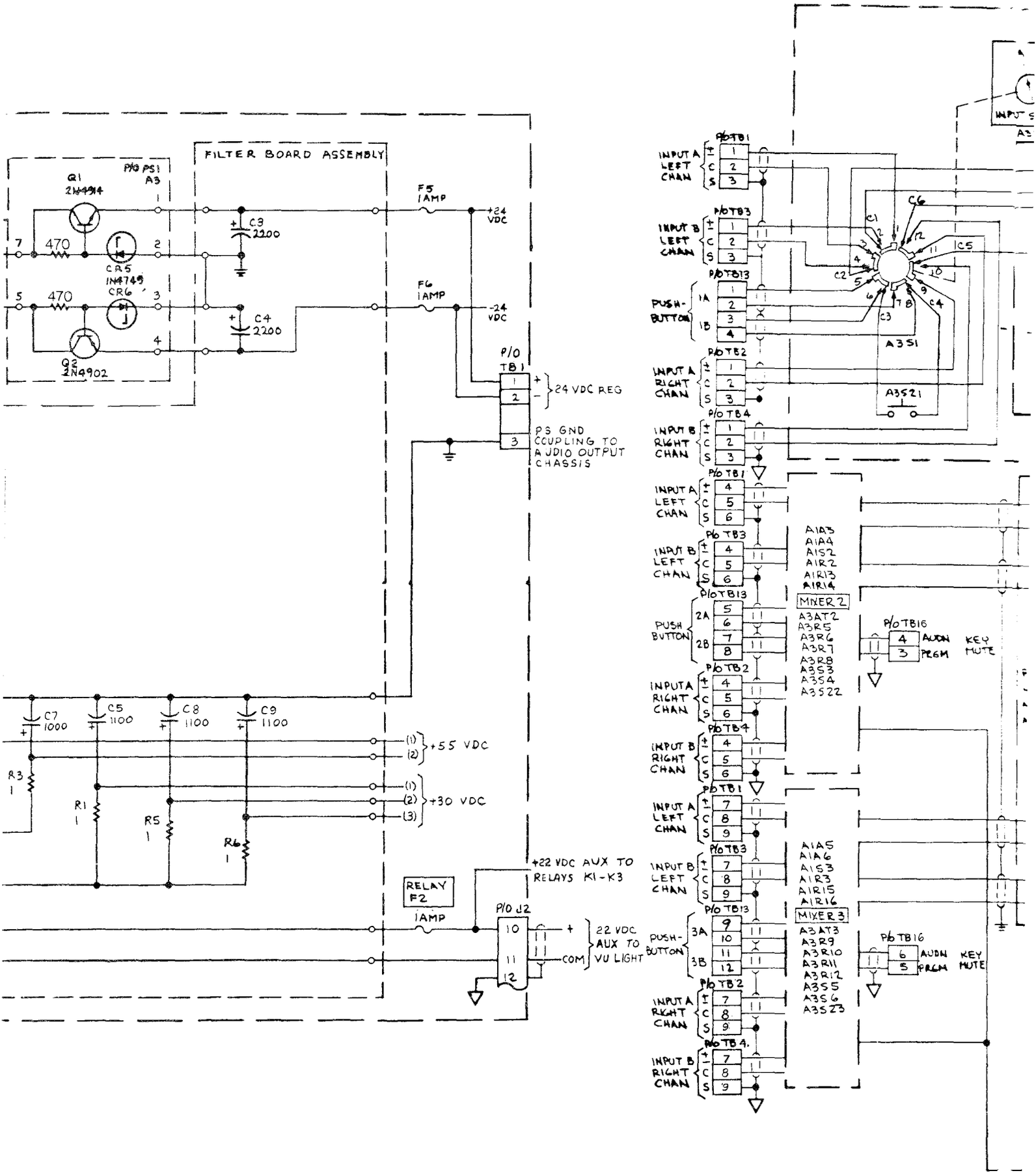
FILTER BOARD ASSEMBLY
P/O PS1 A3
Q1 2N4914
Q2 2N4902
470
470
CR5 1N4749
CR6
C3 2200
C4 2200
F5 1AMP
F6 1AMP
+24 VDC
-24 VDC
P/O TB1
24 VDC REG
PS GND COUPLING TO AUDIO OUTPUT CHASSIS
C7 1000
C5 1100
C8 1100
C9 1100
R3 1
R1 1
R5 1
R6 1
+55 VDC
+30 VDC
RELAY F2
1AMP
+22 VDC AUX TO RELAYS K1-K3
P/O J2
22 VDC AUX TO VU LIGHT
COM
INPUT A LEFT CHAN
INPUT B LEFT CHAN
PUSH-BUTTON
INPUT A RIGHT CHAN
INPUT B RIGHT CHAN
A3S1
A3S21
A1A3 A1A4 A1S2 A1R2 A1R13 A1R14
MIXER 2
A3AT2 A3R5 A3R6 A3R7 A3R8 A3S3 A3S4 A3S22
P/O TB16
AUDN
PRGM
KEY MUTE
A1A5 A1A6 A1S3 A1R3 A1R15 A1R16
MIXER 3
A3AT3 A3R9 A3R10 A3R11 A3R12 A3S5 A3S6 A3S23

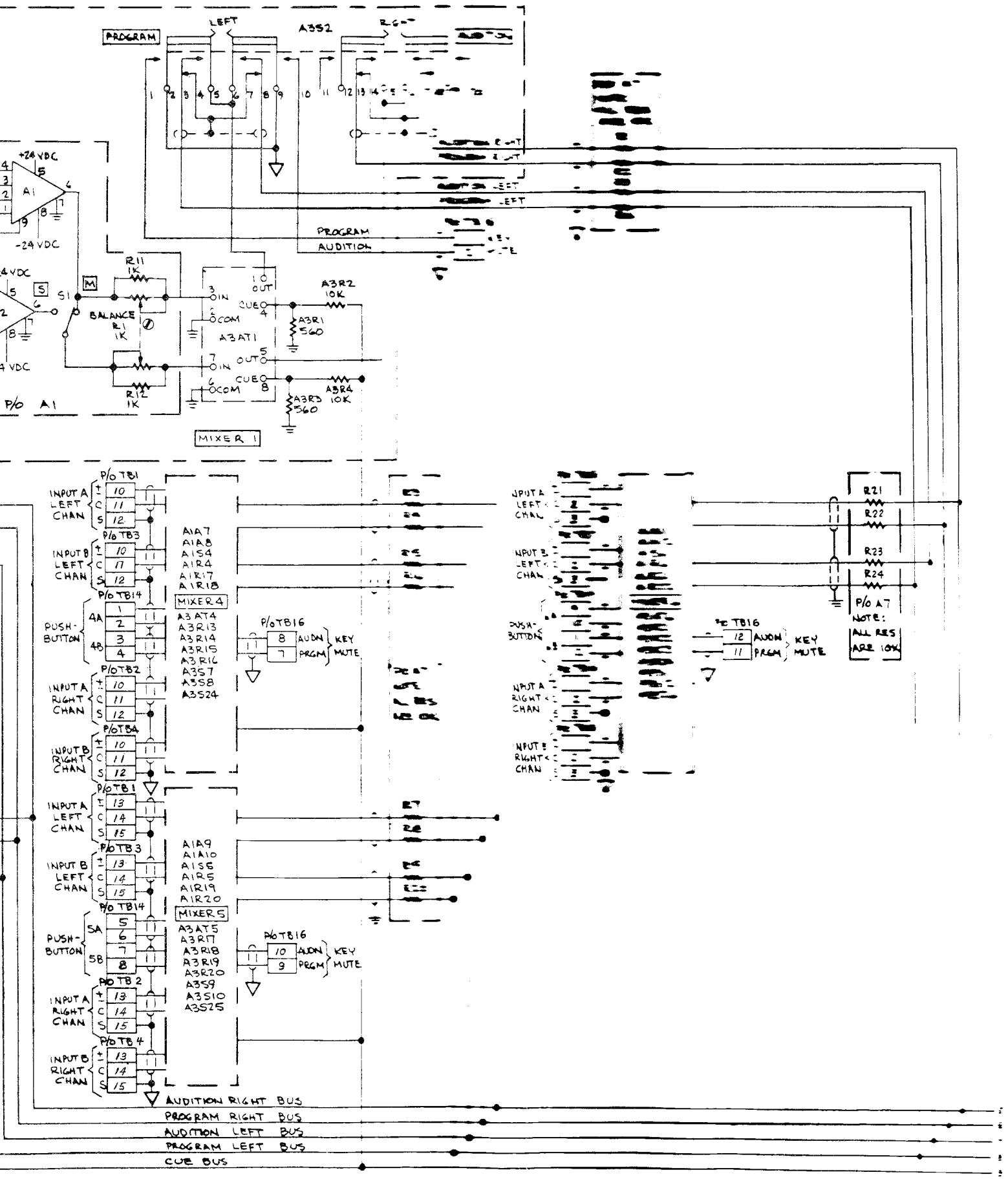

Figure 2 [illegible] Console Chassis Schematic Diagram Sheet [illegible]


1
2
3
4
5
6
7
8
9
LEF
S C T
6
S C T
8
S C T
4
P/O TB7
9 8 7
P/O TB7
6 5 4
P/O TB5
15 14
8

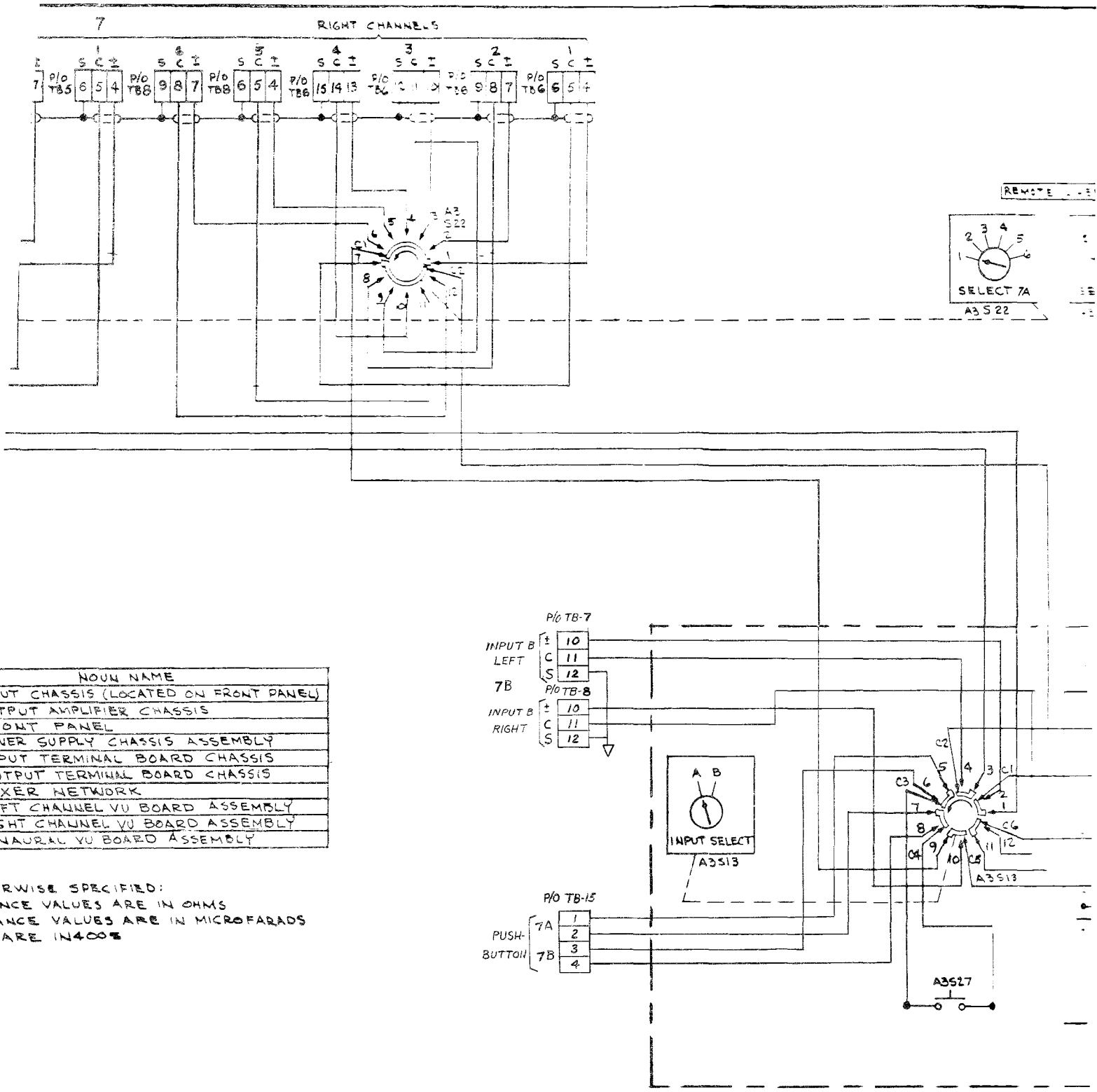

NOUN NAME
INPUT CHASSIS (LOCATED ON FRONT PANEL)
OUTPUT AMPLIFIER CHASSIS
FRONT PANEL
POWER SUPPLY CHASSIS ASSEMBLY
INPUT TERMINAL BOARD CHASSIS
OUTPUT TERMINAL BOARD CHASSIS
MIXER NETWORK
LEFT CHANNEL VU BOARD ASSEMBLY
RIGHT CHANNEL VU BOARD ASSEMBLY
MONAURAL VU BOARD ASSEMBLY

OTHERWISE SPECIFIED:
SISTANCE VALUES ARE IN OHMS
PACITANCE VALUES ARE IN MICROFARADS
SDES ARE IN4003

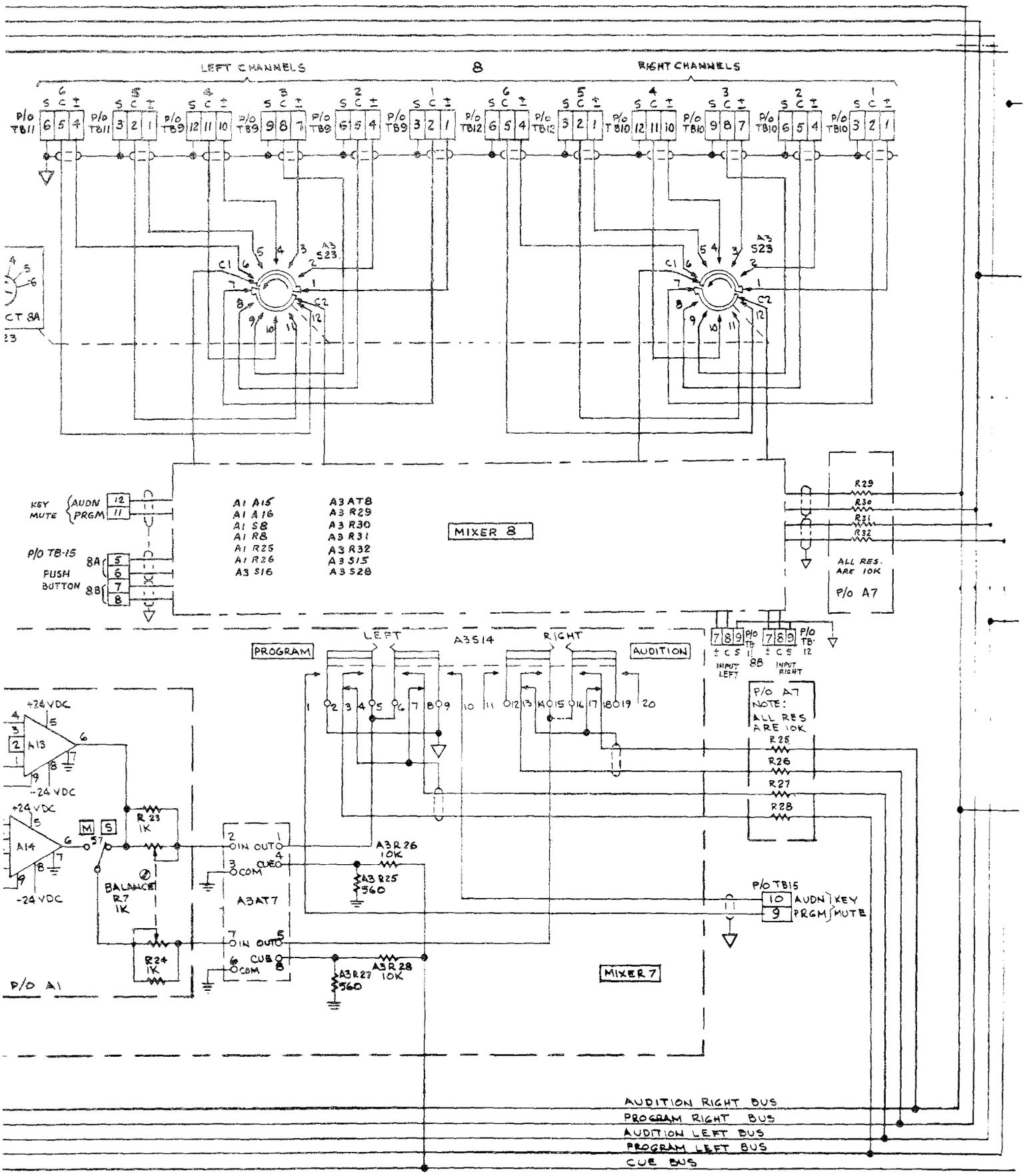

Figure 2 AC-8 Console Chassis, Schematic Diagram (Sheet 2 of

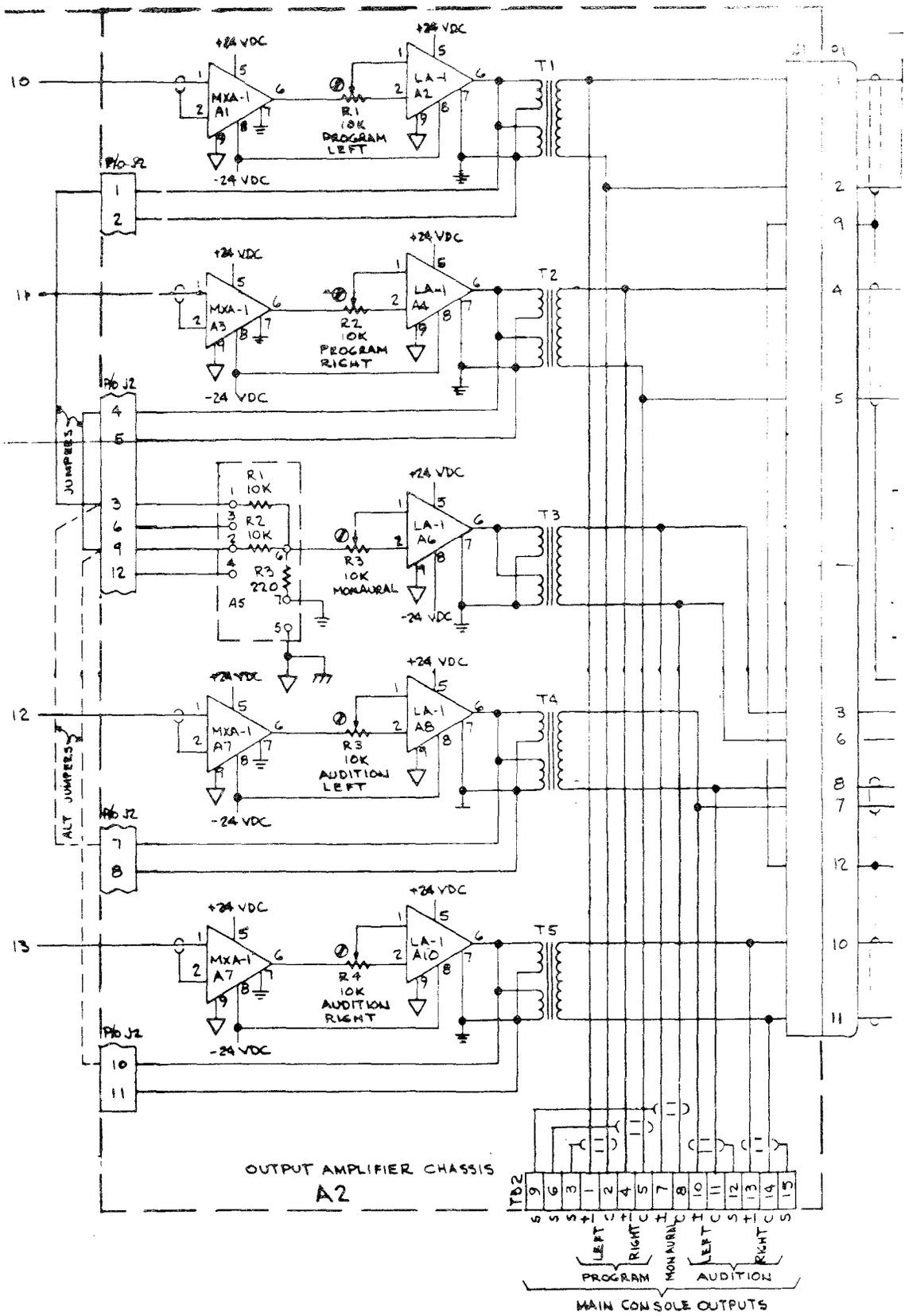
+24 VDC
MXA-1
A1
LA-1
A2
R1
10K
PROGRAM
LEFT
-24 VDC
T1
P/O J2
MXA-1
A3
LA-1
A4
R2
10K
PROGRAM
RIGHT
T2
JUMPERS
R1
10K
R2
10K
R3
220
A5
LA-1
A6
R3
10K
MONAURAL
T3
MXA-1
A7
LA-1
A8
R3
10K
AUDITION
LEFT
T4
ALT JUMPERS
MXA-1
A7
LA-1
A10
R4
10K
AUDITION
RIGHT
T5
OUTPUT AMPLIFIER CHASSIS
A2
TB2
LEFT
RIGHT
MONAURAL
PROGRAM
AUDITION
MAIN CONSOLE OUTPUTS

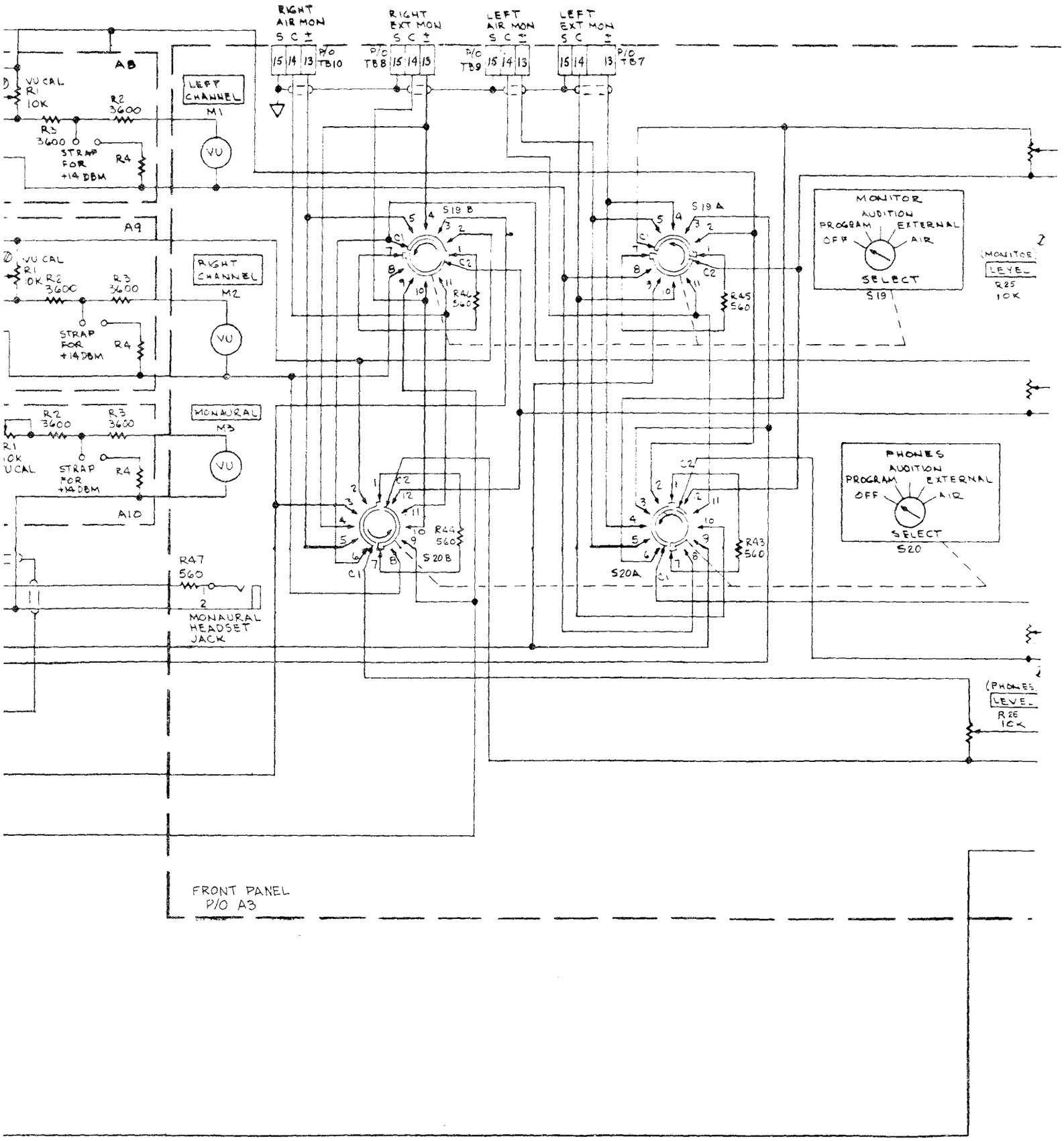
RIGHT AIR MON
S C ±
15 14 13
P/O TB10
RIGHT EXT MON
P/O TB8
LEFT AIR MON
P/O TB9
LEFT EXT MON
P/O TB7
A8
VU CAL R1 10K
R2 3600
R3 3600
STRAP FOR +14 DBM
R4
LEFT CHANNEL
M1
VU
A9
RIGHT CHANNEL
M2
MONAURAL
M3
A10
S19 B
S19 A
R46 560
R45 560
MONITOR
AUDITION
PROGRAM
EXTERNAL
OFF
AIR
SELECT
S19
MONITOR LEVEL
R25 10K
PHONES
S20
S20 B
S20A
R44 560
R43 560
R47 560
MONAURAL HEADSET JACK
PHONES LEVEL
R26 10K
FRONT PANEL
P/O A3

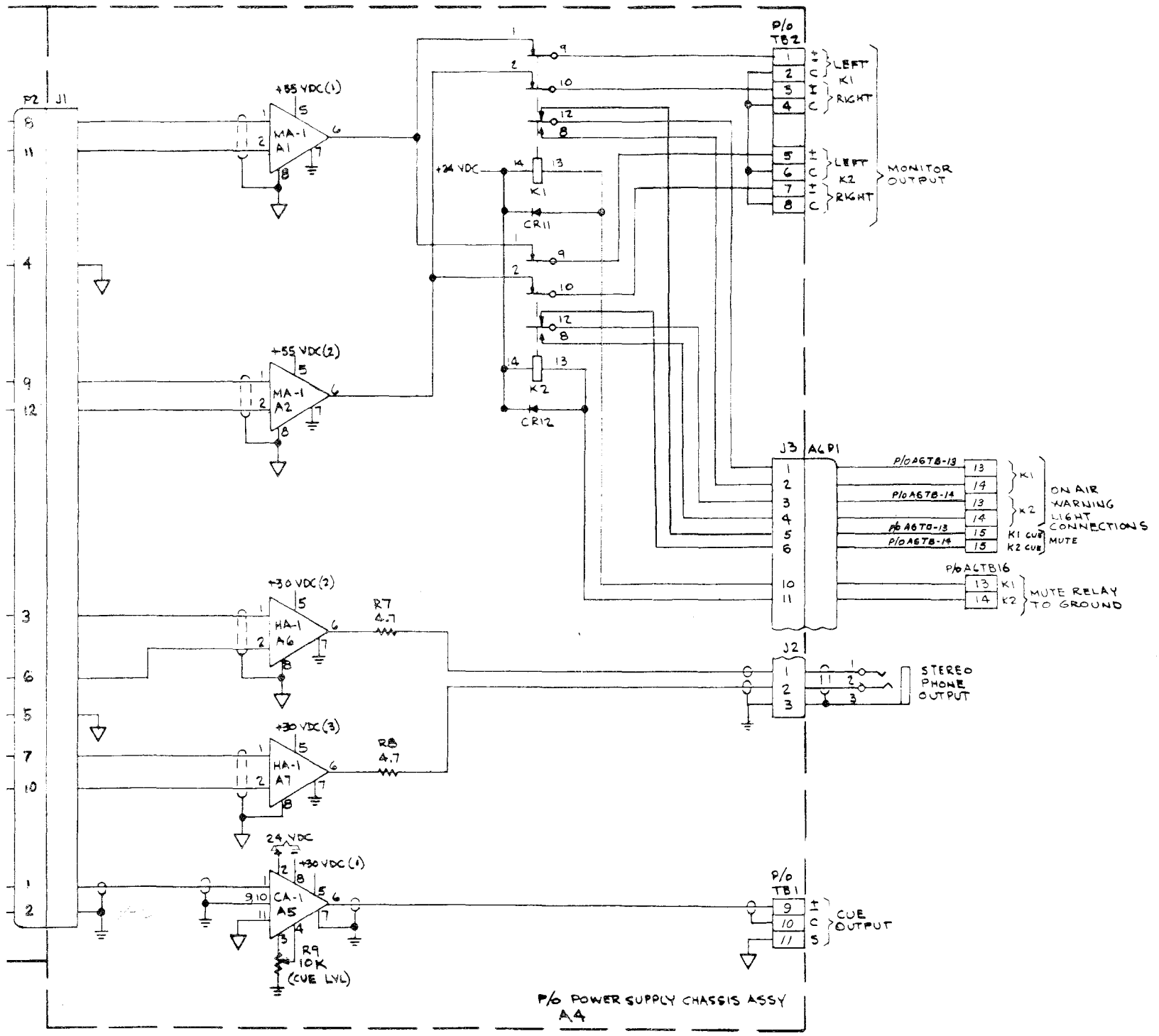

Figure 2 AC-8 Console Chassis, Schematic Diagram (Sheet 3 of 3).

SYMBOL	DESCRIPTION	MANUFACTURER'S PART NUMBER	MFR CODE	PART NUMBER
	AC 8 CONSOLE			
A1	INPUT CHASSIS SEE BREAKDOWN			
A2	OUTPUT AMPLIFIER CHASSIS SEE BREAKDOWN			
A3	FRONT PANEL SEE BREAKDOWN			
A4	POWER SUPPLY CHASSIS ASSEMBLY SEE BREAKDOWN			
A5	INPUT TERMINAL BOARD CHASSIS SEE BREAKDOWN			
A6	OUTPUT TERMINAL BOARD ASSEMBLY SEE BREAKDOWN			
A7	MIXER NETWORK SEE BREAKDOWN			
A8	LEFT CHANNEL VU BOARD ASSEMBLY SEE BREAKDOWN			
A9	RIGHT CHANNEL VU BOARD ASSEMBLY SEE A8 FOR BREAKDOWN			
A10	MONAURAL VU BOARD ASSEMBLY SEE A8 FOR BREAKDOWN			
	INPUT CHASSIS, A1			
A1 THROUGH A16	SELECT A1 THROUGH A16 FROM THE FOLLOWING			
	MATCHING TRANSFORMER	MT-1		124-0052-894
	BRIDGING TRANSFORMER	BT-1		124-0052-893
	JUMPER PLUG	JP-1		124-0052-863
	MICROPHONE PREAMPLIFIER	MPA-1		124-0052-855
R1	POTIEOMETER 1000 OHMS	70C4M032S102U	01121	
R2 THROUGH R8	SAME AS R1			
S1	SWITCH	46206LR	82389	
S2 THROUGH S8	SAME AS S1			
XA1	SOCKET, CONNECTOR	77-MIT9T	03554	
XA2 THROUGH XA16	SAME AS XA1			
	OUTPUT AMPLIFIER CHASSIS, A2			
A1	MIXER AMPLIFIER	MXA-1		124-0052-857
A2	LINE AMPLIFIER	LA-1		124-0052-858
A3	SAME AS A1			

SYMBOL	DESCRIPTION	MANUFACTURER'S PART NUMBER	MFR CODE	PART NUMBER
A4	SAME AS A2			
A5	MIXING PAD	250074-1	AUTOG	
A6	SAME AS A2			
A7	SAME AS A1			
A8	SAME AS A2			
A9	SAME AS A1			
A10	SAME AS A2			
J1	CONNECTOR, ELECTRICAL 12 CONTACTS	S3312AB	10651	
J2	SAME AS J1			
P1	CONNECTOR 12 CONTACTS	P3312CCT	10651	
R1	POTENTIOMETER 10 KILOHMS	70A4M032S103A	01121	
R2 THROUGH R5	SAME AS R1			
T1	TRANSFORMER	027-0165	31740	
T2 THROUGH T5	SAME AS T1			
TB1	NOT USED			
TB2	TERMINAL BLOCK	599-2004-15	75382	
XA1	CONNECTOR SOCKETS	77M1P9	03554	
XA2 THROUGH XA10	SAME AS XA1			
	FRONT PANEL, A3			
AT1	ATTENUATOR	320Q2B3-600-600	28057	
AT2 THROUGH AT8	SAME AS AT1			
DS1	LAMP	1819	LEECR	
DS2 THROUGH DS6	SAME AS DS1			
M1	METER, VU	561-200	LFECO	
M2	SAME AS M1			
M3	SAME AS M1			
P1	NOT USED			
P2	CONNECTOR 12 CONTACTS	P3312CCT	10651	
R1	RESISTOR 560 OHMS, 10% TOL, 1/2 WATT	RCR20GF561KR	81349	
R2	POTENTIOMETER 10 KILOHMS	70C4N100S103A	01121	
R3	SAME AS R1			
R4	SAME AS R2			
R5	SAME AS R1			
R6	SAME AS R2			
R7	SAME AS R1			
R8	SAME AS R2			
R9	SAME AS R1			
R10	SAME AS R2			
R11	SAME AS R1			
R12	SAME AS R2			
R13	SAME AS R1			
R14	SAME AS R2			
R15	SAME AS R1			
R16	SAME AS R2			
R17	SAME AS R1			
R18	SAME AS R2			
R19	SAME AS R1			

SYMBOL	DESCRIPTION	MANUFACTURER'S PART NUMBER	MFR CODE	PART NUMBER
R20	SAME AS R2			
R21	SAME AS R1			
R22	SAME AS R2			
R23	SAME AS R1			
R24	SAME AS R2			
R25	RESISTOR 560 OHMS, 10% TOL, 1/2 WATT	RCR20GF561KR	81349	
R26	POTENTIOMETER 10 KILOHMS	70C4N100S1D3A	01121	
R27	SAME AS R25			
R28	SAME AS R26			
R29	SAME AS R1			
R30	SAME AS R2			
R31	SAME AS R1			
R32	SAME AS R2			
S1	SWITCH	399433K	76854	
S2	SWITCH 24 CONTACTS	1E12763-1937	01548	
S3	SAME AS S1			
S4	SAME AS S2			
S5	SAME AS S1			
S6	SAME AS S2			
S7	SAME AS S1			
S8	SAME AS S2			
S9	SAME AS S1			
S10	SAME AS S2			
S11	SAME AS S1			
S12	SAME AS S2			
S13	SWITCH	399433K	76854	
S14	SWITCH 24 CONTACTS	1E12763-1937	01548	
S15	SAME AS S13			
S16	SAME AS S14			

SYMBOL	DESCRIPTION	MANUFACTURER'S PART NUMBER	MFR CODE	PART NUMBER
S21	SWITCH	4001	25435	
S22 THROUGH S28	SAME AS S21			
S19	SWITCH	399429K	76854	
S20	SAME AS S19			
S22	SWITCH	399431K	76854	
S23	SAME AS S22			
XDS1	LAMPSOCKET	7-20	LEECR	
XDS2 THROUGH XDS6	SAME AS XDS1			
	MISCELLANEOUS PARTS			
	KNOB -QTY 8	RB67-4SKMLD	86797	281-0628-050
	KNOB -QTY 14	R867-1SKMLD	86797	281-0628-020
	POWER SUPPLY CHASSIS ASSEMBLY, A4			
A1	MONITOR AMPLIFIER	MA-1		124-0052-859
A2	SAME AS A1			
A3	POWER SUPPLY	PS-1		124-0052-862
A4	SAME AS A3			
A5	CUE AMPLIFIER	CA-1		124-0052-861
A6	HEADPHONE AMPLIFIER	HA-1		124-0052-860
A7	SAME AS A6			
C1	CAPACITOR 1100 UF, 50 VDCW	39D118G050HP4	56289	
C2	SAME AS C1			
C6	CAPACITOR 1000 UF, 75 VDCW	39D108G075JP4	56289	
C7	SAME AS C6			
C10	CAPACITOR 250 UF, 50 VDCW	TVA1312	56289	
C3	CAPACITOR 2200 UF, 25 VDCW	39D228G025HP4	56289	
C4	SAME AS C3			
C5	SAME AS C1			
C8	SAME AS C1			
C9	SAME AS C1			
C15	CAPACITOR 10 PF, 500 VDCW	DD100	99942	
C16	SAME AS C15			
CR1	DIODE	1N4005G	07688	
CR2 THROUGH CR6	SAME AS CR1			
F1	FUSE, CARTRIDGE 2 AMPS, CURRENT RATING	MDL2	71400	
F2	FUSE, CARTRIDGE 1 AMP CURRENT RATING	AGC1	71400	
F3	SAME AS F2			
F4	FUSE, CARTRIDGE 2.5 AMPS CURRENT RATING	MDL2-1-5	71400	

SYMBOL	DESCRIPTION	MANUFACTURER'S PART NUMBER	MFR CODE	PART NUMBER
F5	SAME AS F2			
F6	SAME AS F2			
J1	CONNECTOR 12 CONTACTS	S3312AB	10651	
J2	SAME AS J1			
J3	SAME AS J1			
K1	RELAY	GP1R11D200	07389	
K2	SAME AS K1			
L1	INDUCTOR 10 UH	8503	16428	
L2	SAME AS L1			
R1	RESISTOR 1 OHM, 5 WATTS	4530	44655	
R2 THROUGH R6	SAME AS R1			
R7	RESISTOR, FXD, COMPOSITION 4.7 OHMS, 10% TOL, 1 WATT	RCR32G4R7KS	81349	
R8	SAME AS R7			
R9	POTENTIOMETER 10 KILOHMS	70A4M032S103A	01121	
S1	SWITCH	8280K16	27191	
T1	TRANSFORMER	020-0417	31740	
TB1	TERMINAL BOARD	599-2004-4	75382	
TB2	TERMINAL BOARD	599-2004-15	75382	
TB3	SAME AS TB2			
XF1	FUSEHOLDER	342004-1	75915	
XF2 THROUGH XF6	SAME AS XF1			
	INPUT TERMINAL BOARD CHASSIS, A5			
TB1	TERMINAL BOARD	599-2004-15	75382	
TB2 THROUGH TB12	SAME AS TB1			
	OUTPUT TERMINAL BOARD CHASSIS, A6			
TB1 THROUGH TB12	NOT USED			
TB13	TERMINAL BOARD	599-2004-15	75382	
TB14 THROUGH TB16	SAME AS TB13			

SYMBOL	DESCRIPTION	MANUFACTURER'S PART NUMBER	MFR CODE	PART NUMBER
	MIXER NETWORK, A7			
R1	RESISTOR, FXD, COMPOSITION 10 KILOHMS, 5% TOL, 1/4 WATT	RCR07G103JR	81349	
R2 THROUGH R24	SAME AS R1			
	LEFT - RT CHANNEL VU BOARD ASSEMBLY, A8···9			
R1	POTENTIOMETER 10 KILOHMS	3007P1-103	80294	
R2	RESISTOR, FXD, COMPOSITION 3600 OHMS, 5% TOL, 1/2 WATT	RCR20GF362JR	81349	
R3	SAME AS R2			
	MANUFACTURES CODES			
CODE	NAME AND ADDRESS			
AUTOG	AUTOGRAM 631 J PLACE P O BOX 454 PLANO, TX 75074			
LEECR	LEECRAFT MFG CO INC 21-16 44TH ROAD LI NEW YORK, NY 11101			
LFECO	LFE CORP, PROCESS CONTROL DIV 1601 TRIAPELO ROAD WALTHAN, MA 02154			
01121	ALLEN BRADLEY CO 1201 2ND ST MILWAUKEE, WI 53212			
01548	CAPITOL MACHINE AND SWITCH CO 87 NEWTOWN ROAD DANBURY, CT 06810			
03554	AMPHENOL CANADA LTD, DIV OF THE BUNKER RAMCO CORP 44 METROPOLITAN RD SCARBOROUGH ONTARIO, CANADA			
07389	CLAIR CORP 10085 WINDSTREAM DR COLUMBIA, MD 21043			
07688	MILITARY STANDARDS			
10651	VERNITRON CORP 175 COMMUNITY DR GREAT NECK, NY 11021			
16428	BELDEN CORP P O BOX 341 RICHMOND, IN 47374			

SYMBOL	DESCRIPTION	MANUFACTURER'S PART NUMBER	MFR CODE	PART NUMBER
25435	GRAYHILL MOLDTRONICS INC 703 ROGERS ST DOWNERS GROVE, IL 60515			
27191	CUTLER-HAMMER INC 4201 N 27TH ST MILWAUKEE, WI 53216			
28057	SHALL-CO INC HIGHWAY 301 SOUTH P O BOX 55 SMITHFIELD, NC 27577			
31740	LEIGHTNER ELECTRONICS INC P O BOX 314 PLANO, TX 75074			
44655	OHMITE MFG CO 3601 W HOWARD ST SKOKIE, IL 60076			
56289	SPRAGUE ELECTRIC CO NORTH ADAMS, MA 01247			
71400	BUSSMANN MFG, DIV OF MCFRAW-EDISON CO 2536 W UNIVERSITY ST ST LOUIS, MO 63017			
75382	KULKA ELECTRIC CORP 633-643 S FULTON AVE MT VERNON, NY 10550			
75915	LITTLEFUSE INC 800 E NORTHWEST HWY DES PLAINES, IL 60016			
76854	OAK MFG CO S MAIN ST CRYSTAL LAKE, IL 60014			
80294	BOURNS INC 1200 COLUMBIA AVE RIVERSIDE, CA 92507			
81349	MILITARY STANDARDS			
82389	SWITCHCRAFT INC 5555 N ELSTON AVE CHICAGO, IL 60630			
86797	ROGAN BROS INC 8031 N MONTICELLO SKOKIE, IL 60076			
99942	CENTRALAB SEMICONDUCTOR 4501 N ARDEN DR EL MONTE, CA 91734			

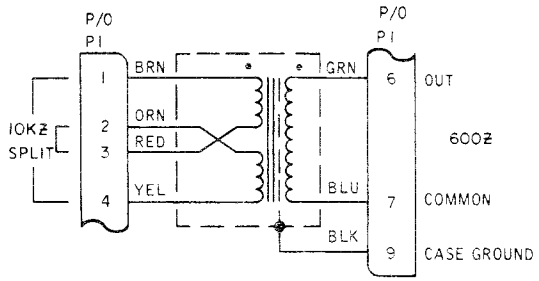

Figure 3. Bridging Transformer BT-1, Schematic Diagram.

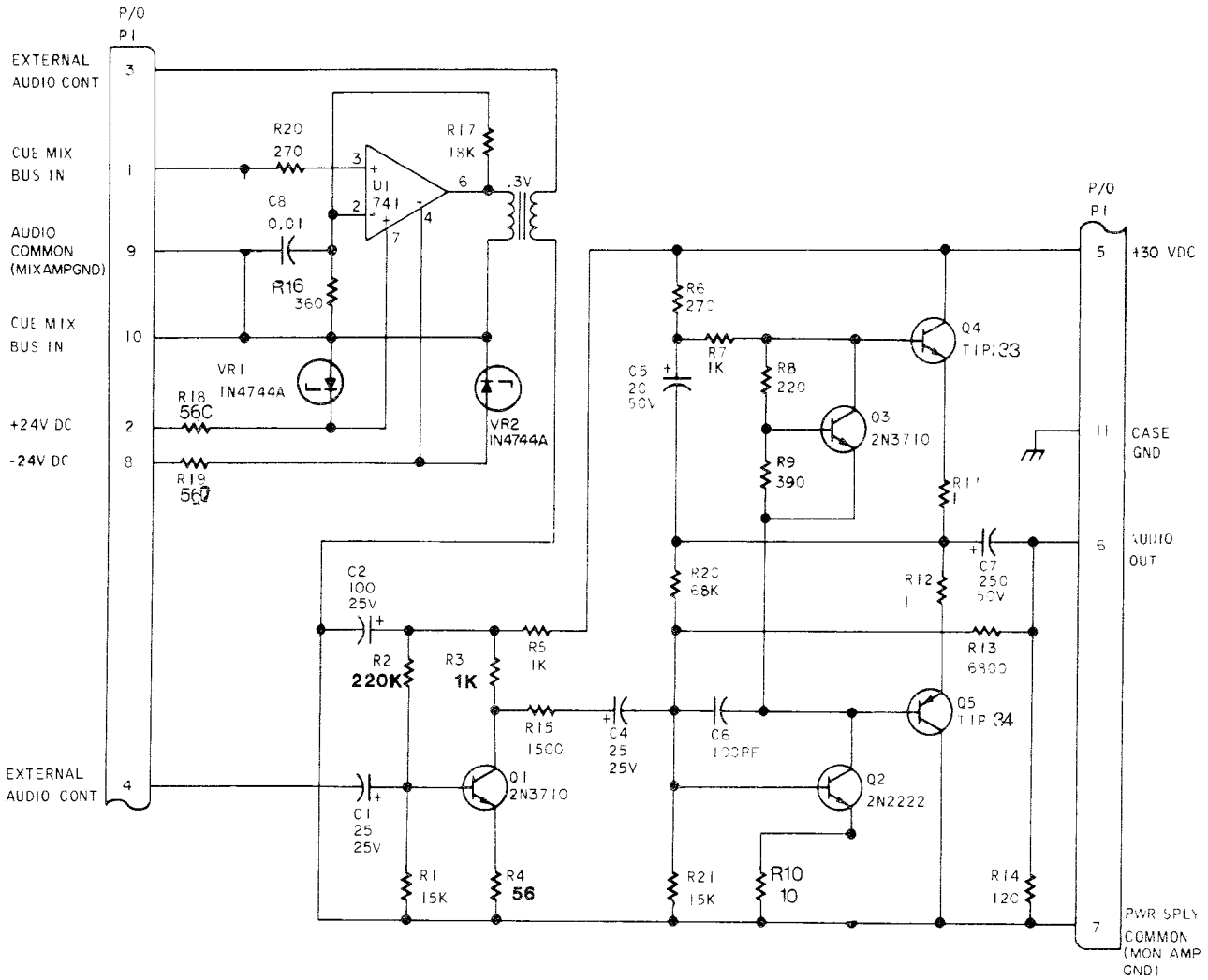

NOTES:
1. UNLESS OTHERWISE SPECIFIED
ALL RESISTANCE VALUES ARE IN OHMS.
ALL CAPACITANCE VALUES ARE IN MICROFARADS.

Figure 4. Cue Amplifier CA-1, Schematic Diagram.

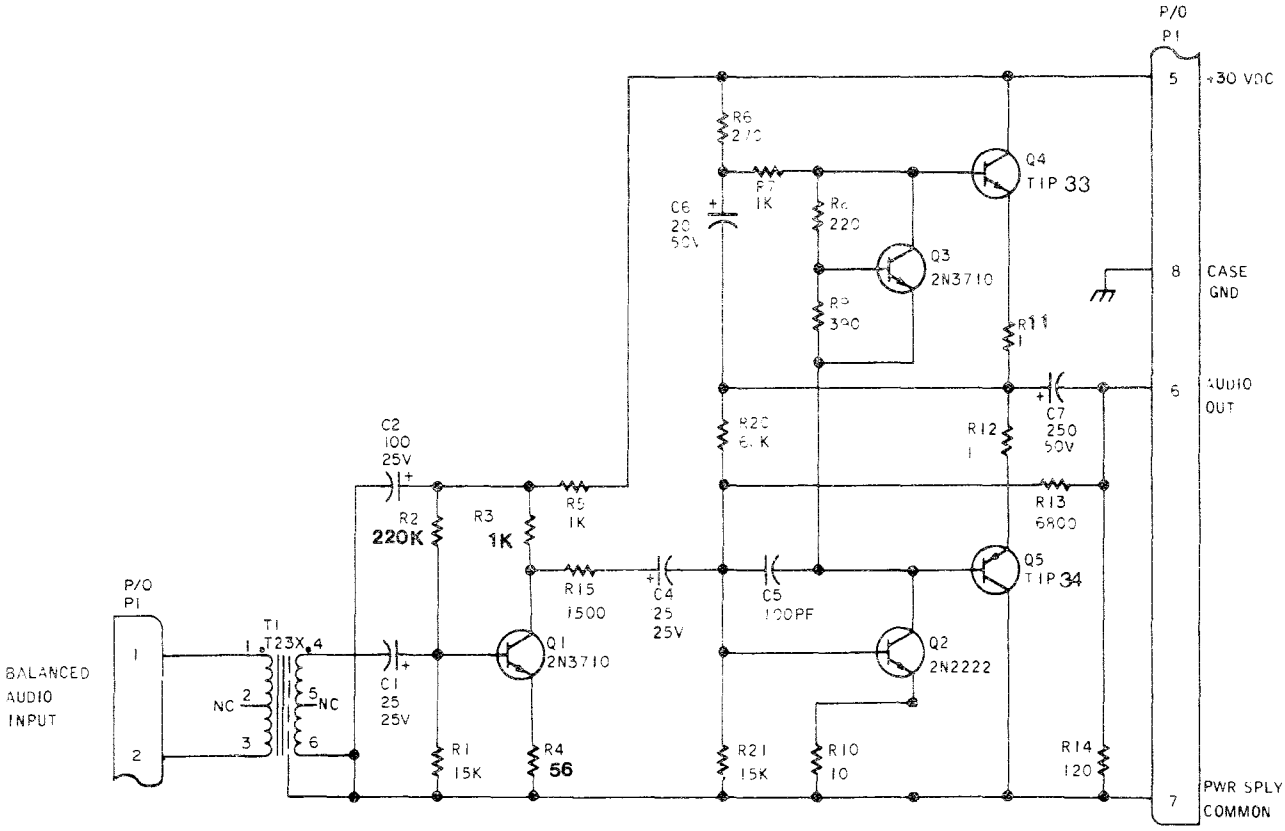

NOTES:

1. UNLESS OTHERWISE SPECIFIED
   ALL RESISTANCE VALUES ARE IN OHMS.
   ALL CAPACITANCE VALUES ARE IN MICROFARADS.

Figure 5. Headphone Amplifier HA-1, Schematic Diagram.

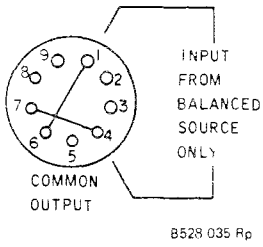

Figure 6. Jumper Plug JP-1, Schematic Diagram.

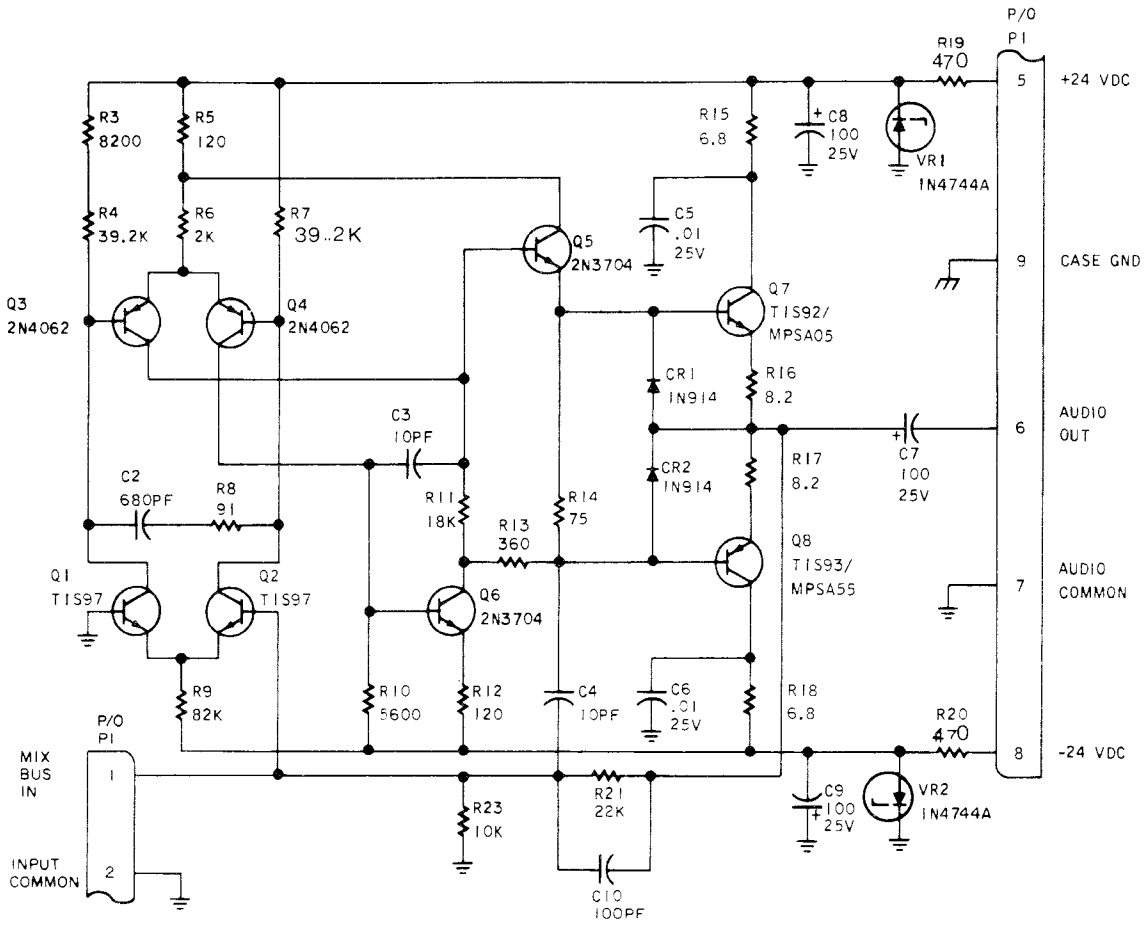

NOTES:

1. UNLESS OTHERWISE SPECIFIED
   ALL RESISTANCE VALUES ARE IN OHMS
   ALL CAPACITANCE VALUES ARE IN MICROFARADS

Figure 7 Mixer Amplifier MXA-1, Schematic Diagram.

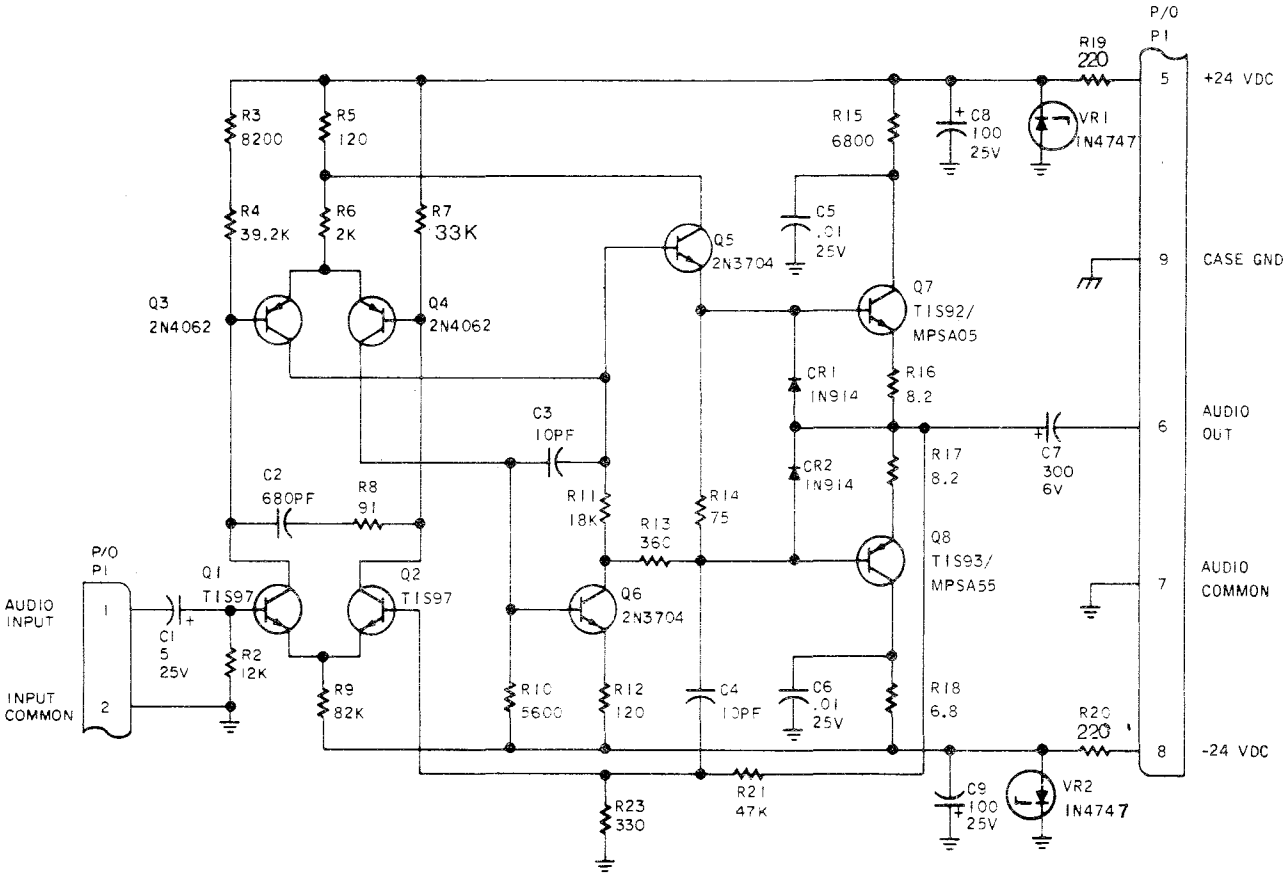

NOTES:

1. UNLESS OTHERWISE SPECIFIED
   ALL RESISTANCE VALUES ARE IN OHMS
   ALL CAPACITANCE VALUES ARE IN MICROFARADS

Figure 12 Line Amplifier LA-1, Schematic Diagram.

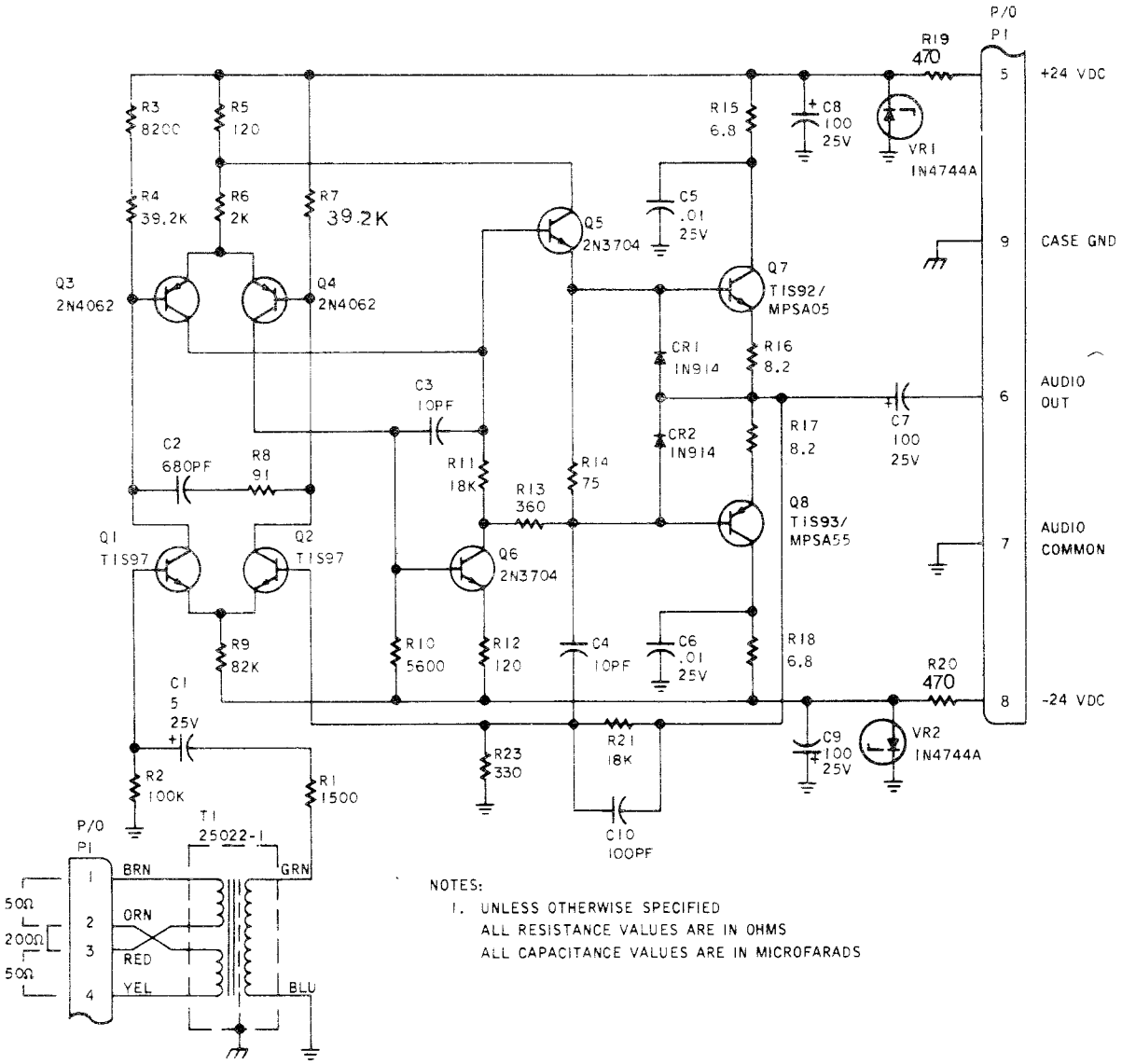

Figure 8 Microphone Preamplifier MPA-1, Schematic Diagram.

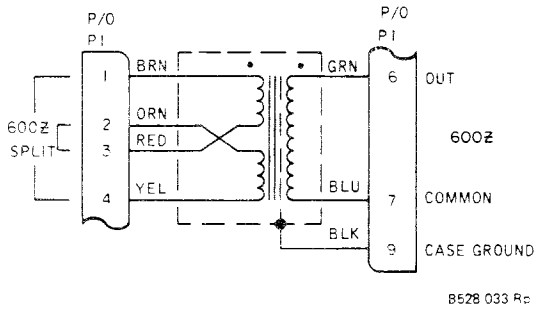

Figure 9 Matching Transformer MT-1, Schematic Diagram.

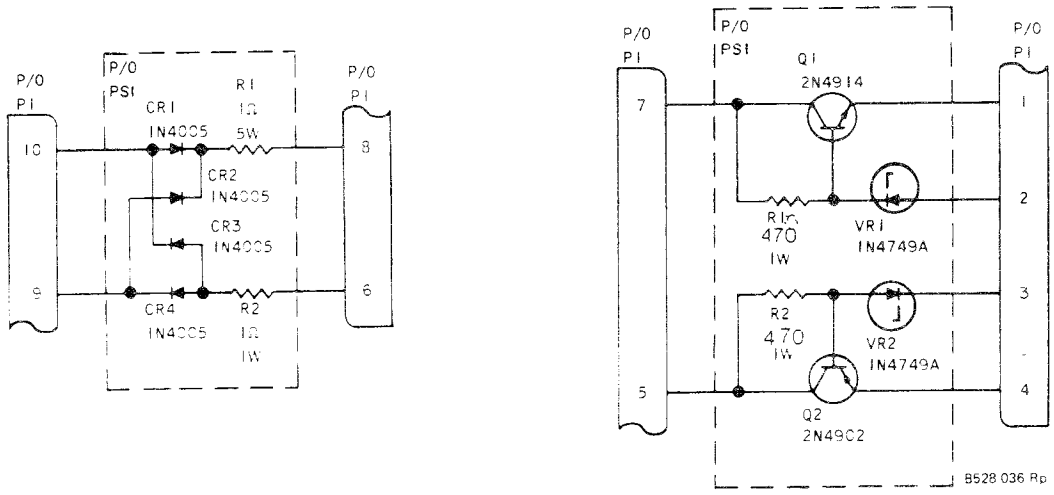

Figure 10 Power Supply PS1, Schematic Diagram.

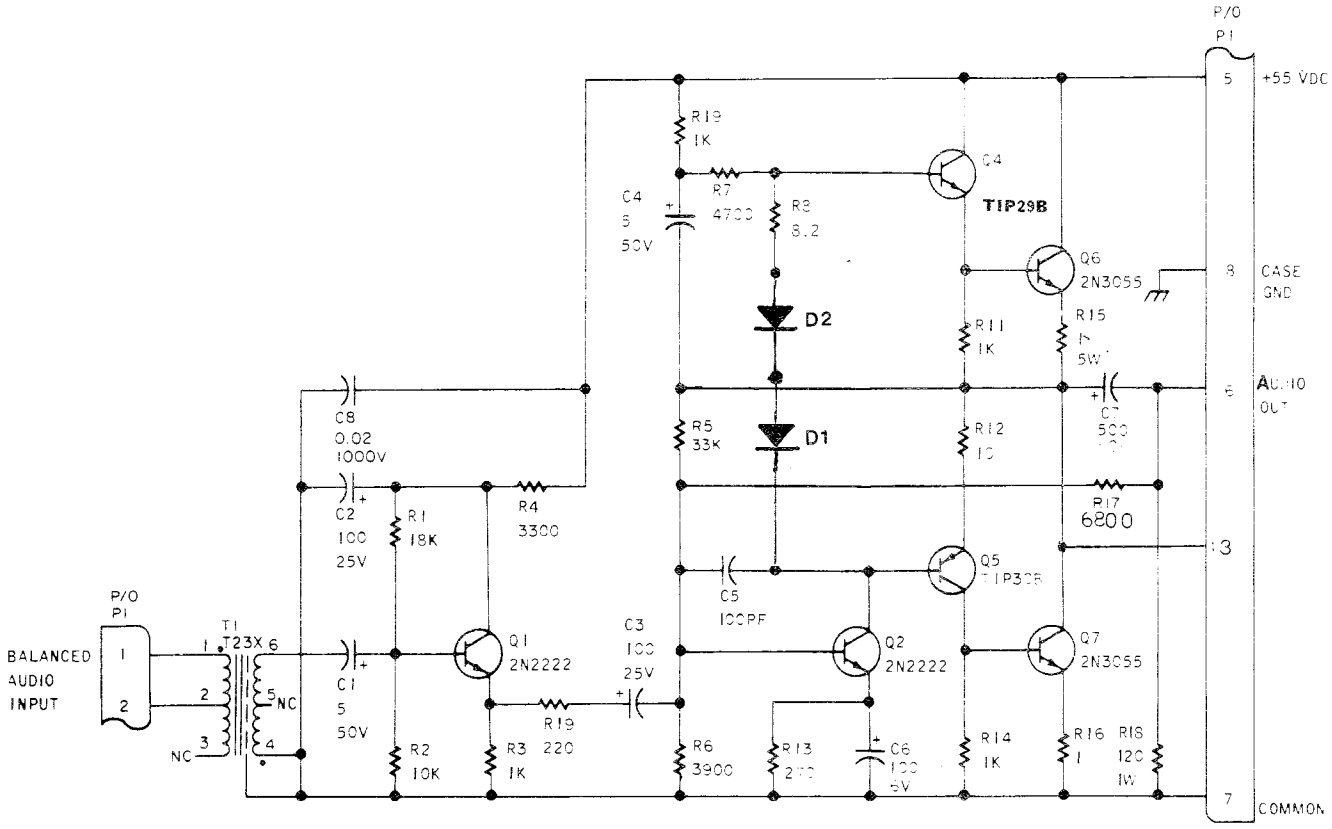

NOTES:

1. UNLESS OTHERWISE SPECIFIED
   ALL RESISTANCE VALUES ARE IN OHMS.
   ALL CAPACITANCE VALUES ARE IN MICROFARADS.

Figure 11 Monitor Amplifier MA-1, Schematic Diagram.

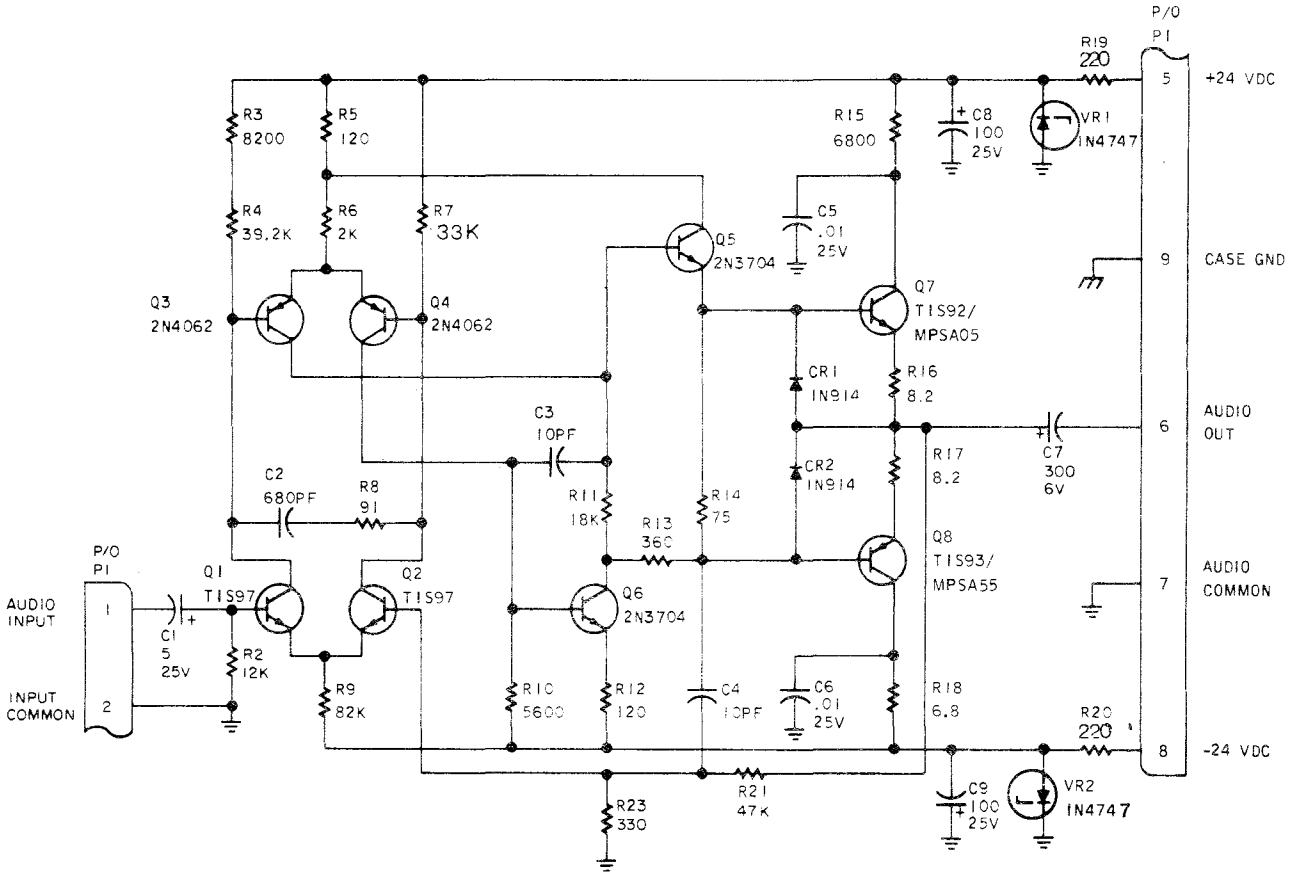

NOTES:

1. UNLESS OTHERWISE SPECIFIED
   ALL RESISTANCE VALUES ARE IN OHMS
   ALL CAPACITANCE VALUES ARE IN MICROFARADS

Figure 12 Line Amplifier LA-1, Schematic Diagram.