IGM INSTACART

OPERATION AND MAINTENANCE MANUAL

6362-0001-00

IGM CUSTOMER SERVICE
A Division of NTI 4041 Home Road
Bellingham, WA 98225

TELEPHONE: MON. – THUR. 7:30 – 5:00
FRI. . . . . 7:30 – 11:30
206-733-4567

EMERGENCY SERVICE
AFTER HOURS: 206-676-1111 and ASK FOR PAGER No. 268. Give your name, station, phone and equipment.

IGM
a Division of Northwest Technology
4041 Home Road
Bellingham, Washington 98225
206-733-4567

IGM INSTACART

OPERATION AND MAINTENANCE MANUAL

6362-0001-00

The material in this manual is for informational purposes and is subject to change without notice.

12/19/75

APPROVAL	DATE
DRAFT	
CHECK	
ENG.	
SERIAL #	

SHEET 1 OF 65 SCALE=

THE INFORMATION CONTAINED HEREIN IS PROPRIETARY AND IS NOT TO BE REPRODUCED OR RELEASED WITHOUT WRITTEN PERMISSION OF NTI/IGM.

IGM
A Division of NTI · 4041 Home Road
Bellingham, Wa. 98225

TITLE:
INSTACART OPERATION & MAINTENANCE MANUAL W/SCHEMATICS

SIZE	DWG. NO.	REV.
A	6362-0001	00

IGM
A Division of NTI . 4041 Home Road . Bellingham, Wa., 98225
(206) 733-4567

To Our Good Customers:

We at IGM welcome you to the large family of world-wide users of IGM products. Our efforts at IGM/NTI are dedicated to you and your needs in the area of work automation and simplification. To this end we strive to approach the level of performance which maximizes reliability, and minimizes down time and service requirements.

We provide you herewith our best efforts to define our product, its make up of component parts, and the recommendations for its service and care.

As a member of our family, we invite your commentary or criticism of our product and our manual. We know, that in spite of editing, reading and re-reading; errors, omissions and undecipherable explanations creep in. Such ambiguity adds to confusion, rather than clarification. Only through a wide variety of experience and field use comes real clarification and refinement. If in your experience you encounter matters of this nature, you will be doing us a real service by calling the error, omission, or contradiction to our attention for correction in our next printing run.

We shall be grateful to you for your contribution to our ever increasing improvement of service to all our good family of customers.

E.C. Burkhart

E.C. Burkhart
President

ECB/cgs

TABLE OF CONTENTS

Title:	Sub-Title:	Section: Page:
DESCRIPTION AND FUNCTIONAL OPERATION		I-1
	General	I-1
	Physical and Electrical Description	I-1
	Instacart Specifications	I-2
	Functional Description	I-2
	Power Supply	I-3
	Start/Stop Logic	I-4
	Decode Tone Processing	I-4
	Audio Processing	I-4
INSTALLATION		II-1
	General	II-1
	Mechanical Installation	II-1
	Electrical Installation	II-2
OPERATION		III-1
	General	III-1
	Preliminary Operating PRocedures	III-2
	Operating Procedures	III-3
MAINTENANCE		IV-1
	General	IV-1
	Preventive Maintenance	IV-1
	Inspection	IV-1
	Cleaning and Lubrication	IV-2
	Adjustment	IV-2
	Functional Test	IV-4
	Troubleshooting	IV-5
	Disassembly	IV-23
REPAIR PARTS LIST		V-1
	General	V-1
	Interpretation of Repair Parts List	V-1
	Ordering Repair Parts	V-1
	Instacart Spare Parts List--Light Support	V-16
	Instacart Spare Parts List--Heavy Support	V-17, V-18
WARRANTY		

LIST OF ILLUSTRATIONS

SECTION VI

Drawing Number	Title
62-0076	Instacart Head Mount
85-0491	Block Diagram
Figure 2	Instacart Panel
Figure 3	Electronic Chassis
Figure 4	Main Board - Mono.
Figure 5	Main Board - Stereo.
Figure 6	Chassis Detail
85-0370	Regulator Card
85-0495	Main Board (Schematic)
85-0497	Motor Wiring Diagram
7699-1071	Front Panel Wiring
85-0518	I.C. Configuration
85-0538	Stero Model (Schematic)
95-0287	Chassis Wiring
95-0288	Audio and Sensor (Schematic)
Figure 14	Audio and Sensor Board
Figure 15	Regulator Card
Figure 16	Instacart - Rear view
Figure 17	Main Board - Mono. Detail
Figure 18	Main Board - Stereo. Detail
85-1091	Dual Auxiliary Sensor PCB

LIST OF TABLES

Table Number:	Title:	Section:	Page:
1	Instacart Specifications	I	2
2	Switches & Operating Functions	III	1 and 2
3	Troubleshooting	IV	5 through 11
4	Instacart Wire List	IV IV	12 through 22 24 through 26
5	Repair Parts	V	3 through 16

SECTION 1

DESCRIPTION AND FUNCTIONAL OPERATION

1-1. GENERAL

1-2. The IGM Instacart is a programmable, automatic tape playing device capable of rapid, random selection of audio programming for broadcasting and industrial uses. The Instacart uses 48 conventional tape cartridges manufactured to National Association of Broadcasters (NAB) standards. Each tape cartridge is mounted on a tray that establishes the location of the tape with respect to the playback heads. The use of a separate tray for each tape cartridge ensures the alignment of each cartridge with the playback heads and capstan drive when the tray is in the play position. Each tray is fitted with its own pinch roller, and is adjustable to accommodate all standard NAB tape cartridges. The trays are installed in the Instacart in four-stacked arrays with each array having its own capstan drive, and each tray position having its own playback head and pre-amp. Manual pushbutton controls and indicator lights are provided on the panel to permit operation and monitoring at the unit. Provisions have also been made for remote operation should the unit be installed as part of an integrated communications system.

1-3. PHYSICAL AND ELECTRICAL DESCRIPTION

1-4. The main frame of the Instacart is fabricated of heavy gauge aluminum, and provides a housing for the vertical tape cartridge arrays. The inside walls and partitions of the main frame are machine grooved to provide a mounting location for each individual tray, precluding the possibility of tray misalignment. Associated with each tray location in the main frame is a solenoid-operated linkage assembly that pulls the tray into the play position. The front of the main frame is fitted with two mounting rails for rack installation. Four capstan drive motors are mounted on the bottom of the main frame, and provide precision drive speed for the tape cartridges through four, 14-inch capstan drive shafts.

1-5. Six printed circuit boards (PCBs) are mounted on the electronic chassis of the unit. Electronic components associated with audio amplification and recovery of programming data are mounted on five of the PCBs. The remaining PCB contains components used for power supply voltage regulation. A single, 20-pin connector provides continuity between the main frame and the electronic chassis, while two connectors are used to provide continuity between the front panel and the electronic chassis. A single, 7-pin

connector is used to provide continuity between the pickup head, tray solenoid, and the elctronic circuitry associated with a specific audio channel (48 connectors are used, one for each audio channel).

1-6. INSTACART SPECIFICATIONS

1-7. The primary features and specifications of the unit are listed in Table 1.

Power requirements	275 watts 115v, 60 Hz
Output level	+15 dbm
Output impedance, balanced	500 ohms
Distortion, @ +18 dbm, less than	2%
Signal to noise ratio @ 7½ IPS, mono	-50 dbm
@ 7½ IPS, stereo	-55 dbm
Measured NAB 3% distortion level	
Freq. response @ 7½ IPS: As measured with an NAB Test Tape: Within a 2 dB window from 300 Hz to 10 kHz, a 3 dB window from 150 to 299 Hz, a 5 dB window from 50 to 149 Hz, and opening up from 2 to 3 dB between 10 and 16 kHz, as shown in Fig. 1B. The upper limit of the window to be flat from 20 Hz to 20 kHz.	
Standard speed (3-3/4 IPS on special order)	7½ IPS
Wow and flutter @ 7½ IPS, less than	.2% rms
Timing accuracy, using direct drive hysteresis synchronous motors	99.9%
Dimensions: width 19 in., depth 19 in., height 19¼ in.	
Weight (shipping): 150 lbs.	

Table 1. Instacart Specifications

1-8. FUNCTIONAL DESCRIPTION

1-9. GENERAL. The Instacart functional circuits are illustrated in figure 1 . All circuitry throughout the Instacart is of conventional design and should present no unique maintenance problems;

therefore, for the purpose of this document, the description of the Instacart's functional operation will be limited to that dealing with circuits rather than individual components. The latest techniques in the state of the art have been employed in the design of the circuits. This assures the customer of efficient, reliable operation, and provides the highest degree of fidelity possible.

1-10. POWER SUPPLY. When the unit POWER switch is pressed, 110 vac is applied to the capstan drive motors and the unit power supply circuitry. The four-capstan drive motors will operate as long as power is applied to the unit. The power supply circuitry is illustrated in figure 7 and consists of components mounted on the electronic chassis and the regulator PCB. The following power supply components are mounted on the electronic chassis: power transformers T1 and power transistor Q6. The remaining components of the power supply circuitry are mounted on the regulator PCB. The power supply provides five-dc output voltages: 24 vdc delayed, 10 vdc, 5 vdc Vcc A, 5 vdc Vcc B, and -10 vdc. The rectifying and filtering circuits are conventional, and consist of three, full-wave rectifiers (BR1, BR2 and BR3) and input and output filter capacitors.

All of the dc outputs are regulated using current amplifying transistors Q3, Q7,Q11 and Q15 to control series pass transistors Q2,Q6,Q10 and Q14, respectively. Transistors Q1 and Q13 comprise error amplifiers. Transistors Q4,Q8,Q12 and Q16 comprise current sources. With the exception of the +10 and -10 vdc error amplifiers, which differ slightly in configuration, the overall operation of the amplifiers is identical. The +10 and -10 vdc outputs are adjustable, and use potentiometers R14 and R18 to vary the base level of transistors Q12 and Q16, respectively, whereas the base level of the error amplifiers associated with the +5 and +24 outputs is fixed. Operation of the error amplifier associated with +10 vdc output is presented here, and is representative of the four amplifiers. The base level of regualting transistor Q11 is controlled by varying the current flowing through the error amplifier, which consists of transistor Q12. Resistors R10 and R11, transistor Q9, diodes D7 and D8, and capacitor C11 form a current source for driving the base of transistor Q11. The emitter current flowing in regulating transistor Q11 controls the operation of output transistor Q10, thus regulating the dc output voltage. Two 5 vdc outputs are provided (5 Vcc A and 5 Vcc B), and establish an initial relationship between the start and stop logic circuitry for all tape cartridges and the corresponding tray solenoids. This relationship is the same every time power is applied to the unit, and prevents all of the tray solenoids from energizing by setting the condition of the start/stop logic circuitry before power is applied to the tray solenoid drive circuitry. The 24 vdc output is delayed by the RC time constant of resistor R31 and capacitor C23, which controls the operating characteristics of transistor Q19. When the charge on capacitor C23 rises to a specific

level, transistor Q19 conducts, energizing relay K3 and providing 24 vdc at pins 21 through 24 of plug P6.

1-11. START/STOP LOGIC. When the START switch is pressed, a voltage is applied through the level 2 contacts of the stepper switch to the input of the one-shot start and stop circuit. The output of the one-shot circuit is applied to the set input of the start/stop logic, bi-stable multivibrator (flip-flop), and holds the flip-flop in the set condition. The output of the flip-flop is applied to the solenoid drive dc amplifier circuit, which energizes the tray solenoid, and also to a data cell (optic relay), which permits transmission of audio signals to the unit output. An auxiliary signal path is provided from the solenoid drive dc amplifier, through a diode, to the front panel tray indicator lights, resulting in illumination of the appropriate indicator light.

1-12. Two control tones are recorded on the cue track for normal self-contained operation of the unit: 1000 Hz stop tone at the beginning of the message, and 150 Hz stepper advance tone. The 1000 Hz stop tone is automatically recorded on the cue track when a message or other audio information is recorded on the program track. The 1000 Hz tone is located just ahead of the audio information and causes the solenoid to disengage, stopping the tape just before the message begins. A 3-4 second delay in the start/stop logic provides for the inclusion of identification information (decode) on the cue track. The 1000 Hz tone is applied through a pre-amplifier and shaping circuit to the reset input of the start/stop logic flip-flop, causing the solenoid to deenergize. The 150 Hz tone must be recorded by manual means by an operator when recording a message or other audio on the program track. The 150 Hz tone is recorded on the cue track immediately after the conclusion of the audio information, and causes the stepper switch to advance to the next position.

1-13. DECODE TONE PROCESSING. In the broadcasting industry, the decode interval is commonly used to incorporate identification tones that are used for program logging. The actual interval for recording decode tones is approximately 5 seconds, during which a sequence of tones (code) representing a specific client is recorded. The decode information is picked up by the cue head, and is applied to the data summing amplifier through the cue channel preamplifier. The output of the decode data amplifier is applied to the unit decode output through a data cell (optic relay). The data cell is controlled by the CUE switch, which is located on the unit panel. When the CUE switch is pressed, the data cell is turned off, preventing the logging of decode data. Actuation of the CUE switch also diverts the program material from the program output of the cue output, enabling the operator to monitor a cartridge in the Instacart without interrupting associated equipment.

1-14. AUDIO PROCESSING. Audio information is picked up by the

program head, and is applied to the input of the unequalized pre-amplifier. The audio is applied to the resistive summing junction through the data cell (optic relay), which is controlled by the start/stop logic. The summing resistors form the input circuit for the equalized summing amplifier. The summing amplifier, which is equalized to a standard 7½ IPS NAB curve, is compensated for all non-linear responses of associated components. The output of the summing amplifier is applied to the linear line amplifier, and then to the unit audio output transformer. The unit output impedance is 500 ohms balanced.

SECTION 2

INSTALLATION

2-1. GENERAL

2-2. The Instacart is shipped disassembled to facilitate packaging and ensure adequate isolation of unit assemblies during transportation. The unit is intended to be mounted in a vertical rack fitted with standard equipment mounting rails. The major assemblies of the unit (main frame and electronic chassis) are fitted with integral mounting rails to aid in installation. Mechanical and electrical installation instructions are described in detail in the following paragraphs.

2-3. MECHANICAL INSTALLATION

2-4. The following mechanical installation procedures and cautions are provided to ensure efficient, safe installation of the Instacart, and should be observed as closely as possible.

(1) When uncrating the main frame of the unit, use the horizontal crossbars on the front to aid in lifting.

CAUTION

UNDER NO CIRCUMSTANCES SHOULD ANY OF THE FOUR-CAPSTAN DRIVE MOTORS OR THE FORTY-EIGHT SOLENOIDS BE USED TO AID IN LIFTING OR MOVING THE MAIN FRAME. THE CAPSTAN DRIVE MOTORS ARE MANUFACTURED AND ADJUSTED TO EXTREMELY LOW TOLERANCES, AND SHOULD BE PROTECTED DURING INSTALLATION AND ALL SUBSEQUENT MOVEMENT OF THE MAIN FRAME.

NOTE

The distance between the front and rear mounting rails of the equipment rack must be 16 inches.

(2) The integral mounting rails on the main frame should contact the rear of the front mounting rails of the equipment rack; therefore, the main frame must first be positioned inside the equipment rack. Rotate the main frame approximately 45 degrees on a vertical axis, and carefully slide it through the mounting rails, right end first.

CAUTION

BE SURE THE MAIN FRAME IS ORIENTED SO THAT THE RIGHT SIDE PASSES BETWEEN THE EQUIPMENT RACK MOUNTING RAILS FIRST. THIS WILL AVOID POSSIBLE DAMAGE TO THE EXTREME RIGHT-HAND CAPSTAN DRIVE MOTOR.

(3) When the main frame is positioned inside the equipment rack, straighten its orientation with respect to the mounting rails, and pull it forward until the mounting rails engage. Secure the main frame using nut, bolt, and lock washer combination at a minimum of three points on each of the main frame mounting rails.

(4) Install the electronic chassis on the rear mounting rails of the equipment rack. Locate the electronic chassis so that the bottom is even with the bottom of the main frame mounting rails. Secure the electronic chassis using nut, bolt, and lock washer combination at two point on the chassis mounting brackets.

2-5. ELECTRICAL INSTALLATION

2-6. Electrical installation of the Instacart consists of installing the PCBs, and interconnecting the front panel, main frame, and electronic chassis.

(1) Before installing the Instacart panel, connect the main frame to the electronic chassis using the small plug (P11) (Refer to figure 3, Section VI, for location of plugs). Connect the panel to the electronic chassis using the two larger plugs (P9 and P10) (connect the plugs as shown in figure 3, Section VI). Position the panel on the lower section of the main frame and press into place.

NOTE

Each main audio PCB must be installed in its corresponding plug: for example, board PC1 must be installed in plug P1, PC2 must be installed in plug P2, etc. Once the audio and data PCBs have been installed, do not interchange.

(2) Install the six PCBs in their respective connectors on the electronic chassis. Connect the 48 audio plugs to the four main audio PCBs, installing the top audio plug to the top connector, and so on, until the twelve audio plugs are connected (refer to figure 16, Section VI, for location of the audio plugs).

SECTION 3

OPERATION

3-1. GENERAL

3-2. Refer to figure 2 for an illustration of the unit showing the control and indicator panel and the tape cartridge arrays of the main frame. Reference will be made throughout this section to the tray indicator lights and switches located on the control panel. Provisions have been made in the unit to permit remote operation; however, operation within the scope of this document will involve that which can be performed at the control panel only. Refer to Table 2 for a list of unit switches and their corresponding functions.

SWITCH	FUNCTION
POWER	Applies 115 vac, 60 Hz power to the input transformer of the power circuits and the capstan drive motors when pressed.
HOME	Enables the operator to cycle the stepper switch rapidly through its 48 switch positions, which correspond to the 48 available channels and their associated tape cartridges. The stepper switch begins to cycle when the HOME switch is pressed, and stops when the switch is released or when the stepper switch reaches position 1. If the HOME switch is in position 1, the STEP switch must be pressed to advance the stepper switch beyond position 1.
STEP	Enables the operator to cycle the stepper switch one position at a time. When the STEP switch is pressed, the stepper switch advances to the next position and stops.
START	Enables the operator to start the tape cartridge associated with the position of the stepper switch. When the switch is pressed, the tray solenoid associated with the stepper switch position is energized, pulling the tray and tape cartridge into run position.

Table 2. List of Switches and Operating Functions

STOP	Enables the operator to stop the tape cartridge associated with the position of the stepper switch. When the switch is pressed, the tray solenoid deenergizes, allowing the tape cartridge to separate from the capstan drive and the pickup head. It should be noted that the tray solenoid will deenergize only upon completion of a 10-second time delay implemented during retrieval of data from the cue track.
CUE	The primary purpose of this switch is to enable the operator to transfer the program output to the cue output for monitoring a tape cartridge. When the switch is pressed, the audio output is rerouted from the program output to a special cue output.
MASTER STOP	Enables the operator to stop all cartridges regardless of the position of the stepper switch.

Table 2. List of Switches and Operating Functions

3-3. PRELIMINARY OPERATING PROCEDURES

3-4. Familiarization with preparatory procedures is essential for efficient, reliable operation of the unit. The information included in the following paragraphs involves the installation of the tape cartridge on the tray, installation of the tray in the main frame, types of operating configurations available, and observations to be made while preparing or changing the unit format.

(1) WHEN INSTALLING THE TAPE CARTRIDGE, ENSURE THAT THE CARTRIDGE BRAKE SPRING IS POSITIONED UNDER THE PINCH ROLLER. When the cartridge is positioned on the tray, observe the amount of front-to-rear movement; this movement should be approximately 1/16 of an inch. If the amount of cartridge movement is unsatisfactory, loosen the two screws securing the tray handle and adjust the back-up bracket accordingly.

NOTE

If adhesive labels are used for identification of the tape cartridges, avoid excessive label buildup in order to ensure adequate cartridge movement on the tray.

(2) Install the tray in the main frame and slide into place until the restraining spring engages the locking pin on the tray.

3-5. The unit can be operated in one of two modes: sequential mode or random select mode. The operating mode is selected by the SEQ/AUTO switch (Refer to figure 6 for location of switch). The Instacart is shipped from the factory with the SEQ/AUTO switch set to SEQ position, resulting in the sequential operating mode. To change the mode of operation, set the SEQ/AUTO switch to AUTO position. The differences between the operating modes can be most easily defined in terms of the visual indications and inherent capabilities of each.

3-6. When operating in the sequential mode, a tray indicator light on the unit front panel will be on at all times, indicating the position of the stepper switch. An additional tray indicator light will be on when a tape cartridge is running. It is conceivable that the aforementioned tray indicator lights can be one in the same; however, since the tape cartridge that is running will continue until acquisition of the 1000 Hz stop signal, and the stepper switch can be manually or automatically advanced during this interval, it is also possible to have two tray indicator lights on at the same time. In this operating configuration, the stepper switch will automatically advance to the next position when a start command is applied to TB5-7. If it is desired that the stepper should advance at the 150 Hz auxiliary tone, remove R34 (1.5K 1/2w) from the Regulator PCB and install R34 (2.2K 1/4w) on the Audio and Sensor PCB.

3-7. When operating in the random select mode, a tray indicator light will be on at all times, on the unit front panel, when a tape cartridge is running. When the CUE switch is pressed, a tray indicator light will come on, indicating the position of the stepper switch. It is possible to have two or more tray indicator lights on at the same time.

3-8. OPERATING PROCEDURES

3-9. Once the operator is familiar with the functions of the front panel switches and the characteristics unique to each of the operating modes, operation of the Instacart is practically self-explanatory. Since the tray indicator lights convey the condition of the unit at any given time, the operator must interpret and evaluate the indications while the unit is operating. The following step-by-step procedures are applicable to both modes of operation.

(1) Press the POWER switch to apply 115 vac to the capstan drive motors and the power transformer of the power supply.

(2) To select the desired tape cartridge, use the STEP or HOME switch.

NOTE

The HOME switch is inoperable when the stepper switch is in the 1 position. The STEP switch must be used to advance the stepper beyond position 1, then the HOME switch can be used.

(3) When the desired tape cartridge has been selected, press the START switch to energize the tray solenoid, applying capstan drive to the selected cartridge.

(4) To manually stop the tape cartridge, press the STOP switch.

NOTE

A timing circuit for each tape cartridge implements a 10-second delay as soon as the cartridge starts. During the delay, operation of the STOP switch does not stop the tape cartridge.

3-10. Operation of the CUE switch is the only exception to the preceding procedures. When the unit is set up for sequential operating mode, use of the CUE switch will reroute the audio signal from the normal audio output to a monitoring point. When the unit is set up for random select operating mode, use of the CUE switch will, in addition to providing an output for monitoring, cause a tray indicator light to come on, indicating the position of the stepper switch.

NOTE

When the unit is being operated in either mode, do not use the CUE switch to determine the position of the stepper switch while a tape cartridge is on the air.

3-11. Programming requirements occasionally will necessitate cueing up tape cartridges back to back. This practice will result in several cartridges running at the same time, which in itself is not undesirable; however, keep in mind that the excess run time (the interval between the end of the message and acquisition of the stop tone) should be kept to a minimum in order to prevent more than eight cartridges from running at the same time.

SECTION 4

MAINTENANCE

4-1. GENERAL

4-2. The maintenance instructions consist of procedures involving inspection, cleaning, routine adjustment, functional tests, trouble analysis, and disassembly. The inspection, cleaning and routine adjustment instructions are presented on a time compliance basis, and should be performed in accordance with the frequency prescribed to ensure reliable, efficient operation of the unit. The functional test procedures provide criteria indications to aid in determining the performance level of the unit. In order to expedite trouble analysis of the unit, the functional test procedures are organized into groups corresponding to functional circuits in the unit. Troubleshooting procedures are included to aid in isolating a malfunction to the most probable circuit involved. Procedures are included to permit efficient disassembly of the unit should it be necessary to repair or replace assemblies or subassemblies.

4-3. PREVENTIVE MAINTENANCE

4-4. INSPECTION. Perform a periodic inspection of the unit on a 90-day basis, observing the following areas for evidence of wear, damage or misalignment.

(1) Visually inspect the unit tray indicator lights for lens damage.

(2) Remove the trays and inspect the pinch rollers for excessive wear. Check rotational movement of pinch roller to determine if bearing or shaft has sustained damage.

(3) Visually inspect the tape heads for evidence of wear deterioration.

(4) Visually inspect engagement hook and mechanical assembly for any obvious evidence of wear or misalignment.

NOTE

Adjustment of the linkage assembly is extremely critical and must be performed in conjunction with precision equipment only; therefore, if the visual inspection indicates that any part of the mechanical assembly has sustained

damage and requires repair or replacement, the assembly must be returned to the factory.

(5) Visually inspect electrical connectors and wiring for evidence of damage or deterioration.

(6) Visually inspect PCB's for evidence of damage, including cracked or shorted printed wiring, and inspect electronic components on PCB's for evidence of displacement or damage.

4-5 CLEANING AND LUBRICATION. A regular schedule of cleaning and lubrication requirements should be established and adhered to. The following cleaning and lubricating procedures include the minimum time intervals recommended by the factory.

(1) Each week, or after 100 plays of each cartridge, clean the tape heads, pinch rollers, and capstan drive shafts using commercially available Xylene solvent.

CAUTION

WHEN CLEANING TAPE HEADS AND CAPSTAN DRIVE SHAFTS, AVOID CONTACTING CAPSTAN DRIVE SHAFT BEARINGS WITH SOLVENT. ANY CONTACT WITH SOLVENT WILL DISSOLVE THE BEARING LUBRICANT, ULTIMATELY RESULTING IN BEARING FAILURE. AN ABSORBENT RAG OR BLOTTER CAN BE USED AROUND THE SHAFT ABOVE THE BEARING TO PREVENT ACCIDENTAL DAMAGE.

(2) Clean pinch roller bearing with commercially available Xylene. Lubricate pinch rollers with Shell Tellus 25 oil only when necessary to prevent pinch rollers from sticking.

CAUTION

TO AVOID EQUIPMENT FAILURE OR DOWN TIME, USE ONLY A FRACTIONAL DROP OF OIL ON THE CENTER AREA OF EACH PINCH ROLLER, EXERCISING EXTREME CAUTION NOT TO ALLOW ANY OIL ON THE OUTSIDE SURFACE OF THE PINCH ROLLERS, THE TAPE, CAPSTAN, OR SIDES OF THE CART.

4-6 ADJUSTMENT

4-7 Mechanical adjustment of the unit is limited to adjustment of the tray restraining spring; all adjustments to the individual tray mechanical assemblies must be made at the factory. Electrical adjustment consists of the 150 Hz input sensitivity adjustment, +10 and -10 volt power supply output adjustments, and head demagnetization.

(1) Tray Restraining Spring Adjustment.
Install trays in main frame, sliding tray until restraining spring engages locking pin. Check the amount of front-to-rear movement of each tray. If the movement exceeds 1/16 inch, increase the tray restraining spring tension by pressing it downward.

NOTE

Ensure that tray restraining spring does not contact tray on either side of the round head rivet. This contact will cause increased resistance to movement of the tray, and can result in tray engagement malfunctions.

(2) Power Supply Adjustment

(a) Using a vtvm, check the dc output voltages at the test points on the regulator PCB; the Green test points are for +10 vdc, the White is 5 vdc, and the Red is 24 vdc. If it is necessary to adjust the + or - 10 vdc supply, perform the following steps.

NOTE

The following test points and adjustment components are located on the regulator PCB (Refer to figure 15 for an illustration of the regulator PCB).

(b) Using a vtvm, connect ground lead to chassis and input lead to the -10 vdc test point. Adjust potentiometer R14 for -10.0 ±0.5 vdc as indicated by vtvm.

(c) With the ground lead of the vtvm connected to chassis, connect the input lead to the +10 vdc test point. Adjust potentiometer R18 for 10.0 ±5 vdc as indicated by vtvm.

(3) 150 Hz Sensitivity Adjustment

NOTE

The following adjustment component is located on the audio and sensor PCB (Refer to figure 14 for an illustration of the PCB).

(a) Record an NAB standard, +6 dbm, 150 Hz tone on a tape cartridge and install the cartridge in the Instacart. Using the HOME or STEP switch, select the cartridge for playback.

(b) Turn potentiometer R32 to its full counterclockwise position. Press the START switch and observe relay K5. Adjust R32 clockwise until the relay energizes; for best reliability, increase R1 slightly beyond this point.

(4) Head Demagnetization

(a) To determine if head demagnetization is necessary, set audio output to maximum and tap the pickup head with the fingernail. If a click is detected at the output, the head requires demagnetization.

CAUTION

BEFORE ATTEMPTING TO PERFORM A HEAD DEMAGNETIZATION, ENSURE THAT ALL POWER TO THE INSTACART HAS BEEN DISCONNECTED.

(b) Disconnect all of the 48 head and solenoid plugs.

(c) Using a tape head degaussing coil, demagnetize all tape heads.

(d) Reconnect the 48 head and solenoid plugs, and connect and apply power to the Instacart.

4-8. FUNCTIONAL TEST

4-9. Any testing performed to isolate malfunctions must be performed while the unit is intact, and for this reason, testing is limited to operation of the Instacart. Familiarization with Instacart operating characteristics is mandatory when performing an operational test, and will assist the operator when interpreting erroneous indications should they occur. The following operating procedures will exercise all of the unit functional circuits, and should be performed in the sequence indicated.

(1) Press the POWER switch and check that capstan drive motors begin to rotate.

(2) Press the STEP switch at least five times, ensuring that the stepper switch advances each time.

(3) Press and hold the HOME switch, and ensure that the stepper switch advances from position to position until it reaches position 1.

(4) Check to see which tape cartridge is selected for play by the stepper switch. Press the START switch and observe the selected tape cartridge to ensure that the tray solenoid energizes and the tape engages the capstan drive shaft.

(5) Press the CUE switch and monitor the quality of the audio output. Allow the tape cartridge to run until the 150-Hz advance tone is acquired. The stepper switch should automatically advance to the next position. The tape will continue to run until the 1000-Hz stop tone is acquired. At this time, the tray solenoid should deenergize and the tape should stop.

4-10. TROUBLESHOOTING

4-11. The following procedures provide a guide to the isolation of troubles. They are intended to isolate troubles to circuits or groups of components, and not to individual components. Check the circuits or components indicated in Table 3 to isolate the cause of the trouble, using standard troubleshooting procedures. Refer to the wire list, Table 4, to aid in following signal lines from point-to-point, and to schematic diagrams, figures 6 to 13, to aid in analyzing circuits.

NOTE

If, while troubleshooting the Instacart, it is determined that the mechanical assembly is defective or out of adjustment, carefully remove the assembly from the Instacart and return it to IGM for repair or adjustment. IGM will provide, by the most expeditious means available, a replacement assembly to be used in the interim. Mechanical assemblies are available separately, and can be purchased for use as spares if desired.

GENERAL (Refer to figure 6)

Symptom: Instacart completely inoperative.

Remedy: Check fuse F1. Replace, if necessary, with a 2 ampere fuse.

Symptom: Fuse checks okay, but unit gives no indication of having power.

Remedy: Check that regulator PCB is properly inserted in its socket. Check POWER switch for proper operation and continuity.

Table 3. Troubleshooting.

TRAY CONTROL LOGIC (Refer to figures 4 and 5)

Symptom:	None of the trays will energize from manual START switch.
Remedy:	Check START switch for proper operation.
Symptom:	A particular tray will not energize from manual START switch.
Remedy:	Check tray retaining spring for proper adjustment (Refer to IV, 4-7). Check wiring between stepper switch contact and appropriate pin on PCB plug for that tray. 5 vdc should be present at the appropriate pin of the PCB plug when START switch is pressed. This pulse should also be present at pin 5 or pin 10 of IC3. Check IC3 for proper operation. Check driver transistors associated with that particular tray. Check the head and solenoid plug for proper insertion into the socket. Check continuity of solenoid. If solenoid is open or if mechanical linkage is faulty, remove the assembly and replace with factory adjusted assembly.
Symptom:	Tray energized and plays but will not sense auxiliary or cue tone.
Remedy:	Check the playback head by connecting the head and solenoid plug associated with the malfunctioning tray to an adjacent connector on the audio and data PCB. If the head is good, check IC1 for proper operation. Check tape cartridge for proper tone level.
Symptom:	Tray senses auxiliary tone but cartridge will not cue.
Remedy:	Check the playback head by connecting the head and solenoid plug associated with the malfunctioning tray to an adjacent connector on the audio and data PCB. If the head is good, check coupling capacitor on the output of the two track amplifier. Check rectifier and filtering circuitry on input of IC2. Check operation of IC2. Check operation of IC3. Check associated driver transistors.

Table 3. Troubleshooting.

Symptom:	Tray will not start from remote terminal strip TB5 (sequential mode).
Remedy:	Check wiring between TB5 and power supply PCB. Check wiring between power supply PCB and stepper switch.
Symptom:	Tray will not start from remote control plug P8 (random select mode).
Remedy:	Check appropriate pin in P8 for good connection. Check wiring between P8 and PCB plug. Check series 150 ohm resistor mounted on PCB for that particular tray. Check logic portion of circuit noted above for manual start problems.
Symptom:	Tray will not stop when manual STOP switch is pressed.
Remedy:	Check STOP switch for proper operation. Check wiring between STOP switch and armature of stepper switch stop level. Check wiring between stepper switch stop level and appropriate PCB plug. 24 vdc should be present at appropriate pin on PCB plug when STOP switch is pressed. Check logic portion of circuit noted above for cue problems.
AUDIO CIRCUITRY	
Symptom:	Tray functions normally in all operations but there is no audio output.
Remedy:	Refer to figure 4 for circuit location of following components. Check plug connections. Connect head and solenoid plug associated with malfunctioning tray to an adjacent connector on the audio and data PCB to check the playback head. Check IC1 associated with the malfunctioning channel. Check coupling capacitor on output of IC1. Check data cell associated with the specific tray.
Symptom:	Unit functions normally in all aspects but none of the trays provide an audio output.
Remedy:	Refer to figure 13 for circuit location of

Table 3. Troubleshooting (continued)

following components. Check for audio at pin 17 of the audio and sensor PCB. Check for shorted C1. Check for audio output at pin 13 of IC1. Check for audio at input pin 5 of IC1. Check transistors Q4 and Q5. Check audio output transformer T4. Check CUE switch for proper continuity. Check wiring between these points for proper continuity.

150 Hz SENSOR (Refer to figures 7 and 14)

Symptom: Sensor will not operate K5 on audio and sensor PCB.

Remedy: Refer to above section pertaining to tray control logic. Is 150 Hz tone present at data input, pin 37 of the audio and sensor PCB? Check operation of IC3. Check coupling capacitor C23. Check for input and output on IC3, pins 5 and 1 respectively.

Symptom: K5 on the audio and sensor PCB operates more than once when sensing an auxiliary tone.

Remedy: Increase sensor input sensitivity control (R32) a small amount. Sensor is trying to follow the alternations of the tone.

Symptom: Sensor operates when a auxiliary tone is not present.

Remedy: Decrease input sensitivity. Check for noise on tape.

Symptom: 150 Hz tones are present at sensor input and unit still doesn't operate.

Remedy: All transistors can be checked on the audio and sensor PCB by using an ohmmeter. This method will indicate only if the transistor is open or shorted. Replace defective transistor. Check relay K5 for continuity. Check connections between audio and sensor PCB plug and TB-5. If continuity checks good, replace IC4.

Table 3. Troubleshooting (continued)

NOTE: If it is determined the 150-Hz sensor has drifted off frequency, it is suggested it be returned to IGM for proper tuning or repair. A replacement unit can be supplied during this period.

STEPPER SWITCH CONTROL CIRCUITRY (Refer to figure 12)

Symptom:	Stepper switch doesn't step in sequential operation, but auxiliary tone causes automation to switch.
Remedy:	Check contacts of K5 on audio and sensor PCB. Check stepper drive circuitry on regulator PCB.
Symptom:	Stepper switch will not step when operated from STEP switch.
Remedy:	Check STEP switch for proper operation. Check stepper drive circuitry on regulator PCB.
Symptom:	Stepper switch will not home.
Remedy:	Check HOME switch for proper operation. Check home contacts on stepper switch for proper operation. Check circuitry between HOME switch and stepper drive circuitry on regulator PCB. Check interrupter contacts for proper operation.
Symptom:	Tray indicator light operates properly in association with the stepper switch, but not when a tray is running.
Remedy:	Blocking diode(1N270) associated with that particular tray is open.
Symptom:	Tray solenoid energizes as soon as stepper switch is advanced to a particular tray.
Remedy:	Blocking diode associated with that tray is shorted.

POWER SUPPLY (Refer to figures 15 - 17)

If problems in power supply are suspected, check all items under GENERAL portion of troubleshooting guide.

Table 3. Troubleshooting....
(continued)

Symptom:	Unit has no 24 vdc.
Remedy:	Check pins 17 and 19 on regulator PCB for 26 vrms. Check bridge rectifier BR2 for AC at input and rectified AC at output. Check regulating transistors Q5, Q6, Q7 and Q8 for proper operation. Check relays K2, K3 and K4 for proper operation. Check pins 4, 9 through 12, 17 through 20, 21 through 24, 27, 59 and 60.
Symptom:	Unit has no VCCB (+5vdc).
Remedy:	Check pins 31 and 35 on regulator PCB for 8 vrms. Check bridge rectifier BR1 for AC input and rectified AC output. Check regulating transistors Q1, Q2, Q3 and Q4. Check pins 31, 32, 35, 36, 49 and 50.
Symptom:	Unit has no VCCA (+5vdc delayed).
Remedy:	Check above items under VCC B remedies. Check above items under 24 vdc remedies. Check pins 41 and 42 on regulator PCB for damage.
Symptom:	Unit has no + or - 10 vdc.
Remedy:	Check pins 37 and 39 on regulator PCB for 25 vrms. Check bridge rectifier BR3 for AC on the input and rectified AC on the output. Check regulator transistors Q9 through Q16 for proper operation. Check pins 29, 30,33, 34, 37 through 40, and 43 through 48 of regulator PCB for damage.

TRAY MOVEMENT

Symptom:	Tray pulls in properly when empty, but not when loaded with cartridge.
Remedy:	Examine cartridge to insure indentation

Table 3. Troubleshooting....
(continued)

	for shaft is sufficient to allow shaft to meet pinch roller. Make sure cartridge is able to move freely on the tray. If not, cartridge pusher bracket may be too tight or cartridge oversize. Check brake spring in cartridge to make sure it is below pinch roller when loaded on tray.
Symptom:	Empty tray does not move freely when engaged by solenoid.
Remedy:	Check tray to insure that it is flat (not warped or bent). Check edges to insure that there are no burrs or imperfections which catch in grooves on side of main frame. Check bearing to insure it rotates freely when engaged by engagement hook.

Table 3. Troubleshooting.

TERMINATION TO	TERMINATION FROM	SIGNAL NAME	COLOR
The following pins are on plug P1, P3, P5 or P7 unless otherwise specified.			
1 and 2	GND buss	Board Shield	----
P10-B, R, d, or t	3	Light No. 2, 14, 26, or 38	Brown
P10-A, P, c, or s	4	Light No. 1, 13, 25, or 37	Black
P10-D, T, f, or v	5	Light No. 4, 16, 28, or 40	Orange
P10-C, S, e, or u	6	Light No. 3, 15, 27, or 39	Red
P10-F, V, j, or x	7	Light No. 6, 18, 30, or 42	Green
P10-E, U, h, or w	8	Light No. 5, 17, 29, or 41	Yellow
P10-J, X, l, or z	9	Light No. 8, 20, 32, or 44	Purple
P10-H, W, k, or y	10	Light No. 7, 19, 31, or 43	Blue
P10-L, Z, n, or BB	11	Light No.10, 22, 34, or 46	White
P10-K, Y, m, or AA	12	Light No. 9, 21, 33, or 45	Grey
P10-N, b, r, or DD	13	Light No. 12, 24, 36, or 48	Blue/White
P10-M, a, p, or CC	14	Light No. 11, 23, 35, or 47	Brown/White
----	15 and 16	Blank	----

Table 4. Instacart Wire List....
(continued)

TERMINATION TO	FROM	SIGNAL NAME	COLOR
57 and 58	----	Start No. 9, 21, 33 and 45	Grey
59 and 60	----	Start No. 8, 20, 32 and 44	Purple
61 and 62	----	Start No. 7, 19, 31 and 43	Blue
63 and 64	----	Start No. 6, 18, 30 and 42	Green
65 and 66	----	Start No. 5, 17, 29 and 41	Yellow
67 and 68	----	Start No. 4, 16, 28 and 40	Orange
69 and 70	----	Start No. 3, 15, 27 and 39	Red
71 and 72	----	Start No. 2, 14, 26 and 38	Brown
73 and 74	----	Start No. 1, 13, 25 and 37	Black

Table 4. Instacart Wire List...
(continued)

TERMINATION		SIGNAL NAME	COLOR
TO	FROM		
Audio buss	17 and 18	Left audio	Shield
Audio buss	19 and 20	Right audio	Shield
+24 vdc buss	21 and 22	+24 Reg	----
----	23 and 24	Blank	----
Ground A buss	25 and 26	GND A	----
----	27 and 28	Blank	----
-10 vdc buss	29 and 30	-10 vdc	----
----	31 and 32	Blank	----
+10 vdc buss	33 and 34	+10 vdc	----
----	35 and 36	Blank	----
Data buss	37 and 38	Data	Shield
----	39 and 40	Blank	----
Vcc A buss	41 and 42	Vcc A	----
----	43 and 44	Blank	----
Ground B buss	45 and 46	GND B	----
----	47 and 38	Blank	----
Vcc B buss	49 and 50	Vcc B	----
51 and 52(remote)	----	Start No. 12, 24,36, and 48	Blue/White
53 and 54(remote)	----	Start No. 11, 23, 35, and 47	Brwn/White
55 and 56(remote)	----	Start No. 10, 22, 34, and 46	White

Table 4. Instacart Wire List...
(continued)

TERMINATION		SIGNAL NAME	COLOR
TO	FROM		
75	-----	Stop No.12,24,36, or 48	Blue/White
-----	78	Blank	-----
77	-----	Stop No. 11,23,35, or 47	Brwn/White
-----	80	Blank	-----
79	-----	Stop No. 10,22,34, or 46	White
-----	82	Blank	-----
81	-----	Stop No. 9,21,33, or 45	Grey
-----	84	Blank	-----
83	-----	Stop No. 8,20,32, or 44	Purple
-----	86	Blank	-----
85	-----	Stop No. 7,19,31, or 43	Blue
-----	88	Blank	-----
87	-----	Stop No. 6,18,30, or 42	Green
-----	90	Blank	-----
89	-----	Stop No. 5,17,29, or 41	Yellow
-----	92	Blank	-----
91	-----	Stop No. 4,16,28, or 40	Orange
-----	94	Blank	-----
93	-----	Stop No. 3,15,27, or 39	Red

Table 4. Instacart Wire List....
(continued)

TERMINATION			
TO	FROM	SIGNAL NAME	COLOR
-----	96	Blank	-----
95	-----	Stop No. 2,14,26, or 38	Brown
-----	98	Blank	-----
97	-----	Stop No. 1,13,25, or 37	Black
-----	99 and 100	Board shield	-----
The following pins are on plug P2 unless otherwise specified.			
-----	1 and 2	Board shield	-----
-----	3 through 9	Blank	-----
Right audio Output	10	Right channel audio Output (HI)	Shield
-----	11	Blank	-----
Right audio Output	12	Right channel audio Output (LO)	Yellow
-----	13	Blank	-----
Left audio Output	14	Left channel audio Output (HI)	Shield
-----	15	Blank	-----
Left audio Output	16	Left channel audio Output (LO)	Green
Left audio buss	17 and 18	Left audio input	Shield
Right audio buss	19 and 20	Right audio input	Shield

Table 4. Intacart Wire List....
(continued)

TERMINATION		SIGNAL NAME	COLOR
TO	FROM		
+24 vdc buss	21 and 22	+24 vdc	----
----	23 and 24	Blank	----
Ground A buss	25 and 26	GND A	----
----	27 and 28	Blank	----
-10 vdc buss	29 and 30	-10 vdc	----
----	31 and 32	Blank	----
+10 vdc buss	33 and 34	+10 vdc	----
----	35	Blank	----
Aux. relay N.O. contact	36	Aux. C N.O.	Black
Data buss	37 and 38	Data input	Shield
----	39	Blank	----
Aux. relay wiper	40	Aux. C wiper	Brown
Vcc A buss	41 and 42	Vcc A	----
----	43	Blank	----
Aux. relay N.C. contact	44	Aux. C N.C.	Red
Ground B buss	45 and 46	GND B	----
----	47	Blank	----
Aux. relay N.C. contact	48	Aux. B N.C.	----
Vcc B buss	49 and 50	Vcc B	----
----	51	Blank	----
Aux. relay wiper	52	Aux. B wiper	----
----	53	Blank	----

Table 4. Instacart Wire List....
(continued)

TERMINATION		SIGNAL NAME	COLOR
TO	FROM		
Aux. relay N.O. contact	54	Aux. B N.O.	Brown
----	55	Blank	----
Stepper switch driver	56 Aux. A N.O.	Output to stepper switch	Green
----	57	Blank	----
TB5-14	58	Data output	Yellow
----	59	Blank	----
Data Control	60	Data control	Red
----	61 and 62	Board shield	----
The following pins are on plug P6 unless otherwise specified.			
----	1	Board shield	White
----	2	Board shield	----
----	3	Blank	----
Emitter of Q6	4	Q6 emitter	Purple
----	5	Blank	----
P9-w	6	Master Stop	White
Stepper Switch interrupter contacts	7	Interrupter contacts	White
----	8	Blank	----
Collector of Q6	9 through 12	Q6 collector	Purple
----	13 and 14	Blank	----
Ground for audio shield	15 and 16	Audio shield GND	White
26 vac input	17 through 20	26 vac	Green

Table 4. Instacart Wire List.... (continued)

TERMINATION		SIGNAL NAME	COLOR
TO	FROM		
+24 vdc buss	21 through 24	+24 vdc	----
Ground A buss	25 and 26	GND A	----
Base of Q6	27	Q6 base	Brwn/White
----	28	Blank	----
-10 vdc buss	29 and 30	-10 vdc	----
8 vac input	31 and 32	8 vac	Yellow
+10 vdc buss	33 and 34	+10 vdc	----
8 vac input	35 and 36	8 vac	Yellow
25 vac C.T.	37 through 40	25 vac C.T.	Red
Vcc A buss	41 and 42	Vcc A	----
Ground B buss	43 through 48	GND B	----
Vcc B buss	49 and 50	Vcc B	----
Manual step (S3)	51	Man step (S3)	Green
Stop (S6)/Remote stop (TB5-8)	52	Stop (S6)/Remote (TB5-8)	Grey
Stepper switch level 2 wiper	53	Level 2 wiper (Stepper switch)	Orange
Remote start (TB5-7)	54	Remote start (TB5-7)	Blue
Stepper switch level 3 wiper	55	Level 3 wiper (Stepper switch)	Red
K1 Stepper switch solenoid	56	K1 Stepper switch solenoid	Blue/White
Start (S1)	57	Start (S1)	Yellow
Auxiliary stepper relay	58	Aux. Step. relay	Green

Table 4. Instacart Wire List....
(continued)

TERMINATION		SIGNAL NAME	COLOR
TO	FROM		
Emitter of Q6 (+24 B)	59 and 60	+24 B Emitter Q6	Red
----	61 and 62	Board shield	----
The following pins are on plug P10 unless otherwise specified.			
A	Light 1A	--	Black
B	Light 2A	--	Brown
C	Light 3A	--	Red
D	Light 4A	--	Orange
E	Light 5A	--	Yellow
F	Light 6A	--	Green
H	Light 7A	--	Light blue
J	Light 8A	--	Purple
K	Light 9A	--	Grey
L	Light 10A	--	Tan
M	Light 11A	--	Blue
N	Light 12A	--	Pink
P	Light 13A	--	Black
R	Light 14A	--	Brown
S	Light 15A	--	Red
T	Light 16A	--	Orange
U	Light 17A	--	Yellow
V	Light 18A	--	Green

Table. 4. Instacart Wire List.... (continued)

TERMINATION			
TO	FROM	SIGNAL NAME	COLOR
W	Light 19A	--	Light blue
X	Light 20A	--	Purple
Y	Light 21A	--	Grey
Z	Light 22A	--	Tan
a	Light 23A	--	Blue
b	Light 24A	--	Pink
c	Light 25A	--	Black
d	Light 26A	--	Brown
e	Light 27A	--	Red
f	Light 28A	--	Orange
h	Light 29A	--	Yellow
j	Light 30A	--	Green
k	Light 31A	--	Light blue
l	Light 32A	--	Purple
m	Light 33A	--	Grey
n	Light 34A	--	Tan
p	Light 35A	--	Blue
r	Light 36A	--	Pink
s	Light 37A	--	Black
t	Light 38A	--	Brown
u	Light 39A	--	Red
v	Light 40A	--	Orange

Table. 4. Instacart Wire List...
(continued)

TERMINATION TO	TERMINATION FROM	SIGNAL NAME	COLOR
W	Light 41A	--	Yellow
X	Light 42A	--	Green
Y	Light 43A	--	Light blue
Z	Light 44A	--	Purple
AA	Light 45A	--	Grey
BB	Light 46A	--	Tan
CC	Light 47A	--	Blue
DD	Light 48A	--	Pink
All lights 1B through 48B are connected to the +24 vdc buss.			
EE	TS-1	--	Red
FF	TS-2	--	Red
HH	TS-3	--	Red
JJ	TS-4	--	Red
The following pins are on plug P9 unless otherwise specified.			
A	S1-1 (POWER)	115 vac	Grey
B	S1-1 (POWER)	115 vac	Grey
C	S1-3 (POWER)	115 vac	Grey
D	S1-3 (POWER)	115 vac	Grey
E	S1-5 (POWER)	115 vac	Grey
F	S1-5 (POWER)	115 vac	Grey

Table 4. Instacart Wire List....
(continued)

TERMINATION		SIGNAL NAME	COLOR
TO	FROM		
The following pins are on TB5, which is located on the rear of the electronic chassis.			
----	1	Left audio common	----
----	2	Left audio output	----
----	3	Left cue audio output	----
----	4	Right audio common	----
----	5	Right audio output	----
----	6	Right cue audio output	----
----	7	Remote start (5 vdc pulse or step) sequential	----
----	8	Remote stop (+24 vdc pulse) sequential	----
----	9	Aux. B relay N.O.contact	----
----	10	Aux. B relay N.C.contact	----
----	11	Aux. B relay wiper	----
----	12	Cue switch light (ground required to operate)	----
----	13	Power ground (GND B)	----
----	14	Data output (touch tones)	----
----	15	+5 vdc (Vcc A)	----
----	16	+24 vdc (+24A)	----

Table 4. Instacart Wire List.

4-12. DISASSEMBLY

4-13. Disassemble the unit only to the extent necessary for periodic maintenance or repair. Refer to Section 6, figures 1 through 19, for illustrations of the unit assemblies, subassemblies, and components referenced in the following procedures.

(1) The front panel must be removed in order to remove and replace an indicator light assembly or switch. The panel is held in place by four pressure clips, one at each corner, and can be easily removed by pulling on the handles provided on each end.

CAUTION

BEFORE REMOVING PCBs, INSURE INSTACART POWER IS OFF. EXTENSIVE DAMAGE TO PCB COMPONENTS, TAPE ERASURE, TAPE HEAD MAGNETIZATION, OR POWER SUPPLY DAMAGE CAN RESULT IF POWER IS APPLIED.

NOTE

When removing the audio and data PCBs, identify the PCB to plug relationship in order to preclude the possibility of interchanging the PCBs.

(2) The PCBs can be removed for repair or replacement without removing the electronic chassis from the equipment rack. Be sure to remove all audio plugs before attempting to remove an audio and data PCB.

(3) When removing the electronic chassis from the equipment rack, remove plugs P9, P10 and P11 and remove the twelve audio plugs from each of the four audio and data PCBs.

(4) To gain access to the power supply transformer T1 and the stepper switch, remove the protective cover on the rear of the electronic chassis. The electronic chassis wiring is contained inside the chassis housing, and is exposed for repair or replacement by removing the bottom cover of the chassis.

TERMINATION			
TO	FROM	SIGNAL NAME	COLOR
P1-74	P8-A	Remote Start 1	Black
P1-72	P8-B	2	Brown
P1-70	P8-C	3	Red
P1-68	P8-D	4	Orange
P1-66	P8-E	5	Yellow
P1-64	P8-F	6	Green
P1-62	P8-H	7	L. Blue
P1-60	P8-J	8	Purple
P1-58	P8-K	9	Grey
P1-56	P8-L	10	Tan
P1-54	P8-M	11	Blue
P1-52	P8-N	12	Pink
P3-74	P8-P	13	Black
P3-72	P8-R	14	Brown
P3-70	P8-S	15	Red
P3-68	P8-T	16	Orange
P3-66	P8-U	17	Yellow
P3-64	P8-V	18	Green
P3-62	P8-W	19	L. Blue
P3-60	P8-X	20	Purple
P3-58	P8-Y	21	Grey
P3-56	P8-Z	22	Tan
P3-54	P8-AA	23	Blue
P3-52	P8-AB	24	Pink

Table 4. Instacart Wire List....
(continued)

TERMINATION			
TO	FROM	SIGNAL NAME	COLOR
P5-74	P8-AC	Remote Start 25	Black
P5-72	P8-AD	26	Brown
P5-70	P8-AE	27	Red
P5-68	P8-AF	28	Orange
P5-66	P8-AH	29	Yellow
P5-64	P8-AJ	30	Green
P5-62	P8-AK	31	L. Blue
P5-60	P8-AL	32	Purple
P5-58	P8-AM	33	Grey
P5-56	P8-AN	34	Tan
P5-54	P8-AP	35	Blue
P5-52	P8-AR	36	Pink
P7-74	P8-AS	37	Black
P7-72	P8-AT	38	Brown
P7-70	P8-AU	39	Red
P7-68	P8-AV	40	Orange
P7-66	P8-AW	41	Yellow
P7-64	P8-AX	42	Green
P7-62	P8-AY	43	L. Blue
P7-60	P8-AZ	44	Purple
P7-58	P8-BA	45	Grey
P7-56	P8-BB	46	Tan
P7-54	P8-BC	47	Blue
P7-52	P8-BD	48	Pink
P2-40	P8-BE	Aux. Relay Arm	Black
TB5-12	P8-BF	Cue Light	Red
P2-36	P8-BH	Aux. Relay N.O.	Brown

Table 4. Instacart Wire List....
(continued)

TERMINATION			
TO	FROM	SIGNAL NAME	COLOR
P2-44	P8BJ	Aux. Relay N.C.	Red
TB5-5	P8BK	Right Audio	Orange
TB5-4	P8BL	Right Audio Common	Yellow
TB5-2	P8BM	Left Audio	Green
TB5-1	P8BN	Left Audio Common	Blue
TB5-6	P8BP	Right Cue	Purple
TB5-3	P8BR	Left Cue	Grey
TB5-13	P8BS	Ground	White
	P8BU	N.C.	
	P8BV	N.O.	8 KHz Contacts
	P8BW	Arm.	

TAble 4. Instacart Wire List....
(continued)

SECTION 5

REPAIR PARTS LIST

5-1. GENERAL

5-2. The repair parts list contains the major parts required to maintain the Instacart. The parts are listed in a tabular format, consisting of two columns: REF DES and DESCRIPTIONS. Illustrations are used to augment the parts list, and provide visual correlation between the individual components listed and the unit assemblies.

5-3. INTERPRETATION OF REPAIR PARTS LIST

5-4. In order to ensure accurate procurement of replacement parts, the information contained in the parts list columns must be used effectively. The following paragraph describes the parts list format and includes an explanation of the information presented in each of the columns.

5-5. The REF DES column contains the reference designation of the unit electrical components. The PCB assemblies are assigned reference designations; however, the major mechanical assemblies do not have reference designations. The DESCRIPTION column contains the standard identifying noun or item name, followed by the electrical characteristics and the manufacturer's name and part number when required.

5-6. The letters appearing in the USABLE ON CODE column denote applicability of individual components to monaural audio and data PCBs (A) or stereo audio and data PCBs (B). The absence of a USABLE ON CODE signifies that the component is used on both PCBs.

5-7. ORDERING REPAIR PARTS

5-8. If replacement parts are needed, order each part by part number (when listed), description, and reference designation, and give the model and serial number of the Instacart in which the part is to be used. To locate the part number when the location of the component is known, refer to the applicable illustration (figures 1 through 19), locate the component and note its reference designation. Locate the reference designation in the REF DES column of the parts list, and record the corresponding part number and description. If the reference designation or nomenclature of the component is known, simply locate the known data and record the remaining data necessary for procurement of the part.

Space for Personal Notations:

REF DES	DESCRIPTION	USABLE ON CODE
A1, A3, A5, and A7 AUDIO AND DATA PCB (Part No. 62-0094A)		
	AUDIO AND DATA PCB, Stereo (Part No. 62-0097A)	
C1	CAPACITOR, Disc, 0.001 mf	
C2	CAPACITOR, Mylar 0.056 mf	A
C2	CAPACITOR, Disc, 0.056 mf	B
C3	CAPACITOR, Disc, 0.005 mf	A
C3	CAPACITOR, Disc, 0.001 mf	B
C4	CAPACITOR, Mylar, 0.056 mf	A
C4	CAPACITOR, Mylar, 0.056 mf	B
C5	CAPACITOR, Disc, 0.01 mf	A
C5	CAPACITOR, Disc, 0.005 mf	B
C6	CAPACITOR, Electrolytic, 1 mf, 50 vdc	A
C6	CAPACITOR, Disc, 0.01 mf	B
C7	CAPACITOR, Disc, 0.47 mf, 10 vdc	A
C7	CAPACITOR, Mylar, 0.056 mf	B
C8	CAPACITOR, Disc, 0.01 mf	A
C8	CAPACITOR, Electrolytic, 1 mf, 50 vdc	B
C9	CAPACITOR, Disc, 0.01 mf	
C10	CAPACITOR, Electrolytic, 200 mf, 6 vdc	A
C10	CAPACITOR, Disc, 0.47 mf	B
C11	CAPACITOR, Disc, 0.01 mf	B
C12	CAPACITOR, Disc, 0.056 mf	A
C12	CAPACITOR, Electrolytic, 200 mf, 6 vdc	B
C13	CAPACITOR, Disc, 0.005 mf	

Table 5. Repair Parts

(continued)

REF DES	DESCRIPTION	USABLE ON CODE
C14	CAPACITOR, Mylar, 0.056 mf	A
C14	CAPACITOR, Mylar, 0.056 mf	B
C15	CAPACITOR, Disc, 0.01 mf	A
C15	CAPACITOR, Disc, 0.01 mf	B
C16	CAPACITOR, Electrolytic, 1 mf, 50 vdc	A
C16	CAPACITOR, Mylar, 0.056 mf	B
C17	CAPACITOR, Disc, 0.47 mf, 10 vdc	A
C17	CAPACITOR, Disc, 0.005 mf	B
C18	CAPACITOR, Disc, 0.01 mf	A
C18	CAPACITOR, Disc, 0.01 mf	B
C19	CAPACITOR, Disc, 0.01 mf	A
C19	CAPACITOR, Mylar, 0.056 mf	B
C20	CAPACITOR, Electrolytic, 200 mf, 6 vdc	A
C20	CAPACITOR, Electrolytic, 1 mf, 50 vdc	B
C21	CAPACITOR, Disc, 0.01 mf	B
C22	CAPACITOR, Disc. 0.47 mf	B
C23	CAPACITOR, Disc, 0.01 mf	B
C24	CAPACITOR, Electrolytic, 200 mf, 6 vdc	B
CA, CB, CC and CD	CAPACITOR, Disc, 0.01 mf	B
D1 through D8	DIODE (Part No. 1N270)	
DC1 and DC2	DATA CELL (Sigma Part No. 301R1-24)	
IC1 (A and B)	INTEGRATED CIRCUIT (Fairchild Part No. U6E7739393)	A
IC1	INTEGRATED CIRCUIT (Fairchild Part U6B7739393)	B

Table 5. Repair Parts
(continued)

IC2 and IC3	INTEGRATED CIRCUIT (Signetics Part No. LU380)	
Q1 and Q3	TRANSISTOR (Part No. 2N3704)	
Q2 and Q4	TRANSISTOR (Part No. 2N2222)	
R1	RESISTOR, 680 ohm, 5 pct, 1/4 w	A
R1	RESISTOR, 160 K, 5 pct, ¼ w	B
R2	RESISTOR, 160K, 5 pct, 1/4 w.	A
R2	RESISTOR, 680 ohm, 5%, ¼ w	B
R3	RESISTOR, 680 ohm, 10 pct, 1/4 w	A
R3	RESISTOR, 680 ohm, 5%, ¼ w	B
R4	RESISTOR, 1 M, 10 pct, ¼ w	A
R4	RESISTOR, 160 K, 5 pct, ¼ w	B
R5	RESISTOR, 100K, 10 pct, ¼ w	A
R5	RESISTOR, 100K, 5 pct, ¼ w	B
R6	RESISTOR, 100K, 5 pct, ¼ w	A
R6	RESISTOR, 100K, 10 pct, ¼ w	B
R7	RESISTOR, 270 ohms, 10 pct, ½ w	A
R8	RESISTOR, 47K, 10 pct, ¼ w	A
R8	RESISTOR, 100K, 5 pct, ¼ w	B
R9	RESISTOR, 1K, 10 pct, ¼ w	A
R9	RESISTOR, 270 ohms, 10 pct, ½ w	B
R10	RESISTOR, 100K, 10 pct, ¼ w	A
R10	RESISTOR, 1 megohm, 10 pct, ¼ w	B
R11	RESISTOR, 1K, 10 pct, ¼ w	A
R11	RESISTOR, 1 megohm, 10 pct, ¼ w	B

Table 5. Repair Parts
(continued)

R12	RESISTOR, 1K, 10 pct, ¼ w	A
R12	RESISTOR, 680 ohm, 10 pct, ¼ w	B
R13	RESISTOR, 47K, 10 pct, ¼ w	
R14	RESISTOR, 1K, 10 pct, ¼ w	
R15	RESISTOR, 1.5K, 10 pct, 1/2 w	A
R15	RESISTOR, 100K, 10 pct, ¼ w	B
R16	RESISTOR, 680 ohm, 10 pct, 1/4 w	A
R16	RESISTOR, 1K, 10 pct, ¼ w	B
R17	RESISTOR, 1 M, 10 pct, 1/4 w	A
R17	RESISTOR, 1K, 10 pct, ¼ w	B
R18	RESISTOR, 680 ohm, 5 pct, 1/4 w	A
R18	RESISTOR, 1K, 10 pct, ¼ w	B
R19	RESISTOR, 160K, 5 pct, 1/4 w	A
R19	RESISTOR, 1.5K, 10 pct, ½ w	B
R20	RESISTOR, 100K, 10 pct, ¼ w	A
R20	RESISTOR, 47K, 10 pct, ½ w	B
R21	RESISTOR, 100K, 5 pct, ¼ w	A
R21	RESISTOR, 160 K, 5%, ¼ w	B
R22	RESISTOR, 270 ohms, 10 pct, ½ w	A
R22	RESISTOR, 680 ohms, 5%, ¼ w	B
R23	RESISTOR, 47K, 10 pct, ½ w	A
R23	RESISTOR, 680 ohms, 5%, ¼ w	B
R24	RESISTOR, 1K, 10 pct, ¼ w	A
R24	RESISTOR, 160 K, 5%, ¼w	B

Table 5. Repair Parts
(continued)

REF DES	DESCRIPTION	USABLE ON CODE
R25	RESISTOR, 100K, 10 pct, ¼ w	A
R25	RESISTOR, 100K, 5 pct, ¼ w	B
R26	RESISTOR, 1K, 10 pct, ¼ w	A
R26	RESISTOR, 100K, 10 pct, ¼ w	B
R27	RESISTOR, 1K, 10 pct, ¼ w	A
R27	RESISTOR, 100K, 10 pct, ¼ w	B
R28	RESISTOR, 47K, 10 pct, ¼ w	A
R28	RESISTOR, 100K, 5 pct, ¼ w	B
R29	RESISTOR, 1K, 10 pct, ¼ w	A
R29	RESISTOR, 270 ohms, 10 pct, 1/2 w	B
R30	RESISTOR, 1.5K, 10 pct, 1/2 w	A
R30	RESISTOR, 1 megohm, 10 pct, ¼ w	B
R31	RESISTOR, 1 megohm, 10 pct, ¼ w	A
R31	RESISTOR, 1 megohm, 10 pct, ¼ w	B
R32	RESISTOR, 1 megohm, 10 pct, ¼ w	A
R32	RESISTOR, 680 ohms, 10 pct, ¼ w	B
R33	RESISTOR, 47K, 10 pct, ¼ w	B
R34	RESISTOR, 1K, 10 pct, ¼ w	B
R35	RESISTOR, 100K, 10 pct, ¼ w	B
R36 through R38	RESISTOR, 1K, 10 pct, ¼ w	B
R39	RESISTOR, 1.5K 10 pct, ½ w	B
R40	RESISTOR, 47K, 10 pct, ¼ w	B
RA and RB	RESISTOR, 150 ohms, 10 pct, ¼ w	
----	TUBE SOCKET, 7-pin miniature (EBY Part No. PC-7PN)	

Table 5. Repair Parts (continued)

REF DES	DESCRIPTION	USABLE ON CODE
A2	AUDIO AND SENSOR PCB (Part No. 95-0288/62-0096	
C1,C2,C3,C4, C7,C10,C14,C17, C25,C28,C30,C31, C36 and C37	CAPACITOR, Disc, 47 pf	
C6,C32, and C33	CAPACITOR, Mylar, .0022/100v	
C8	CAPACITOR, Electrolytic, 1 mf/50v	
C15,C16,C24, C29,C39,C122, C131,C132, and C133	CAPACITOR, Disc, .01/100v	
C129	CAPACITOR, Disc, NORM, = .01/100v 8KHZ = .005/100v	
C13	CAPACITOR, Disc, .1/10v	
C20	CAPACITOR, Electrolytic, 2 mf/25v	
C21	CAPACITOR, Electrolytic, 200 mf, 25 vdc	
C22	CAPACITOR, Disc, 0.001 mf	
C23	CAPACITOR, Mylar, .22 mf/75v	
C26	CAPACITOR, Disc, 120 pf/1000v	
C27	CAPACITOR, Disc, 470 pf/1000v	
C34 and C35	CAPACITOR, Mylar, .056/100v	
C38	CAPACITOR, Disc, 750 pf/1000v	
C40	CAPACITOR, Electrolytic, 10 mf/25v	
C41,C43 and C44	CAPACITOR, Electrolytic, 100 mf/15v	
C42	CAPACITOR, Disc, .2/10v	
C123	CAPACITOR, Tant, 4.7 mf/35v	
C128	CAPACITOR, Electrolytic, 10 mf/50v	

Table 5. Repair Parts
(continued)

REF DES	DESCRIPTION	USABLE ON CODE
C130	CAPACITOR, Electrolytic, 100 mf/25v	
DC1	DATA CELL (Sigma Part No. 301R1-24)	
IC1 through 4	INTEGRATED CIRCUIT (Fairchild Part No. U6E7739393)	
K1	RELAY (Potter and Brumfield Part No. R40-E3-Y4-V800)	
K5	RELAY (Potter and Brumfield Part No. R40-E3-Y4-V800)	
Q1 through Q3	TRANSISTOR (Part No. 2N3704)	
Q4	TRANSISTOR (Part No. MJE 3055)	
Q5	TRANSISTOR (Part No. MJE 2955)	
Q6,Q7, and Q8	TRANSISTOR (Part No. 2N3704)	
R1,R11,R18 R26,R50, and R52	RESISTOR, 10K, 5%, 1/4W	
R2,R8,R9,R13, R17,R27,R29, and R48	RESISTOR, 4.7K, 5%, 1/4W	
R3,R14, and R36	RESISTOR, 1 Meg, 5%, 1/4W	
R5	RESISTOR, 33K, 5%, 1/4W	
R6,R12,R15, R31,R34,R42, R43,R44,R46, and R47	RESISTOR, 1K, 10%, 1/4W	
R7	POTENTIOMETER, 1K	
R16 and R32	POTENTIOMETER, 5K	
R10	RESISTOR, 30K, 5%, 1/4W	
R28	RESISTOR, 330 ohm, 10% 1/4W	
R35 and R40	RESISTOR, 100K, 5%, 1/4W	
R19	RESISTOR, 10K, 10 pct, 1/4W	
R20	RESISOTR, 1K, 10 pct, 1/4W	

Table 5. Repair Parts
(continued)

REF DES	DESCRIPTION	USABLE ON CODE
R21	RESISTOR, 3.9K, 10 pct, 1/4W	
R22	RESISTOR, 330 ohms, 10 pct, 1/4W	
R23	RESISTOR, 33k, 10 pct, 1/4W	
R24	RESISTOR, 270 ohms, 10 pct, 1/2W	
R25	RESISTOR, 100K, 10 pct, 1/4W	
R27	RESISTOR, 4.7K, 10 pct, 1/4W	
R30	RESISTOR, 2.2K, 5%, 1/4W	
R33	RESISTOR, 6.8K, 5%, 1/4W	
R37	RESISTOR, 750K, 5%, 1/4W	
R38	RESISTOR, 360K, 5%, 1/4W	
R39	RESISTOR, 390K, 5%, 1/4W	
R41	RESISTOR, 820K, 5%, 1/4W	
R45	RESISTOR, 39K, 5%, 1/4W	
R49	RESISTOR, 30K, 5%, 1/4W	
R51	RESISTOR, 22K, 5%, 1/4W	
D1,D2,D6, D10, and D11	DIODE (Part No. TS1 or equivalent)	
Q4	TRANSISTOR (Part No. MJE 3055)	
Q5	TRANSISTOR (Part No. MJE 2955)	
Q6,Q7, and Q8	TRANSISTOR (Part No. 2N3704)	
T4 and T5	TRANSFORMER (Torotel Part No. 20954-1)	

Table 5. Repair Parts
(continued)

REF DES	DESCRIPTION	USABLE ON CODE
A6	REGULATOR PCB (Part No. 85x-0370/62-0094)	
BR1 through BR3	BRIDGE RECTIFIER (Motorola Part No. MDA970-2)	
C1	CAPACITOR, Disc, 0.001 mf	
C2	CAPACITOR, Electrolytic, 5600 mf, 15 vdc	
C3	CAPACITOR, Electrolytic, 200 mf, 6 vdc	
C4	CAPACITOR, Disc, 0.2 mf, 10 vdc	
C5	CAPACITOR, Disc, 0.001 mf	
C6	CAPACITOR, Electrolytic, 5000 mf, 50 vdc	
C7	CAPACITOR, Electrolytic, 200 mf, 6 vdc	
C8	CAPACITOR, Electrolytic, 25 mf, 50 vdc	
C9	CAPACITOR, Disc, 0.001 mf	
C10	CAPACITOR, Electrolytic, 3000 mf, 25 vdc	
C11	CAPACITOR, Electrolytic, 200 mf, 6 vdc	
C12	CAPACITOR, Disc, 0.01 mf	
C13	CAPACITOR, Electrolytic, 3000 mf, 25 vdc	
C14	CAPACITOR, Electrolytic, 200 mf, 6 vdc	
C15	CAPACITOR, Disc, 0.01 mf	
C16	CAPACITOR, Electrolytic, 250 mf, 50 vdc	
C17	CAPACITOR, Electrolytic, 50 mf, 6 vdc	
C18	CAPACITOR, Electrolytic, 1 mf, 50 vdc	
C19	CAPACITOR, Disc, 0.01 mf	
C20	CAPACITOR, Electrolytic, 1 mf, 50 vdc	
C21	CAPACITOR, Disc, 0.01 mf	

Table 5. Repair Parts
(continued)

REF DES	DESCRIPTION	USABLE ON CODE
C22	CAPACITOR, Electrolytic, 10 mf, 25 vdc	
C23	CAPACITOR, Electrolytic, 1000 mf, 6 vdc	
C24 through C27	CAPACITOR, Electrolytic, 1 mf, 50 vdc	
C28	CAPACITOR, Electrolytic, 2 mf, 50 vdc	
C29	CAPACITOR, Electrolytic, 1 mf, 50 vdc	
C30	CAPACITOR, Electrolytic, 25 mf, 50 vdc	
D1 through D5, D7 through D18	DIODE (Part No. 1N645 or equivalent)	
D6	DIODE (Part No. 1N4746A or equivalent)	
D19	DIODE (Part No. 1N270)	
K2 through K4	RELAY (Potter and Brumfield Part No. R40-E3-Y4-V800)	
Q1	TRANSISTOR (Part No. 2N3702)	
Q2	TRANSISTOR (Part No. MJE3055)	
Q3 and Q4	TRANSISTOR (Part No. 2N3704)	
Q5	TRANSISTOR (Part No. 2N3702)	
Q6	TRANSISTOR (Part No. 2N3055)	
Q7	TRANSISTOR (Part No. 2N3053)	
Q8	TRANSISTOR (Part No. 2N3704)	
Q9	TRANSISTOR (Part No. 2N3702)	
Q10	TRANSISTOR (Part No. MJE3055)	
Q11 through Q13	TRANSISTOR (Part No. 2N3704)	
Q14	TRANSISTOR (Part No. MJE2955)	
Q15 and Q16	TRANSISTOR (Part No. 2N3702)	
Q17	TRANSISTOR (Part No. 2N3704)	
Q18	TRANSISTOR (Part No. MJE3055)	
Q19 and Q20	TRANSISTOR (Part No. 2N3704)	
R1	RESISTOR, 47 ohms, 10 pct, 1/2W	

Table 5. Repair Parts (continued)

REF DES	DESCRIPTION	USABLE ON CODE
R2	RESISTOR, 1K, 10 pct, 1/2W	
R3	RESISTOR, 2.2K, 10 pct, 1/2W	
R4	RESISTOR, 6.8K, 10 pct, 1/2W	
R5	RESISTOR, 2.7K, 10 pct, 1/2W	
R6	RESISTOR, 47 ohms, 10 pct, 1/2W	
R7	RESISTOR, 1K, 10 pct, 2 W, WW	
R8	RESISTOR, 2.7K, 10 pct, 1/2W	
R9	RESISTOR, 9.1K, 10 pct, 1/2W	
R10	RESISTOR, 47 ohms, 10 pct, 1/2WW	
R11 through R13	RESISTOR, 1K, 10 pct, 1/2W	
R14	POTENTIOMETER, 5K	
R15	RESISTOR, 1K, 10 pct, 1/2W	
R16	RESISTOR, 47 ohms, 10 pct, 1/2W	
R17	RESISTOR, 1K, 10 pct, 1/2W	
R18	POTENTIOMETER, 5K	
R19	RESISTOR, 1K, 10 pct, 1/2W	
R20	RESISTOR, 2.2K, 10 pct, 1/2W	
R21	RESISTOR, 270 ohms, 10 pct, 1/2W	
R22	RESISTOR, 27 ohms, 10 pct, 1W	
R23	RESISTOR, 1K, 10 pct, 1/2W	
R24	RESISTOR, 270 ohms, 10 pct, 1/2W	
R25	RESISTOR, 4.7K, 10 pct, 1/2W	
R26	RESISTOR, 47 ohms, 10 pct, 1/2W	
R27	RESISTOR, 1K, 10 pct, 1/2W	
R28	RESISTOR, 47 ohms, 10 pct, 1/2W	
R29	RESISTOR, 1K, 10 pct, 1/2W	

Table 5. Repair Parts (continued)

REF DES	DESCRIPTION	USABLE ON CODE
R30	RESISTOR, 4.7 ohms, 10 pct, 2W	
R31	RESISTOR, 5.6K, 10 pct, 1/2W	
R32	RESISTOR, 4.7K, 10 pct, 1/2W	
R33	RESISTOR, 47 ohms, 10 pct, 1 W	
R34	RESISTOR, 1.5K, 1/2W, 10%	
----	HEATSINK (Wakefield Part No. NC603K)	
----	HEATSINK 205 BC	
----	HEATSINK TM 6001 B	

Table 5. Repair Parts
(continued)

REF DES	DESCRIPTION	USABLE ON CODE
	CHASSIS MOUNTED COMPONENTS	
F1	FUSE, 2 Amp slo-blo (Part No. MD12)	
K1	STEPPER SWITCH (Clare Part No. 262423)	
P1, P3, P5 and P7	CONNECTOR (Winchester Part No. HW50D2111)	
P2 and P6	CONNECTOR (Winchester Part No. HW31D2111)	
P8	CONNECTOR (Elco Part No. 00-8016-020-000-707)	
P9 and P10	CONNECTOR (Elco Part No. 00-8016-056-000-707)	
P11	CONNECTOR (Elco Part No. 00-8016-090-000-707)	
S7	SWITCH (Alco Part No. 205N)	
T1	TRANSFORMER (Central Transformer Co. Part No. N38-101)	
TB1 and TB2	TERMINAL STRIP, 6 Terminal	
TB5	TERMINAL STRIP (Cinch Jones Part No. Y140-6)	
	PANEL MOUNTED COMPONENTS	
I1 through I48	INDICATOR LIGHT (Dialco Part No. 507-3917-1471-600RED)	
S1	SWITCH (Clare-Pendar Part No. 1160)	
S2 through S5 and S8	SWITCH (Clare-Pendar Part No. 1018)	
S6	SWITCH (Clare-Pendar Part No. 1022)	

Table 5. Repair Parts

INSTACART SPARE PARTS LIST
LIGHT SUPPORT

Quantity TO	ST	Description	IGM Part #	Selling Price Each.	Ext.
3	3	IC, SP380 Quad Nor Bus Rec Sig.	3130-0038-06		
3	3	IC, UA739 Dual Audio Pre Fairchl	3140-0073-94		
2	2	Lamp, BI-Pin 1471-600 28V Dialco	3901-1471-03		
1	1	Relay, R40-E3-Y4-V800 Slimline	4504-4024-25		
3		Datacell 301-R1-24 24V 40MA Sig.	4507-3024-29		
	3	Datacell 301-R2-24-24V 40MA Sig.	4507-3224-29		
1	1	Rectifier Bridge MDA970-2 Mtrola	4804-0970-23		
3	3	Diode TS-1 SI200 PIIV .75A	4805-0001-08		
3	3	Diode IN270 GE200 PIV .2A ABIS	4806-0270-00		
1	1	Transistor MJE2955 NPN Motorola	4811-2955-03		
2	2	Transistor MJE3055 NPN Motorola	4811-3055-03		
3	3	Transistor 2N3702 Gen Dur PNP AB	4818-3702-00		
3	3	Transistor 2N2222 RF NPN AB	4819-2222-00		
3	3	Transistor 2N3704 Gen Pur NPN AB	4819-3704-00		
5	5	Fuse 2A STD Littlefuse Slo-Blow	5101-0206-21		
1	1	Instacart Head Alignment	6262-0030-10		
1	1	Instacart Screwdriver	6262-0305-00		
1	1	Instacart Drawer Assembly	6362-0203-00		

Mono:

Stereo:

INSTACART 48 TRAY

Spare Parts List
Heavy Support

Quantity Mono	Quantity ST	Description	IGM Part #	Selling Price Each	Ext.
2	2	Connector Socket Eby	2105-2071-43		
3	3	IC SP380 Quad NOR Bus Rec Sig.	3130-0038-06		
6	6	IC UA739 DUal Audio Pre Fairchl	3140-0073-94		
1	1	Motor Beau 40H-81 Instacart	3501-4081-07		
2	2	Lamp, Bi-Pin 1471-600 28V Dialco	3901-1471-03		
1	1	Relay, R40-E3-Y4-V800 Slimline	4504-4024-25		
3		Datacell, 301-R1-24-24V 40 MA Sig	4507-3024-29		
	3	Datacell 301-R2-24-24V 40MA Sig.	4507-3224-29		
1	1	Relay Stepper Switch 26-2423 Clare	4509-2423-01		
1	1	Rectifier Bridge MDA970-2 Mtrola	4804-0970-23		
	3	Diode TS-1 SI 200 PIIV. 75A	4805-0001-08		
3	3	Diode IN270 GE200 PIV .2A ABIS	4806-0270-00		
1	1	Transistor MJE2955 NPN Mtrola	4811-2955-03		
2	2	Transistor MJE3055 NPN Mtrola	4811-3055-03		
3	3	Transistor 2N3702 Gen Dur NPN AB	4818-3702-00		
3	3	Transistor 2N2222 RF NPN AB	4819-2222-00		
6	6	Transistor 2N3704 Gen Pur NPN AB	4819-3704-00		
5	5	Fuse 2A Std Littlefuse Slo-blow	5101-0206-21		
1	1	Switch Push But 2P2T 1018 Pendar	5104-1018-01		
1	1	SW Push BUt 6P2T 1022 pendar	5104-1022-01		
1	1	Switch Push 6P2T 5221-22-01	5104-2213-01		

Instacart 48 Tray

Quantity No	ST	Description	IGM Part #	Selling Price Each	Ext
1	1	Transformer Power Inst. N38-102 Nlake	5607-3810-24		
1	1	Instacart Drawer Assembly	6362-0203-00		
2		Instcrt head housing mono	6362-0204-25		
	2	Instcrt Head Housing Stereo	6362-0204-26		
1	1	Instacart Regulator Board	6385-0370-21		
1		Instcrt Main Audio PCB Mono	6385-0495-35		
	1	Instcrt Main Audio PCB Stereo	6385-0538-16		
1		Instcrt Audio & Sensor Mono Bd.	6395-0288-75		
	1	Instcrt Audio & Sensor Stereo Bd.	6395-0288-76		

Mono :
Stereo :

CAUTION

When removing or inserting circuit boards, it is extremely important that all power to the system be turned off. Those systems having battery back-up power should also have the battery switch turned off. Failure to turn off power to the system when handling circuit boards may cause severe damage to the equipment.

WARRANTY

IGM/NTI (Seller) warrants that every piece of equipment sold shall be free from defects in materials and workmanship under normal use and service for a period of one year after the date of shipment to the buyer. This warranty is limited, however, to the following:

The repair, or at Sellers option, the replacement of any part of the equipment that, upon examination, is disclosed to the satisfaction of Seller to have been defective at the time of delivery, or that becomes defective during the warranty period. Seller will, without charge, either repair the defective part or replace it with a new or reconditioned part.

WARRANTY EXCLUSION

This warranty does not cover (A) items normally considered consumable, such as lamps, fuses, magnetic tape. Magnetic tape heads are warranted for a period of sixty (60) days from the date of shipment, (B) defects, damage or deterioration due to normal use, wear, tear or exposure, (C) normal maintenance services, (D) damage or defects due to misuse, abuse, alterations, negligence, or accident, (E) damage or defect due to repair of the equipment by someone other than Seller, and (F) any part or component which was manufactured by someone other than Seller. Seller shall not be liable for any consequential damages, including down-time, to the buyer while the equipment is out of commission, nor does this warranty cover removal and reinstallation expense. This warranty shall become void unless Seller is notified in writing of any alleged defect in the material or workmanship within seven (7) calendar days of the date upon which the defect was discovered, or should have been discovered. The buyer is responsible for performance of regular maintenance service, and THIS WARRANTY IS IN LIEU OF ALL OTHER IGM/NTI WARRANTIES, EXPRESS OR IMPLIED, INCLUDING ANY IMPLIED WARRANTY OF MERCHANTABILITY, OR IMPLIED WARRANTY OF FITNESS FOR ANY PARTICULAR PURPOSE. SELLER DOES NOT ASSUME OR AUTHORIZE ANY PERSON OR ASSUME ON ITS BEHALF, ANY OTHER OBLIGATION OR LIABILITY.

IGM/NTI INSTALLATION

SYSTEMS SELLING IN EXCESS OF $21,000.00

IGM systems selling in excess of $21,000.00 include on-site installation and staff training at no additional cost. IGM/NTI provides personnel to insure proper installation, checkout, and operation of the system, and offers on-site instruction to appropriate members of the customer's staff.

POST INSTALLATION EQUIPMENT ORDERS

Any additional equipment ordered or installed after completion of the initial installation shall not be considered part of the original installation and shall be installed by the customer. Should IGM/NTI assistance be required for supplementary installation, it shall be charged as outlined in Schedule A, attached.

SYSTEMS SELLING FOR LESS THAN $21,000.00

IGM/NTI systems selling for under $21,000.00 do not include IGM/NTI supplied installation and training. These systems are generally quite simple to install and any reasonably qualified technician can handle such installation. In the event that the customer desires IGM/NTI installation of the system, charges for the service are outlined in Schedule A, attached.

CUSTOMER PREPARATION

The customer must prepare for the installation by following the pre-installation manual for the equipment that he has purchased, and by supplying proper grounding, AC power, air conditioning as necessary, and audio and remote control wiring.

SCHEDULE A

Installation and Service calls that are not covered in the system selling price or under the IGM warranty, will be charged to the customer on the following basis:

A flat charge of $150.00 per 8-hour day or partial day, while the Customer Service technician is at the customer's station, plus all related travel and lodging expenses.

IGM/NTI SERVICE

24 HOUR CUSTOMER SERVICE

Customer Service technicians are available by telephone on a round-the-clock basis to assist customers with technical problems. No charge will be made for the technician's time as long as the station technician is knowledgeable in broadcast electronics, has a basic knowledge of the technical difficulty, has the necessary schematics, and has thoroughly studied the operations and maintenance manuals.

SERVICE TO NON-TECHNICAL STATION PERSONNEL

IGM technician time spent with non-technical persons or persons unprepared as described above, will be charged at the rate of $25.00 per hour or fraction thereof.

FACTORY SERVICE

Return of defective units, modules, or components, prepaid, for factory service, or trade of such items for new items, normally makes additional service calls after installation unnecessary.

ADDITIONAL SERVICE CALLS IF NECESSARY

If necessary, service calls during the warranty period shall be made by IGM/NTI at no charge to the customer to insure the proper operation of the equipment or system. The modular design of IGN/NTI equipment makes it relatively easy to isolate defective units, modules, or components by telephone.

IGM/NTI RIGHT TO CHARGE FOR SERVICE CALLS

IGM/NTI reserves the right while the warranty is still in force, to charge the customer for service calls. These cases will be determined on an individual basis after a report has been filed by the service engineer. If, in IGM/NTI's opinion, the service call was not justified, capricious, or user-caused, a charge will be made to the station equal to that made if the call had been made outside the warranty period.

NOTE: For complete warranty information, see the reverse side of IGM/NTI's "Offer to Purchase".

REPAIR OF ITEMS

Individual items or components will be repaired at the IGM/NTI plant at no charge within the warranty period if the customer returns these items prepaid. Items beyond the warranty period, or that have been mishandled, damaged or abused by the customer during the warranty period, will be repaired at the current shop rate with a minimum charge of $50.00.

MODIFICATIONS

The IGM/NTI Engineering Department will be pleased to quote prices on non-standard modifications requested by the customer. The modifications may be performed:

(a) in the field by the customer
(b) in the field by our Customer Service technician
(c) at the IGN/NTI plant

The Engineering quote will reflect all three prices.

WARRANTY AND MODIFICATIONS

If equipment is in warranty, and providing that all modifications made, if done by the customer, conform to Engineering schematics as provided by IGM/NTI, the modification will not void the warranty. Modifications performed by the customer without IGM/NTI's specific approval shall void the warranty on the system.

IGM INSTACART

OPERATION AND MAINTENANCE MANUAL

6362-0001-00

Drawing number 95-0409 is included at the end of this manual for 24 cartridge model applications.

The material in this manual is for informational purposes and is subject to change without notice.

12/19/75

APPROVAL	DATE
DRAFT	
CHECK	
ENG.	
SERIAL #	

SHEET 1 OF 65 SCALE=

THE INFORMATION CONTAINED HEREIN IS PROPRIETARY AND IS NOT TO BE REPRODUCED OR RELEASED WITHOUT WRITTEN PERMISSION OF NTI/IGM.

IGM
A Division of NTI 4041 Home Road
Bellingham, Wa. 98225

TITLE: INSTACART OPERATION & MAINTENANCE MANUAL W/SCHEMATICS

SIZE	DWG. NO.	REV.
A	6362-0001	00

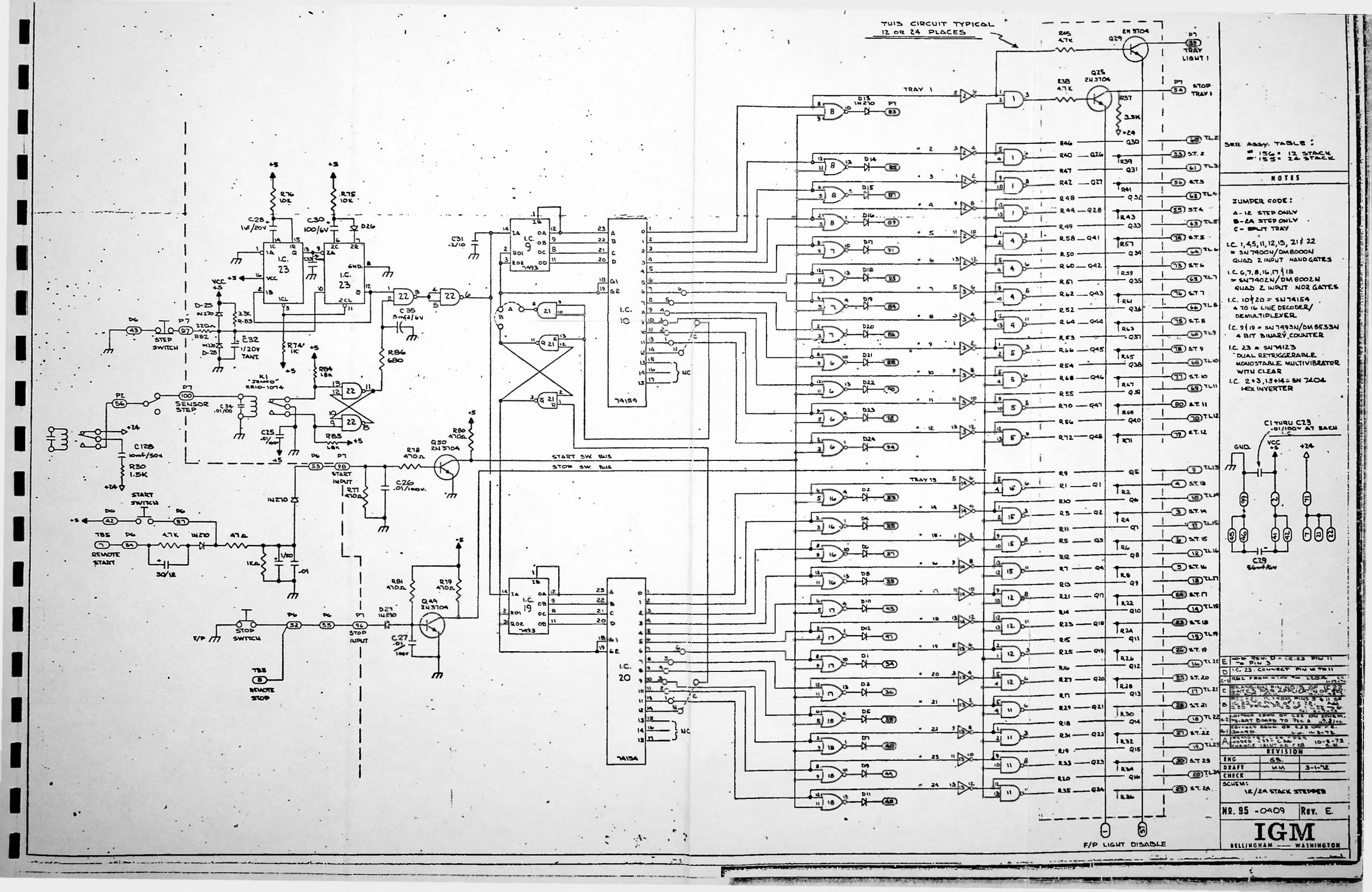
THIS CIRCUIT TYPICAL 12 OR 24 PLACES
STEP SWITCH
SENSOR STEP
START SWITCH
REMOTE START
STOP SWITCH
REMOTE STOP
START INPUT
STOP INPUT
START SW. BUS
STOP SW. BUS
TRAY 1
TRAY 13
TRAY LIGHT 1
STOP TRAY 1
F/P LIGHT DISABLE
I.C. 23
I.C. 9
I.C. 19
I.C. 10
I.C. 20
74154
7493
SEIL ASSY. TABLE:
= 156: 12 STACK
= 155: 24 STACK
NOTES
JUMPER CODE:
A - 12 STEP ONLY
B - 24 STEP ONLY
C - SPLIT TRAY
I.C. 1,4,5,11,12,15,21 & 22 = SN7400N/DM8000N QUAD 2 INPUT NAND GATES
I.C. 6,7,8,16,17 & 18 = SN7402N/DM8002N QUAD 2 INPUT NOR GATES
I.C. 10 & 20 = SN74154 4 TO 16 LINE DECODER/DEMULTIPLEXER
I.C. 9 & 19 = SN7493N/DM8553N 4 BIT BINARY COUNTER
I.C. 23 = SN74123 DUAL RETRIGGERABLE MONOSTABLE MULTIVIBRATOR WITH CLEAR
I.C. 2+3, 13+14 = SN 7404 HEX INVERTER
C1 THRU C23 .01/100V AT EACH I.C.
C29 50mf/6V
REVISION
ENG GB.
DRAFT MM 3-1-72
CHECK
SCHEM: 12/24 STACK STEPPER
NO. 95 -0409 Rev. E
IGM
BELLINGHAM —— WASHINGTON

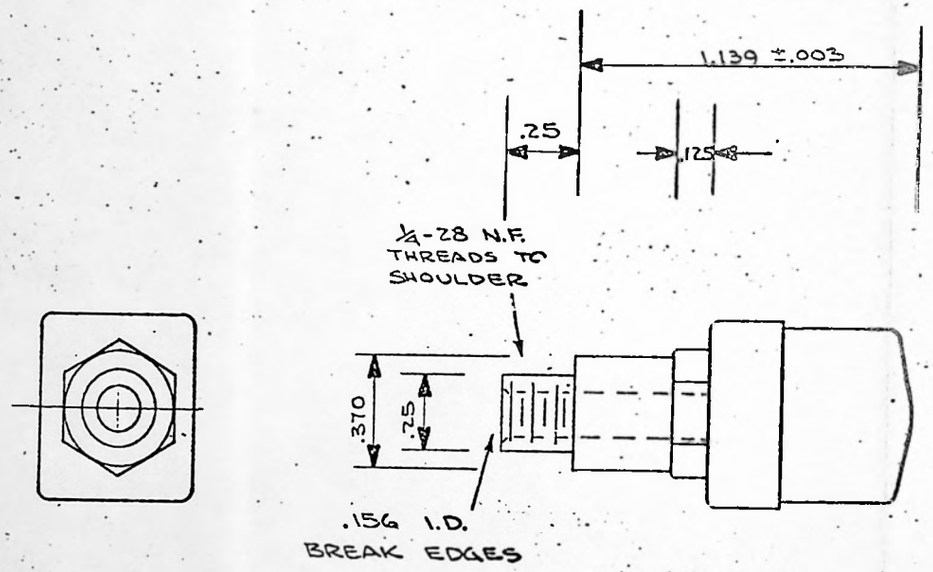

.375 HEXAGON BRASS

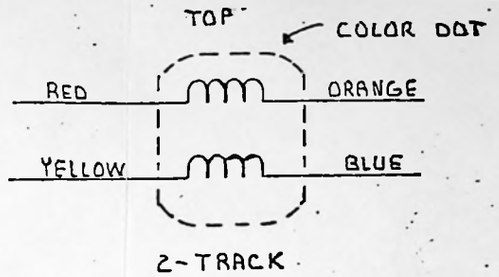

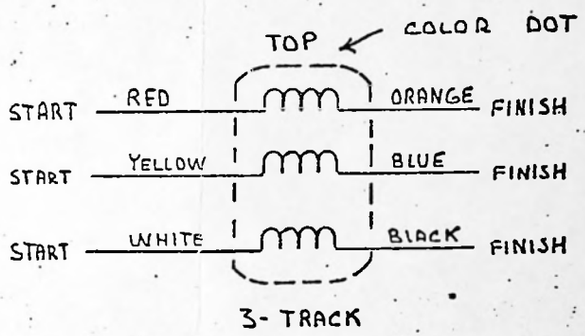

REV	DESCRIPTION	DATE
B	ADD COLOR CODE KS	8-1-75
A	ADJUST STUD LENGTH KS	6-26-75

APPROVAL	DATE
DRAFT KS	4-16-75
CHECK	
ENG.	
DIR.	
SHEET 1 OF 1 SCALE: 2X	

THE INFORMATION CONTAINED HEREIN IS PROPRIETARY AND IS NOT TO BE REPRODUCED OR RELEASED WITHOUT WRITTEN PERMISSION OF NUTRIGIL

NUTRIGIL
Bellingham Home Road
Bellingham Wa. 98225

TITLE: INSTACART HEAD MOUNT

SIZE	DWG. NO.	REV.
B	62-0076	B

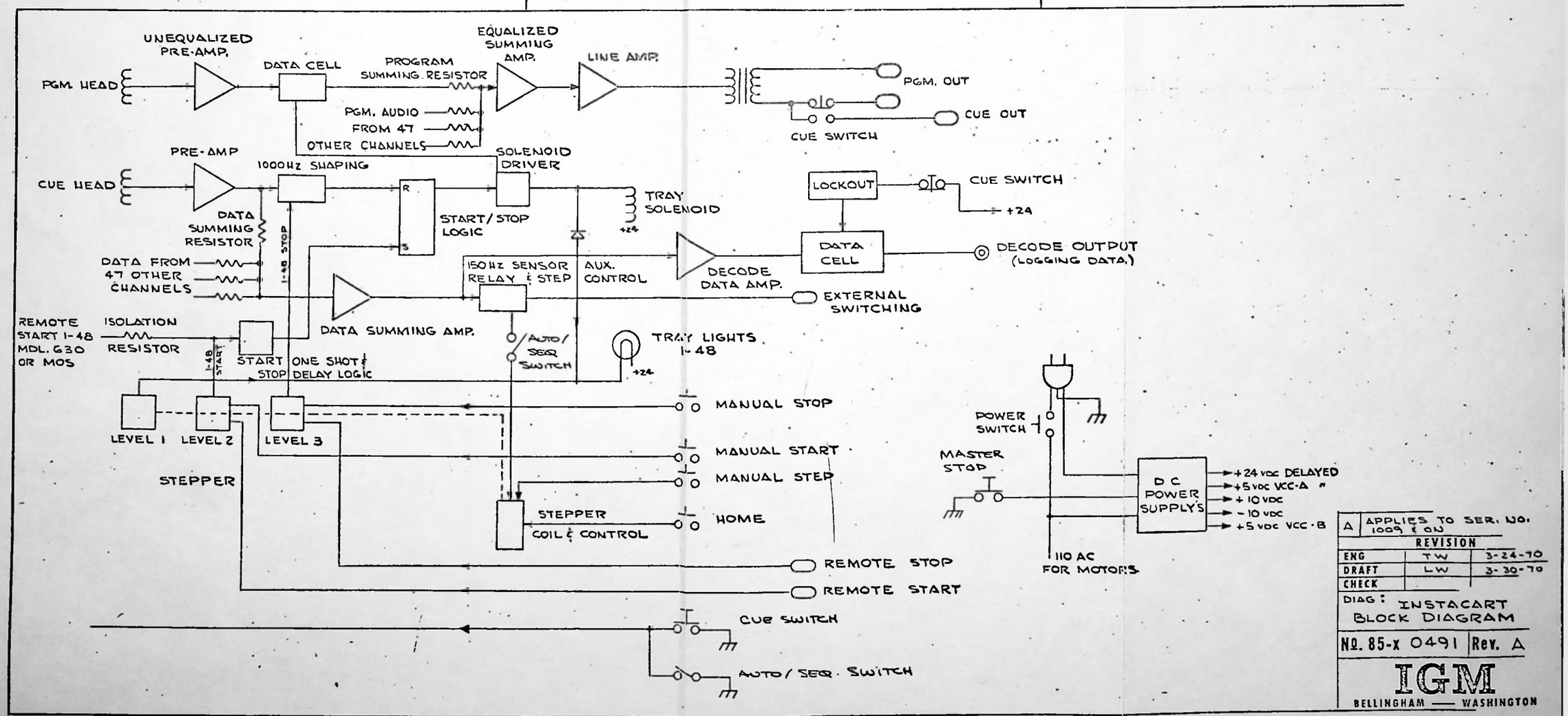
UNEQUALIZED PRE-AMP.
PGM. HEAD
DATA CELL
PROGRAM SUMMING RESISTOR
EQUALIZED SUMMING AMP.
LINE AMP.
PGM. OUT
CUE OUT
CUE SWITCH
PGM. AUDIO
FROM 47
OTHER CHANNELS
PRE-AMP
CUE HEAD
1000Hz SHAPING
SOLENOID DRIVER
TRAY SOLENOID
+24
START/STOP LOGIC
DATA SUMMING RESISTOR
1-48 STOP
DATA FROM 47 OTHER CHANNELS
150Hz SENSOR RELAY & STEP
AUX. CONTROL
DECODE DATA AMP.
LOCKOUT
CUE SWITCH
+24
DATA CELL
DECODE OUTPUT (LOGGING DATA)
EXTERNAL SWITCHING
DATA SUMMING AMP.
REMOTE START 1-48 MDL. 630 OR MOS
ISOLATION RESISTOR
1-48 START
START ONE SHOT & STOP DELAY LOGIC
AUTO/SEQ SWITCH
TRAY LIGHTS 1-48
+24
MANUAL STOP
MANUAL START
MANUAL STEP
HOME
LEVEL 1
LEVEL 2
LEVEL 3
STEPPER
STEPPER COIL & CONTROL
REMOTE STOP
REMOTE START
CUE SWITCH
AUTO/SEQ. SWITCH
POWER SWITCH
MASTER STOP
110 AC FOR MOTORS
D C POWER SUPPLY'S
+24 VDC DELAYED
+5 VDC VCC-A "
+10 VDC
-10 VDC
+5 VDC VCC-B
A APPLIES TO SER. NO. 1009 & ON
REVISION
ENG TW 3-24-70
DRAFT LW 3-30-70
CHECK
DIAG: INSTACART BLOCK DIAGRAM
NO. 85-X 0491 Rev. A
IGM
BELLINGHAM — WASHINGTON

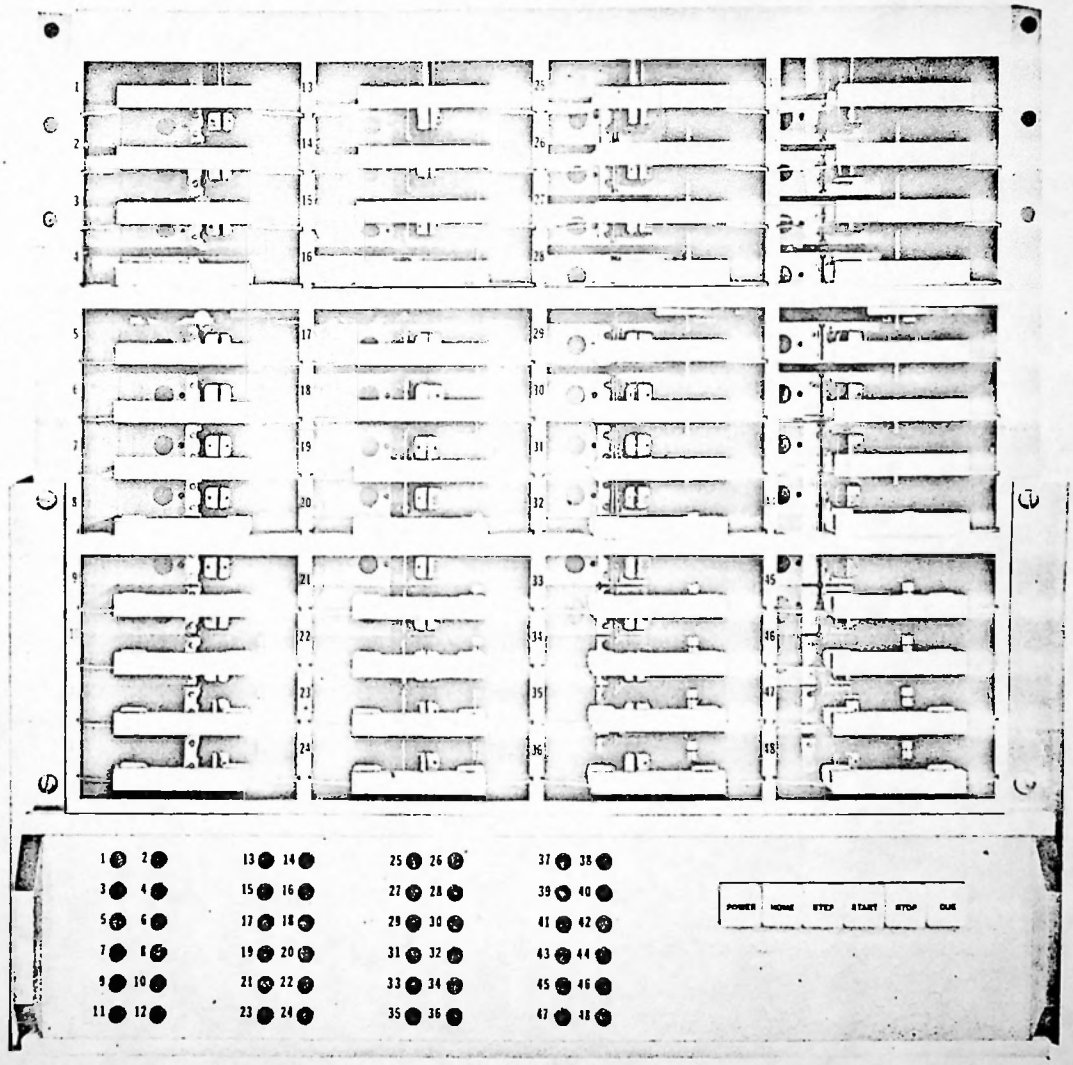

Fig. 2

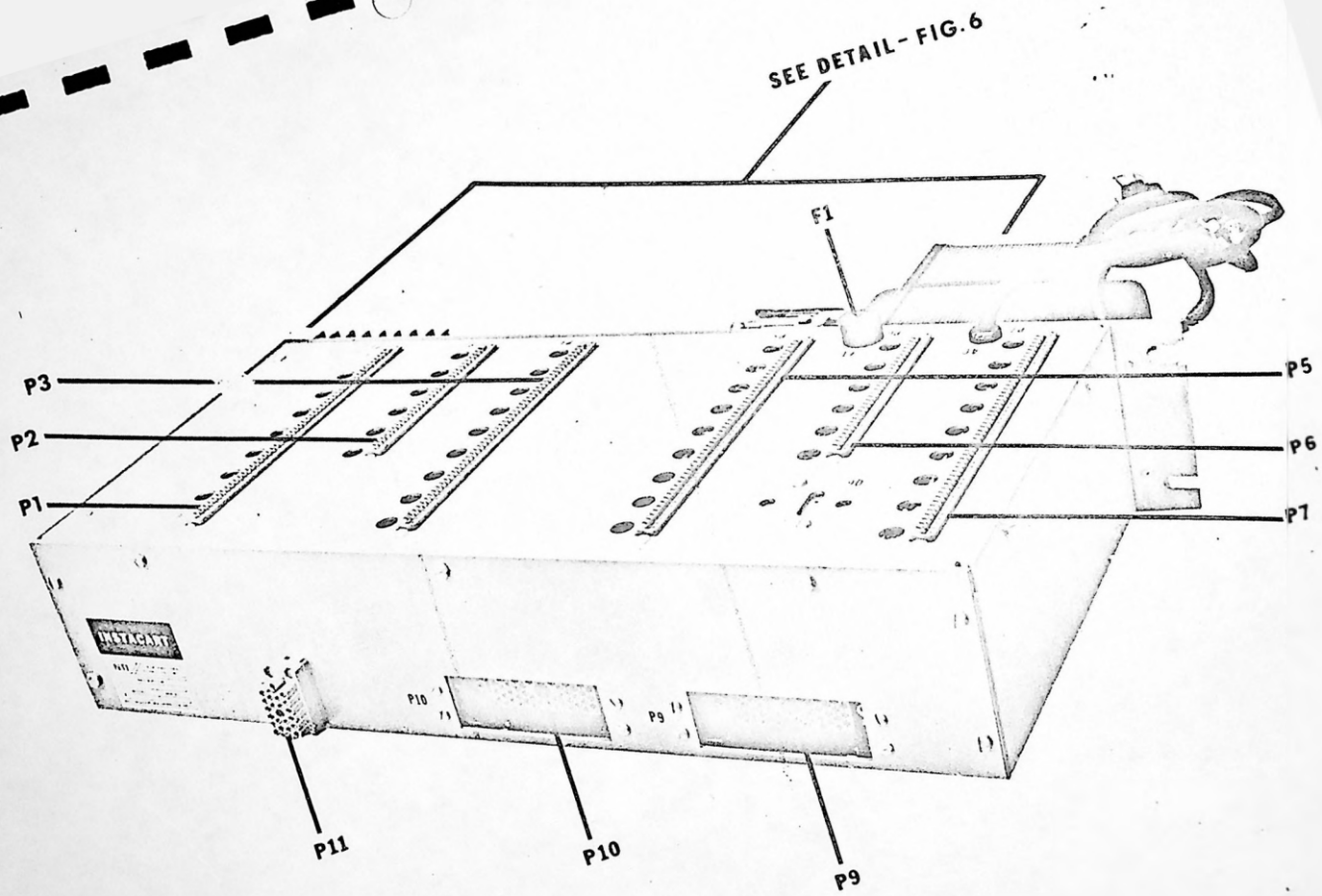

FIG. 3

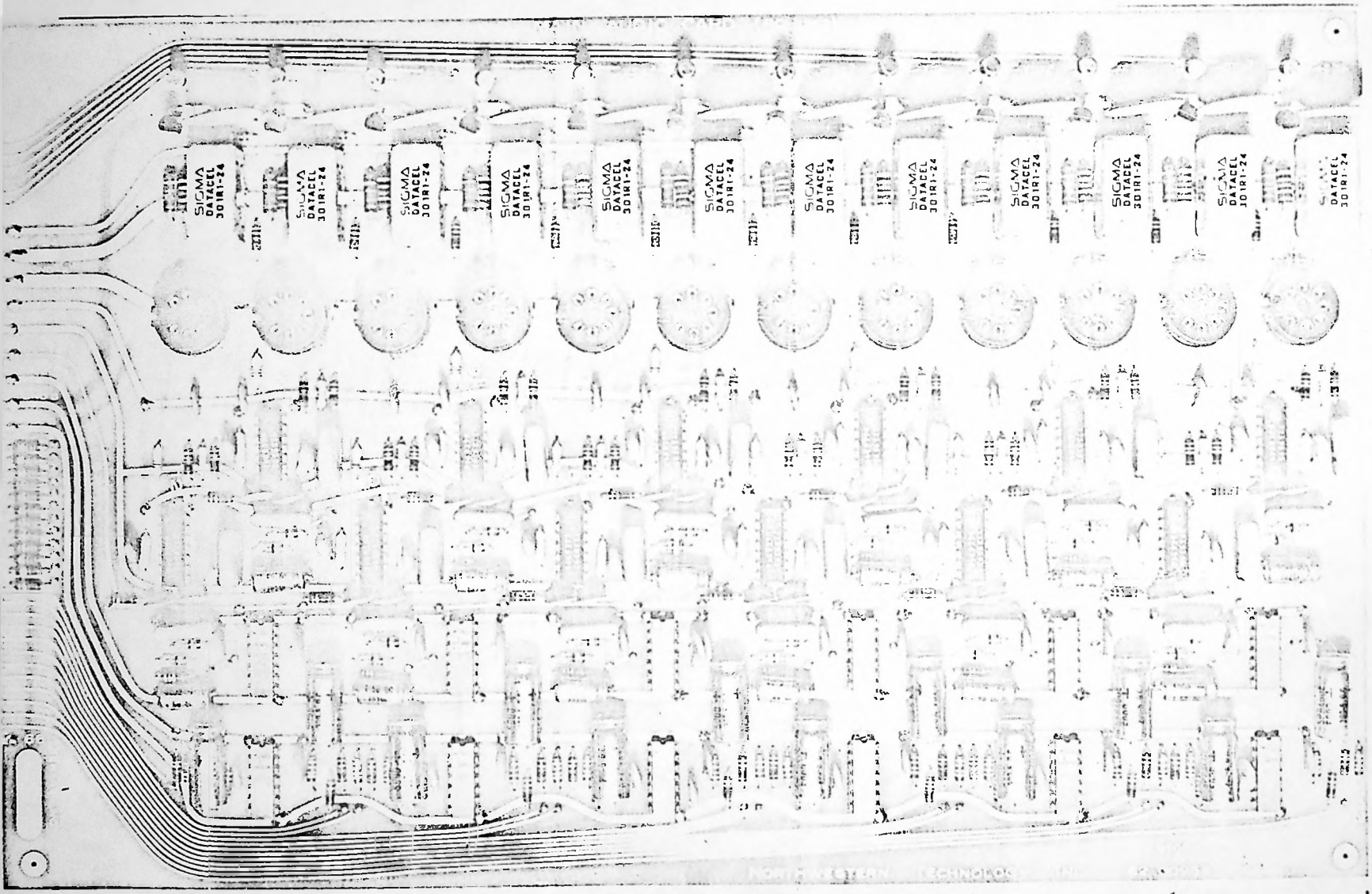

DETAIL
Fig.17

Mono Board
Fig. 4

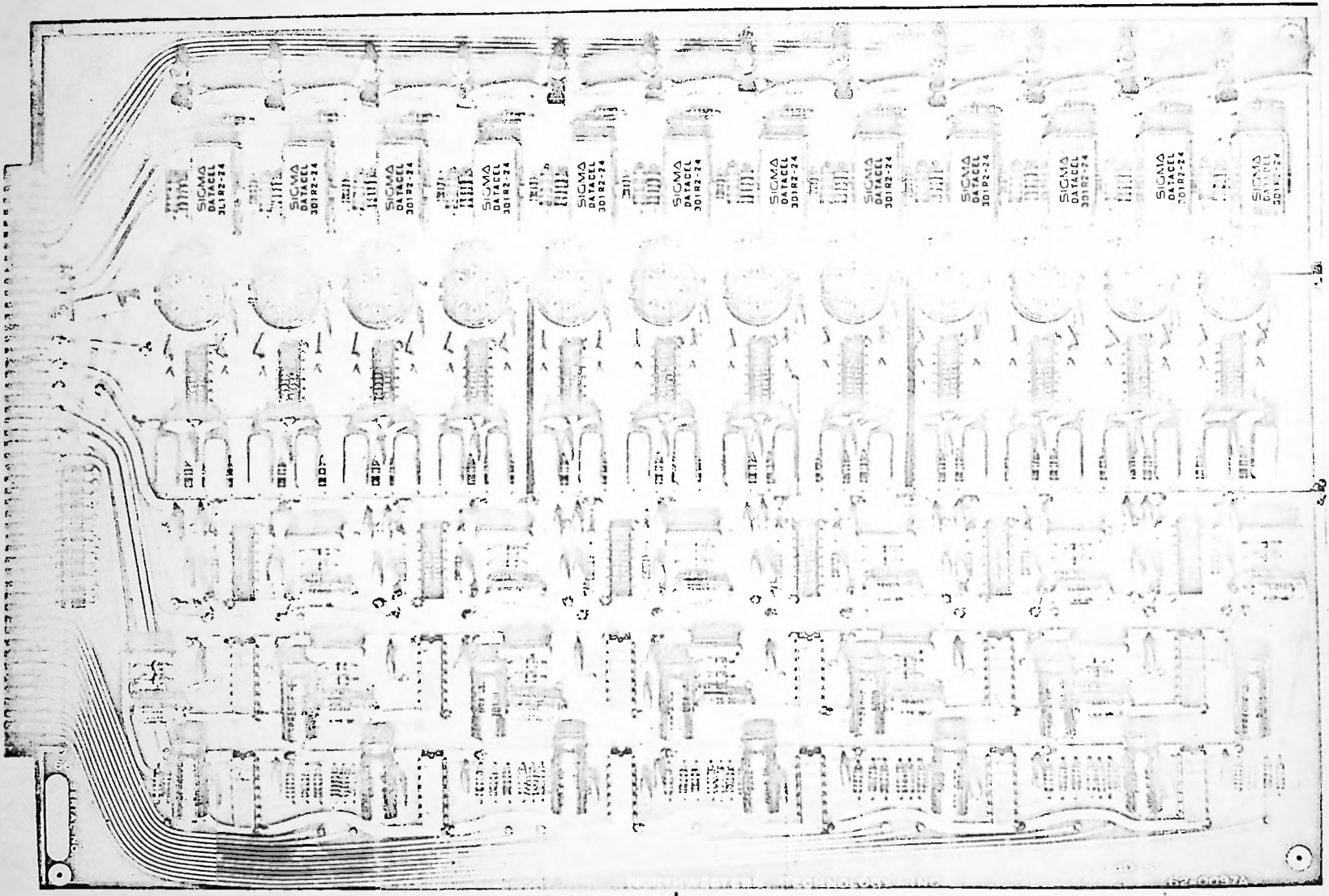

DETAIL
Fig. 18

Stereo Board
Fig. 5

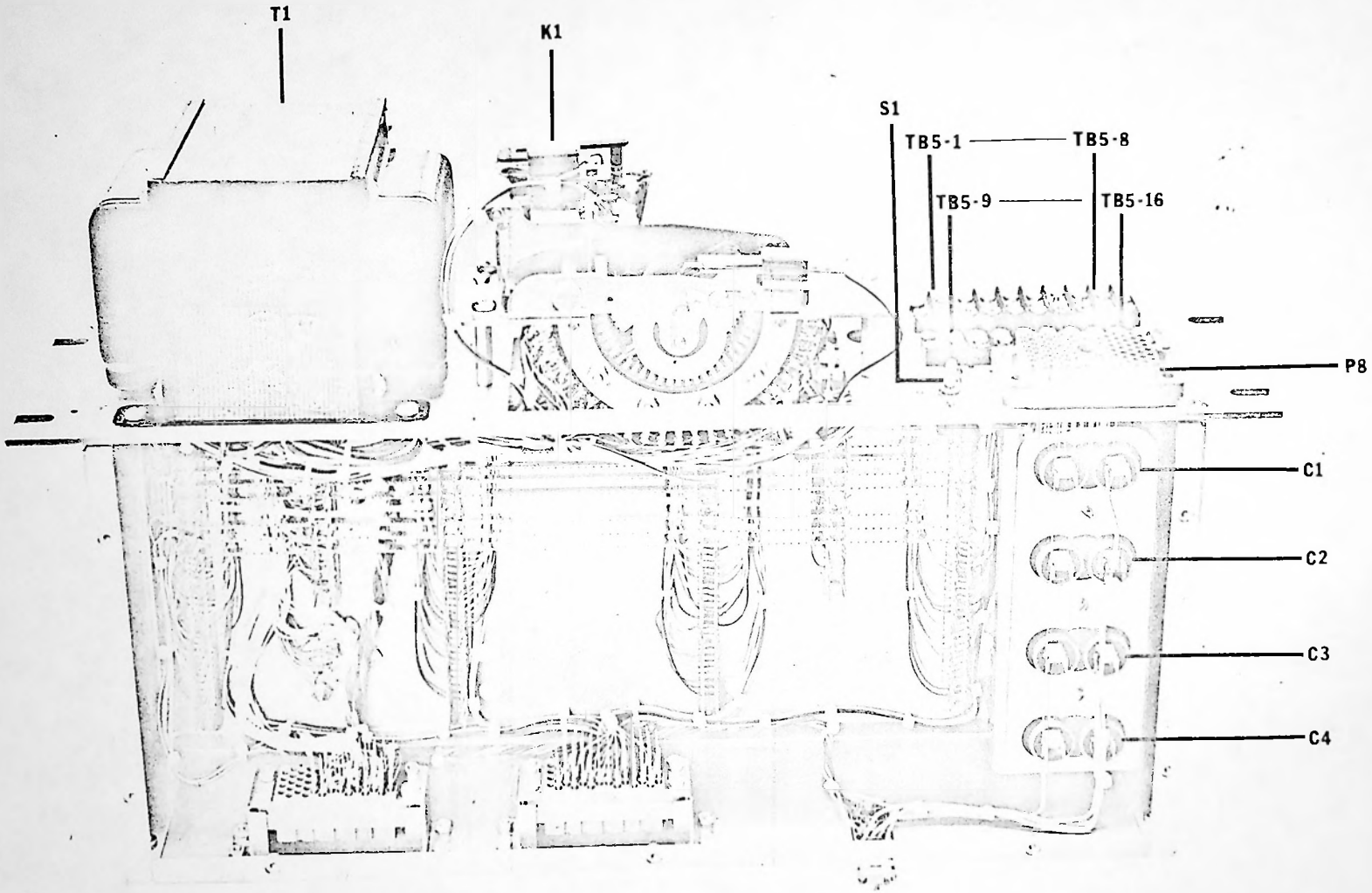

Fig. 6

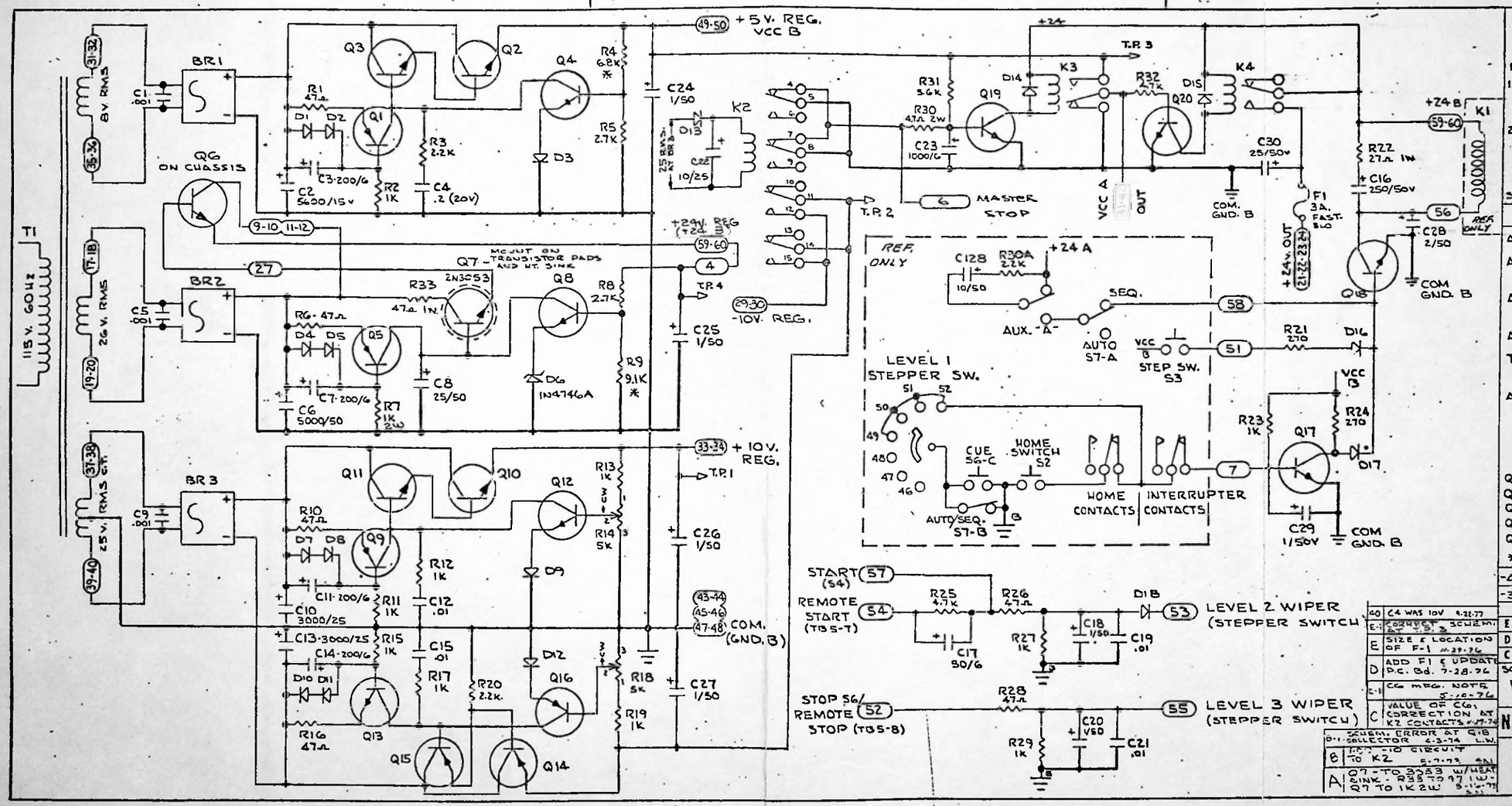

MFG. NOTE:

1. CABLE-TIE LARGER CAPACITORS C2-C6-C10 & C13, TO P.C. BOARD.
2. MOUNT Q7 ON TRANSISTOR PADS.

SEE ASSY. TABLE #1

NOTES

ALL DIODES = 1N645 or EQUIV. EXCEPT AS NOTED

ALL BRIDGES = MDA 970-2 (MOTOROLA) (BR1, 2, & 3)

ALL RESISTORS = ½ WATT/10% EXCEPT AS NOTED

ALL CAPACITOR VALUES IN uf

T1 = N38-101 (CENTRAL TRANSF. CO., CHICAGO, ILL.)

ALL RELAYS = * R40-E3-Y4-V800 24 VDC (AMF/POTTER & BRUMFIELD)

Q3, Q4, Q8, Q11, Q12, Q13, Q17, Q19, & Q20 = 2N3704

Q1, Q5, Q9, Q15, & Q16 = 2N3702

Q2, Q10, & Q18 = MJE 3055

Q6 = 2N3055 MTD. ON CHASSIS

Q14 = MJE 2955

Q7 = 2N3053 w/205BC HT. SINK

* NOMINAL RESISTOR VALUE

REVISION		
ENG	G. BIERY	5-13-70
DRAFT	L. W.	6-8-70
CHECK		

SCHEM: REGULATOR CARD (PC-6)

SER. NO. 1009 & ON

NO. 85-x 0370 Rev. 40

IGM BELLINGHAM — WASHINGTON

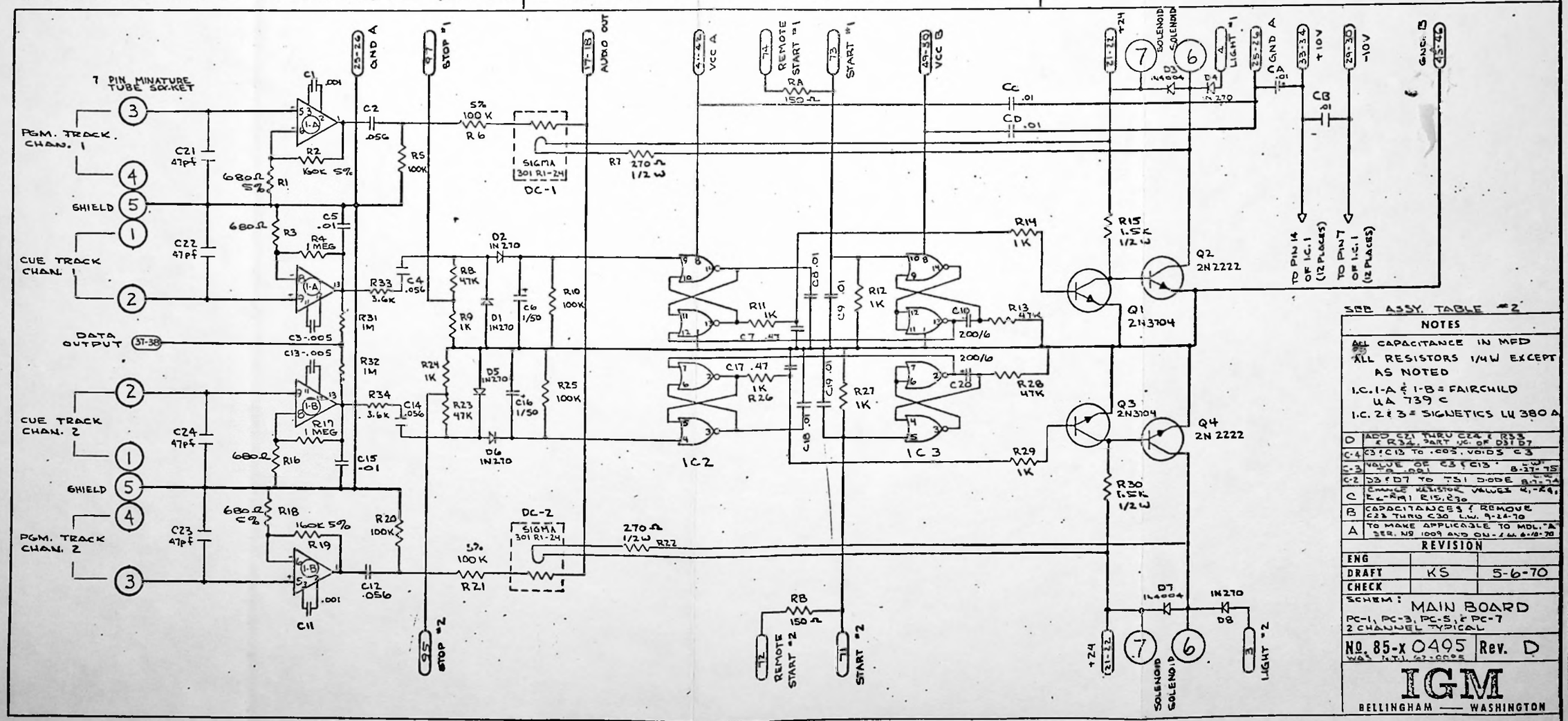
7 PIN MINATURE TUBE SOCKET
PGM. TRACK. CHAN. 1
SHIELD
CUE TRACK CHAN. 1
DATA OUTPUT
CUE TRACK CHAN. 2
SHIELD
PGM. TRACK CHAN. 2
GND A
STOP #1
AUDIO OUT
VCC A
REMOTE START #1
START #1
VCC B
SOLENOID
LIGHT #1
+10V
-10V
GND. B
SIGMA 301 R1-24
DC-1
DC-2
IC2
IC3
Q1 2N3704
Q2 2N2222
Q3 2N3904
Q4 2N 2222
TO PIN 14 OF I.C.1 (12 PLACES)
TO PIN 7 OF I.C.1 (12 PLACES)
STOP #2
REMOTE START #2
START #2
LIGHT #2
SEE ASSY. TABLE #2
NOTES
ALL CAPACITANCE IN MFD
ALL RESISTORS 1/4W EXCEPT AS NOTED
I.C. 1-A & 1-B = FAIRCHILD UA 739 C
I.C. 2 & 3 = SIGNETICS LM 380 A
D ADD C21 THRU C24 & R33 & R34. PART VC. OF D31 D7
C-4 C3 & C13 TO .005, VOIDS C3
C-3 VALUE OF C3 & C13 .005 TO .001 8-27-75
C-2 D3 & D7 TO 751 DIODE 8-7-74
C CHANGE RESISTOR VALUES R1, R24, R4, R17, R15, R30
B CAPACITANCES & REMOVE C22 THRU C30 L.W. 9-24-70
A TO MAKE APPLICABLE TO MDL. "A" SER. NO 1009 AND ON - 4 ea 6-18-70
REVISION
ENG
DRAFT KS 5-6-70
CHECK
SCHEM: MAIN BOARD
PC-1, PC-3, PC-5, & PC-7
2 CHANNEL TYPICAL
No. 85-x 0495 Rev. D
IGM
BELLINGHAM — WASHINGTON

NOTES:

1. FOR 50HZ UNITS, C1 THRU C4 = 3.0 mf / 370 V.

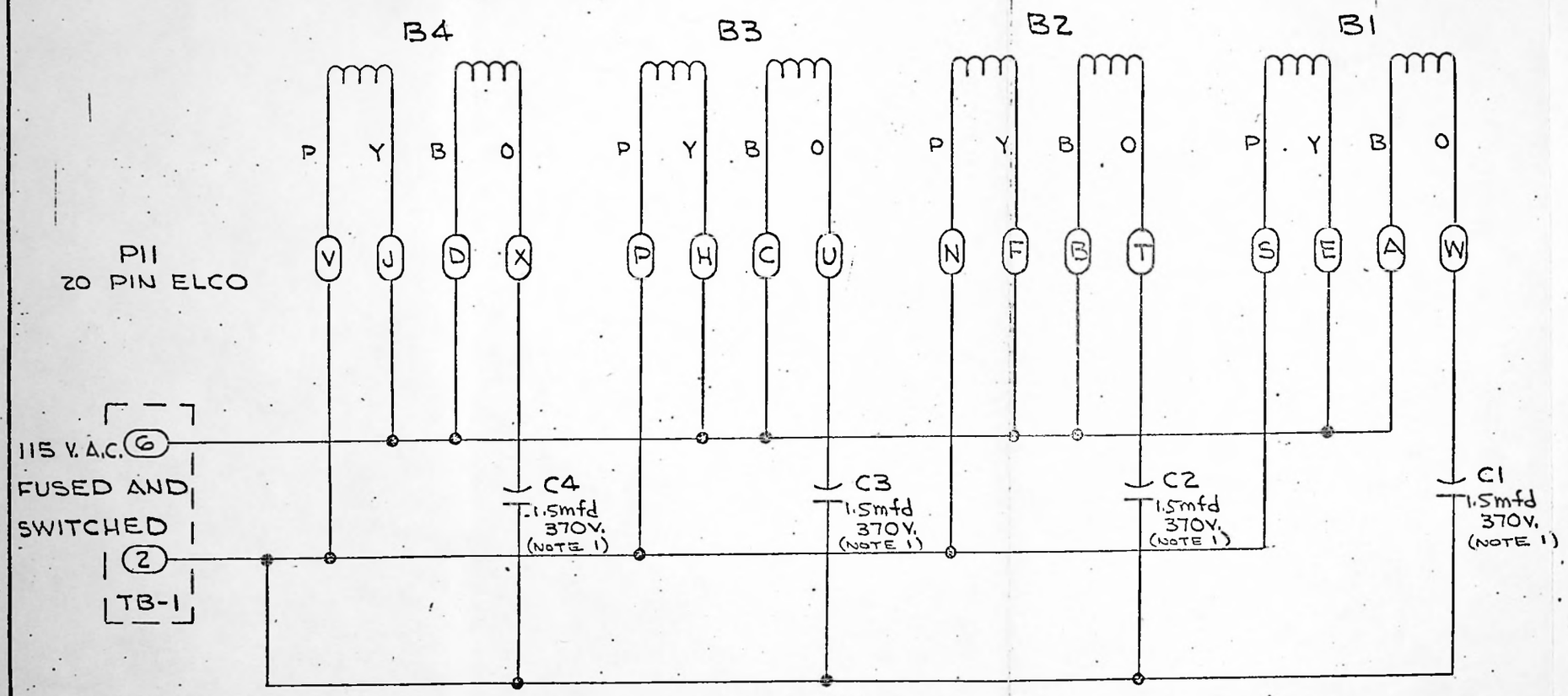

C	VALUE OF CAPS FOR 50HZ	
B	CHANGE CAP TO 1.5 mfd 370V	
A	TB-1 PIN NO.S FOR USE ON SERIAL NO. 1009 & ON	
REVISION		
ENG	GB	3-28-70
DRAFT	LW	3-28-70
CHECK		

DIAG: MOTOR WIRING DIAGRAM

No. 85-0497 Rev. C

IGM

BELLINGHAM — WASHINGTON

7699-1031-00
INSTACART FRONT PANEL
L.E.D. PCB

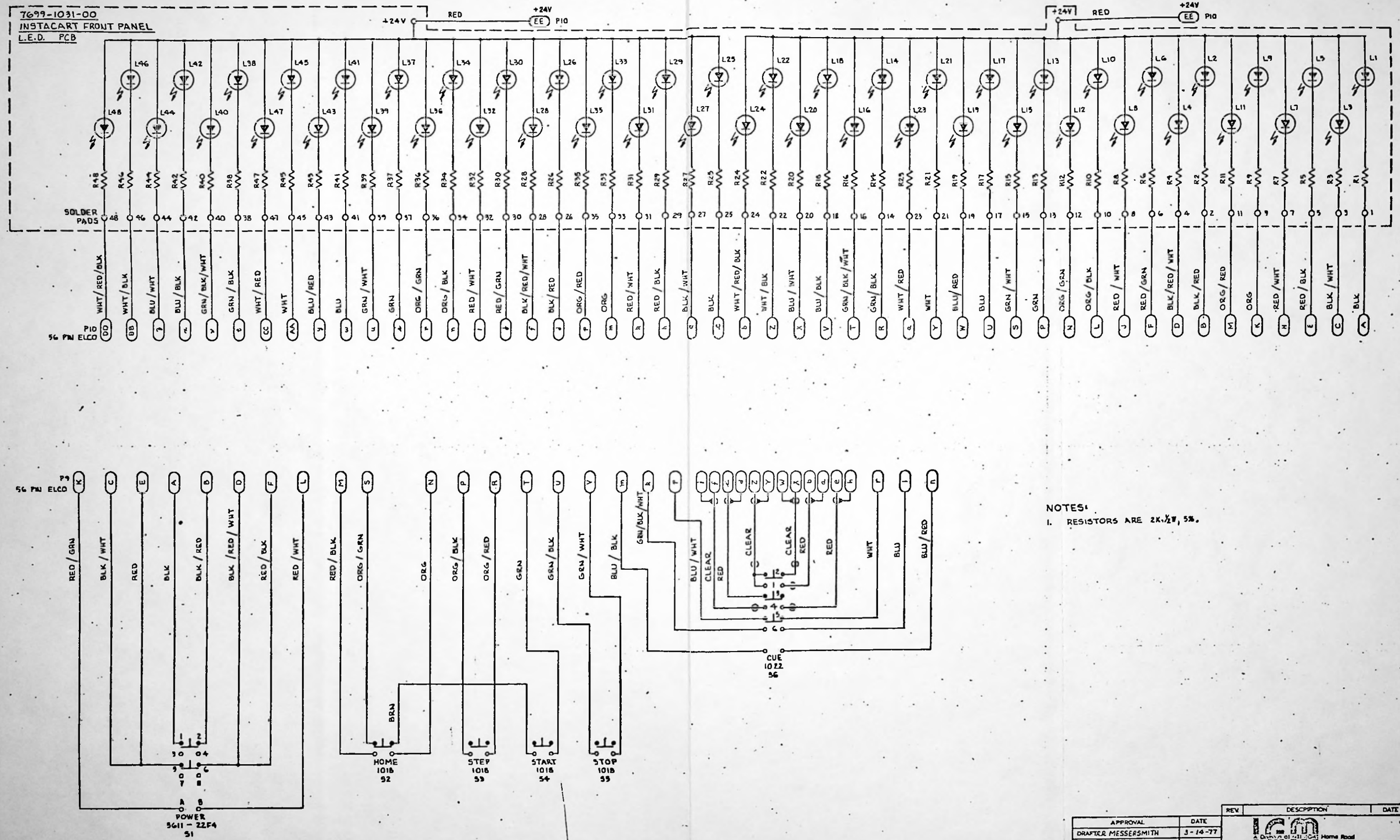

NOTES:
1. RESISTORS ARE 2K, ½W, 5%.

APPROVAL	DATE
DRAFTER MESSERSMITH	3-14-77
CHECK	
ENG.	
DIR.	

SHEET 1 OF 1 SCALE: —

THE INFORMATION CONTAINED HEREIN IS PROPRIETARY AND IS NOT TO BE REPRODUCED OR RELEASED WITHOUT WRITTEN PERMISSION OF NTI/ICM.

REV.	DESCRIPTION	DATE

ICM
A Division of NTI-ICM Home Road
Bellingham, Wa. 98225

TITLE: INSTACART
FRONT PANEL WIRING (L.E.D. PCB)

SIZE	DWG. NO.	REV.
D	7699-1071-00	

TOP VIEW

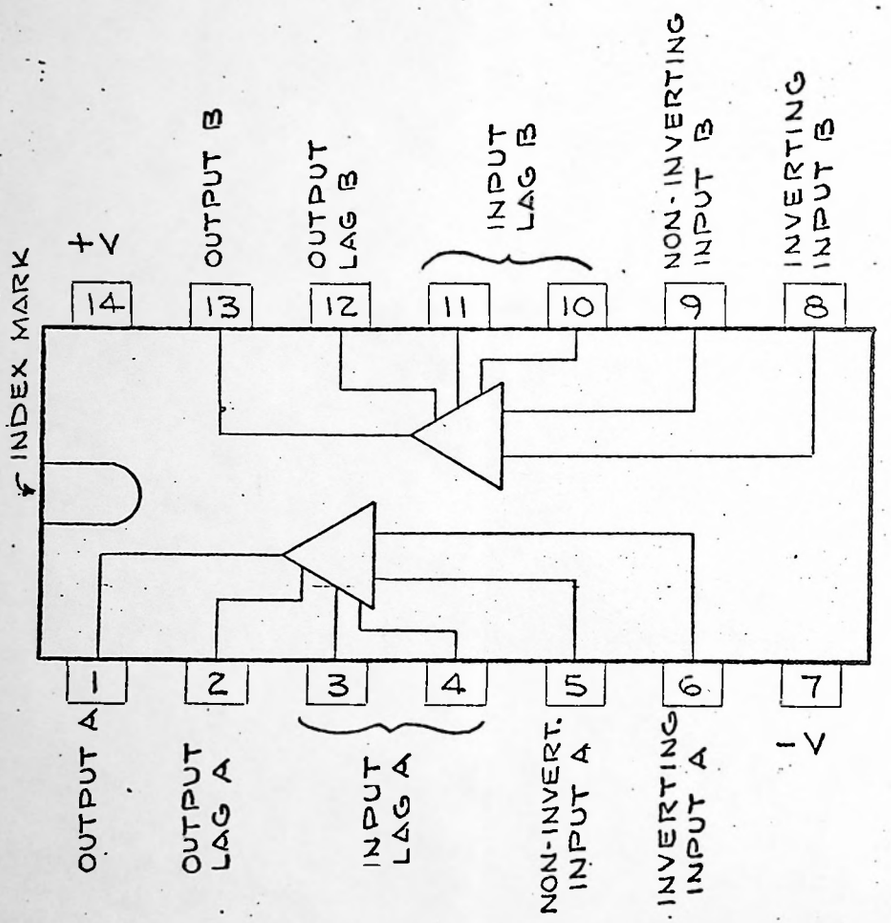

"FAIRCHILD"
μA 739 C

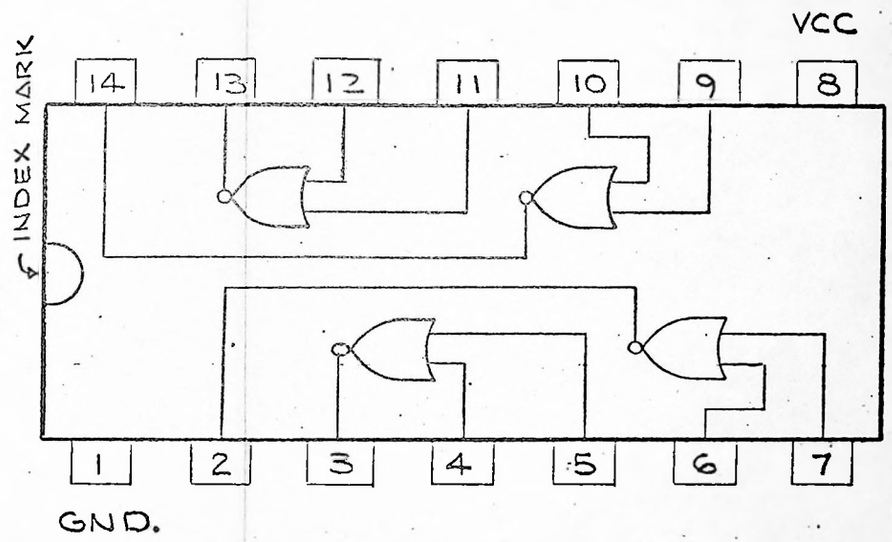

"SIGNETICS"
LU 380

REVISION		
ENG		
DRAFT	LW	6-24-70
CHECK		

PICTORIAL:
INSTACART
I.C. CONFIGURATION

No. 85-0518 Rev.

IGM
BELLINGHAM —— WASHINGTON

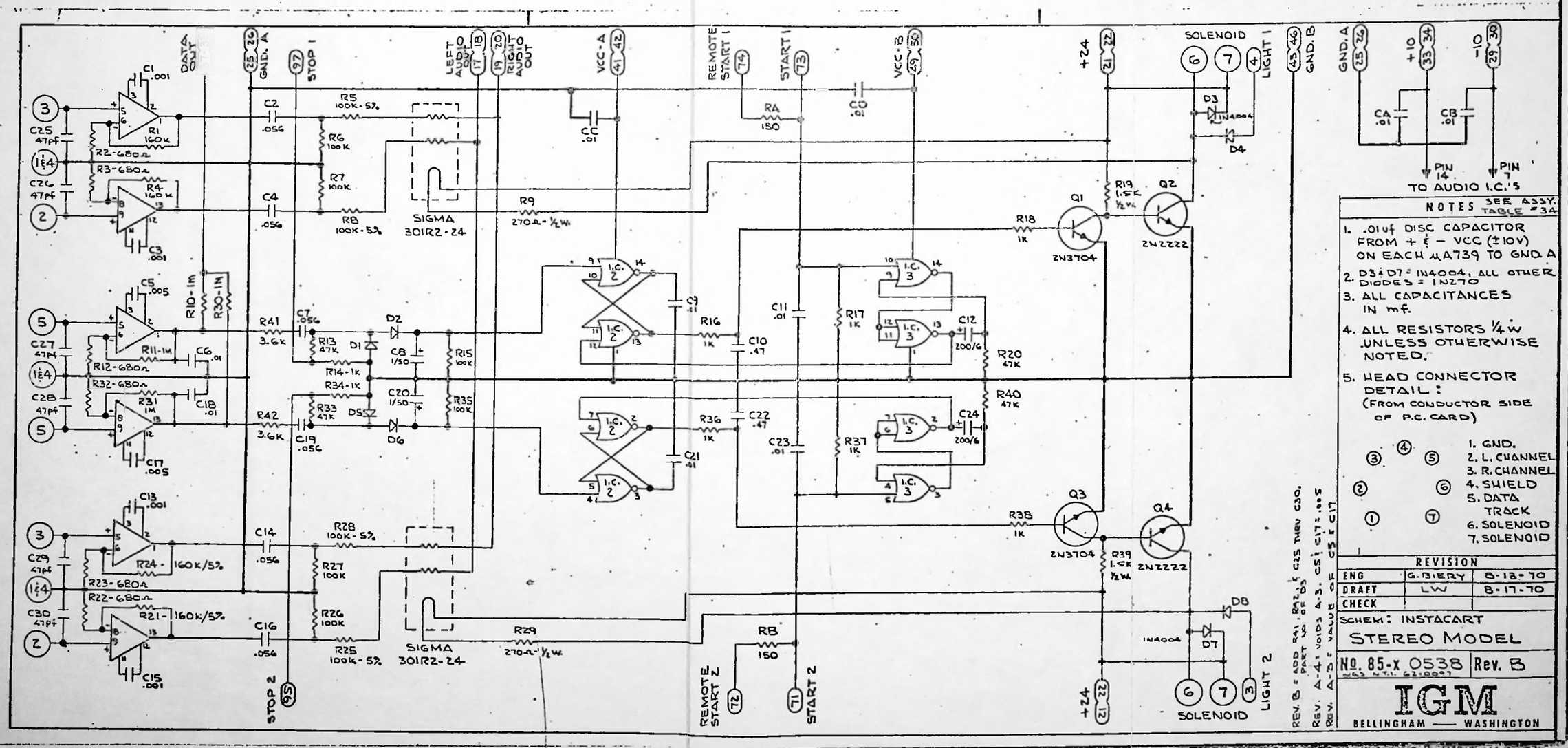
DATA OUT
GND. A
STOP 1
LEFT AUDIO OUT
RIGHT AUDIO OUT
VCC-A
REMOTE START 1
START 1
VCC-B
+24
SOLENOID
LIGHT 1
GND. B
GND. A
+10
-10
C1 .001
R1 160K
R2-680Ω
R3-680Ω
R4 160K
C3 .001
C25 47pf
C26 47pf
C2 .056
C4 .056
R5 100K-5%
R6 100K
R7 100K
R8 100K-5%
SIGMA 301R2-24
R9 270Ω-½W
CC .01
RA 150
CD .01
D3 1N4004
D4
CA .01
CB .01
PIN 14
PIN 7
TO AUDIO I.C.'S
R19 1.5K ½W
Q1 2N3704
Q2 2N2222
R18 1K
C5 .005
C6 .01
C17 .005
C27 47pf
C28 47pf
R10-1M
R30-1M
R11-1M
R12-680Ω
R32-680Ω
R31 1M
C18 .01
R41 3.6K
R42 3.6K
C7 .056
C19 .056
R13 47K
R14-1K
R33 47K
R34-1K
D1
D5
D2
D6
C8 1/50
C20 1/50
R15 100K
R35 100K
I.C. 2
C9 .01
C21 .01
R16 1K
R36 1K
C10 .47
C22 .47
C11 .01
C23 .01
I.C. 3
R17 1K
R37 1K
C12 200/6
C24 200/6
R20 47K
R40 47K
C13 .001
C15 .001
C29 47pf
C30 47pf
R23-680Ω
R22-680Ω
R24-160K/5%
R21-160K/5%
C14 .056
C16 .056
R28 100K-5%
R27 100K
R26 100K
R25 100K-5%
SIGMA 301R2-24
R29 270Ω-½W
STOP 2
REMOTE START 2
START 2
RB 150
R38 1K
Q3 2N3704
Q4 2N2222
R39 1.5K ½W
D8 1N4004
D7
+24
SOLENOID
LIGHT 2
NOTES
SEE ASSY. TABLE #34
1. .01uf DISC CAPACITOR FROM + & - VCC (±10V) ON EACH μA739 TO GND A
2. D3 & D7 = 1N4004, ALL OTHER DIODES = 1N270
3. ALL CAPACITANCES IN mf.
4. ALL RESISTORS ¼W UNLESS OTHERWISE NOTED.
5. HEAD CONNECTOR DETAIL: (FROM CONDUCTOR SIDE OF P.C. CARD)
1. GND.
2. L. CHANNEL
3. R. CHANNEL
4. SHIELD
5. DATA TRACK
6. SOLENOID
7. SOLENOID
REVISION
ENG G. BIERY 8-13-70
DRAFT LW 8-17-70
CHECK
SCHEM: INSTACART
STEREO MODEL
NO. 85-X 0538 Rev. B
IGM
BELLINGHAM — WASHINGTON

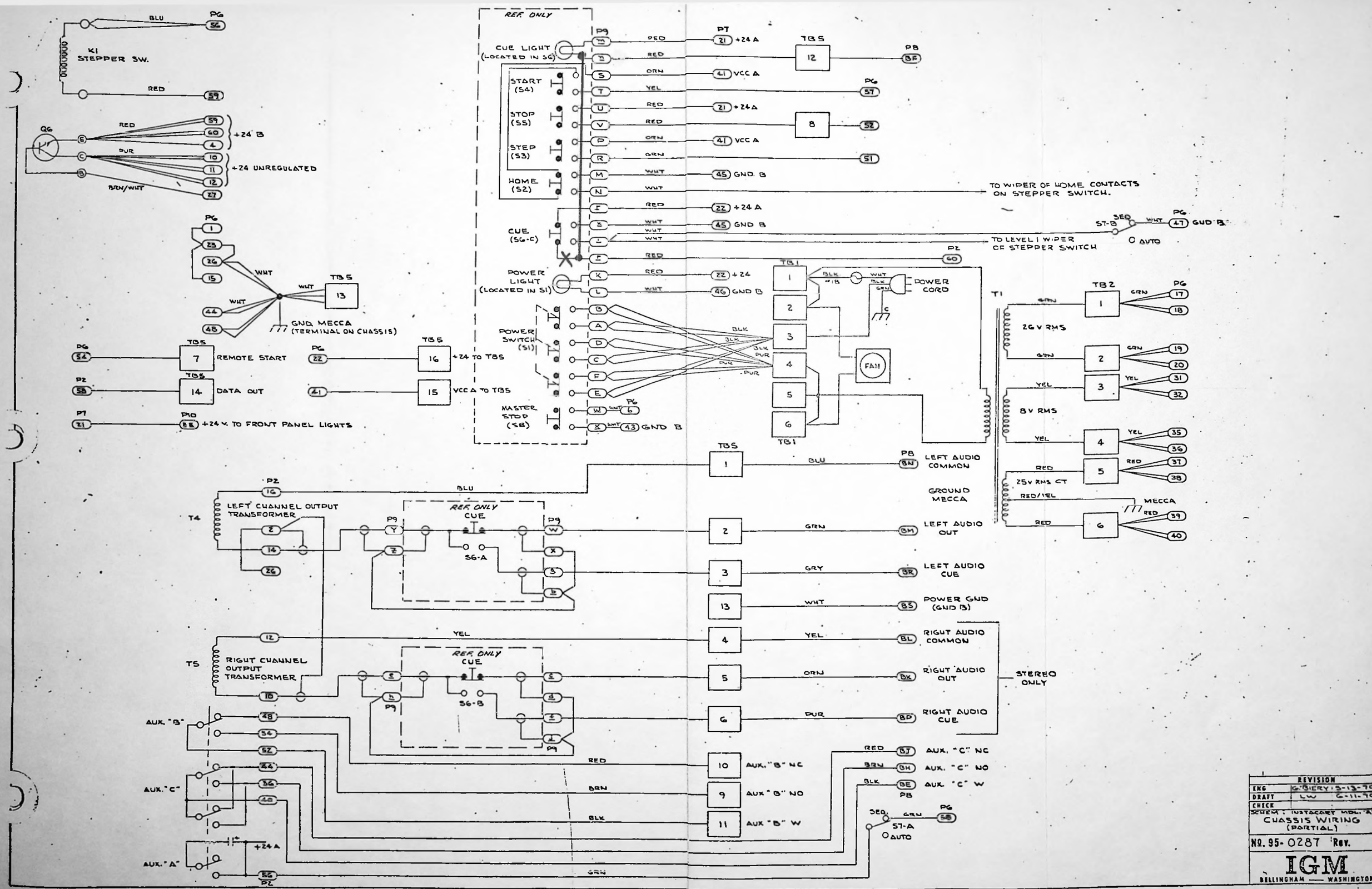
K1 STEPPER SW.
Q6
+24 B
+24 UNREGULATED
REF. ONLY
CUE LIGHT (LOCATED IN SC)
START (S4)
STOP (S5)
STEP (S3)
HOME (S2)
CUE (S6-C)
POWER LIGHT (LOCATED IN S1)
POWER SWITCH (S1)
MASTER STOP (S8)
TO WIPER OF HOME CONTACTS ON STEPPER SWITCH.
TO LEVEL 1 WIPER OF STEPPER SWITCH
GND. MECCA (TERMINAL ON CHASSIS)
REMOTE START
DATA OUT
+24 V. TO FRONT PANEL LIGHTS
+24 TO TB5
VCC A TO TB5
POWER CORD
FAN
T1
26 V RMS
8 V RMS
25 V RMS CT
MECCA
LEFT AUDIO COMMON
GROUND MECCA
LEFT AUDIO OUT
LEFT AUDIO CUE
POWER GND (GND B)
RIGHT AUDIO COMMON
RIGHT AUDIO OUT
RIGHT AUDIO CUE
STEREO ONLY
AUX. "C" NC
AUX. "C" NO
AUX. "C" W
AUX. "B" NC
AUX. "B" NO
AUX. "B" W
T4
LEFT CHANNEL OUTPUT TRANSFORMER
T5
RIGHT CHANNEL OUTPUT TRANSFORMER
REF. ONLY CUE
S6-A
S6-B
AUX. "B"
AUX. "C"
AUX. "A"
+24 A
S7-A
AUTO
REVISION
ENG G. SIERY 5-13-70
DRAFT LW 6-11-70
CHECK
SCHEM: INSTACART MDL. "A"
CHASSIS WIRING (PARTIAL)
NO. 95-0287 REV.
IGM
BELLINGHAM — WASHINGTON

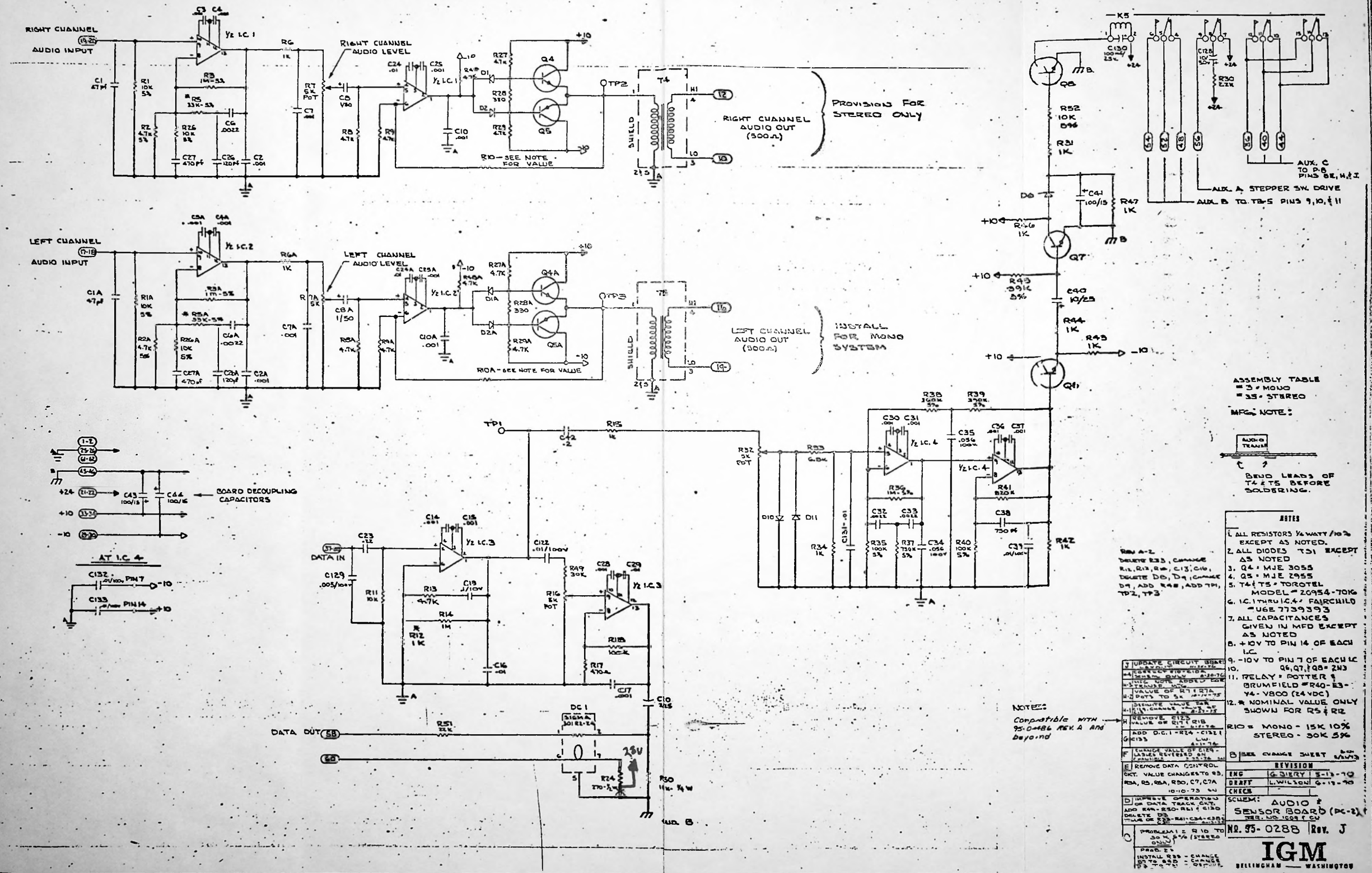
RIGHT CHANNEL AUDIO INPUT
RIGHT CHANNEL AUDIO LEVEL
½ I.C. 1
R10 - SEE NOTE FOR VALUE
RIGHT CHANNEL AUDIO OUT (500Ω)
PROVISION FOR STEREO ONLY
LEFT CHANNEL AUDIO INPUT
LEFT CHANNEL AUDIO LEVEL
½ I.C. 2
R10A - SEE NOTE FOR VALUE
LEFT CHANNEL AUDIO OUT (500Ω)
INSTALL FOR MONO SYSTEM
BOARD DECOUPLING CAPACITORS
AT I.C. 4
DATA IN
½ I.C. 3
DATA OUT
AUX. A STEPPER SW. DRIVE
AUX. B TO TB-5 PINS 9, 10, & 11
AUX. C TO P-8 PINS 6E, H, & I
ASSEMBLY TABLE
= 3 = MONO
= 33 = STEREO
MFG. NOTE:
BEND LEADS OF T4 & T5 BEFORE SOLDERING.
NOTES
1. ALL RESISTORS ¼ WATT / 10% EXCEPT AS NOTED.
2. ALL DIODES T51 EXCEPT AS NOTED
3. Q4 = MJE 3055
4. Q5 = MJE 2955
5. T4 & T5 = TOROTEL MODEL # 20954-7016
6. I.C. 1 THRU I.C. 4 = FAIRCHILD #UGE 7739393
7. ALL CAPACITANCES GIVEN IN MFD EXCEPT AS NOTED
8. +10V TO PIN 14 OF EACH I.C.
9. -10V TO PIN 7 OF EACH I.C.
10. Q6, Q7, & Q8 = 2N3
11. RELAY = POTTER & BRUMFIELD #R40-E3-Y4-V800 (24 VDC)
12. * NOMINAL VALUE ONLY SHOWN FOR R5 & R12
R10 = MONO - 15K 10%
STEREO - 30K 5%
NOTE: Compatible with 95-0486 REV. A and beyond
REVISION
ENG G. DIERY 5-13-70
DRAFT L. WILSON 6-13-70
CHECK
SCHEM: AUDIO & SENSOR BOARD (PC-2)
NO. 95-0288 REV. J
IGM
BELLINGHAM — WASHINGTON

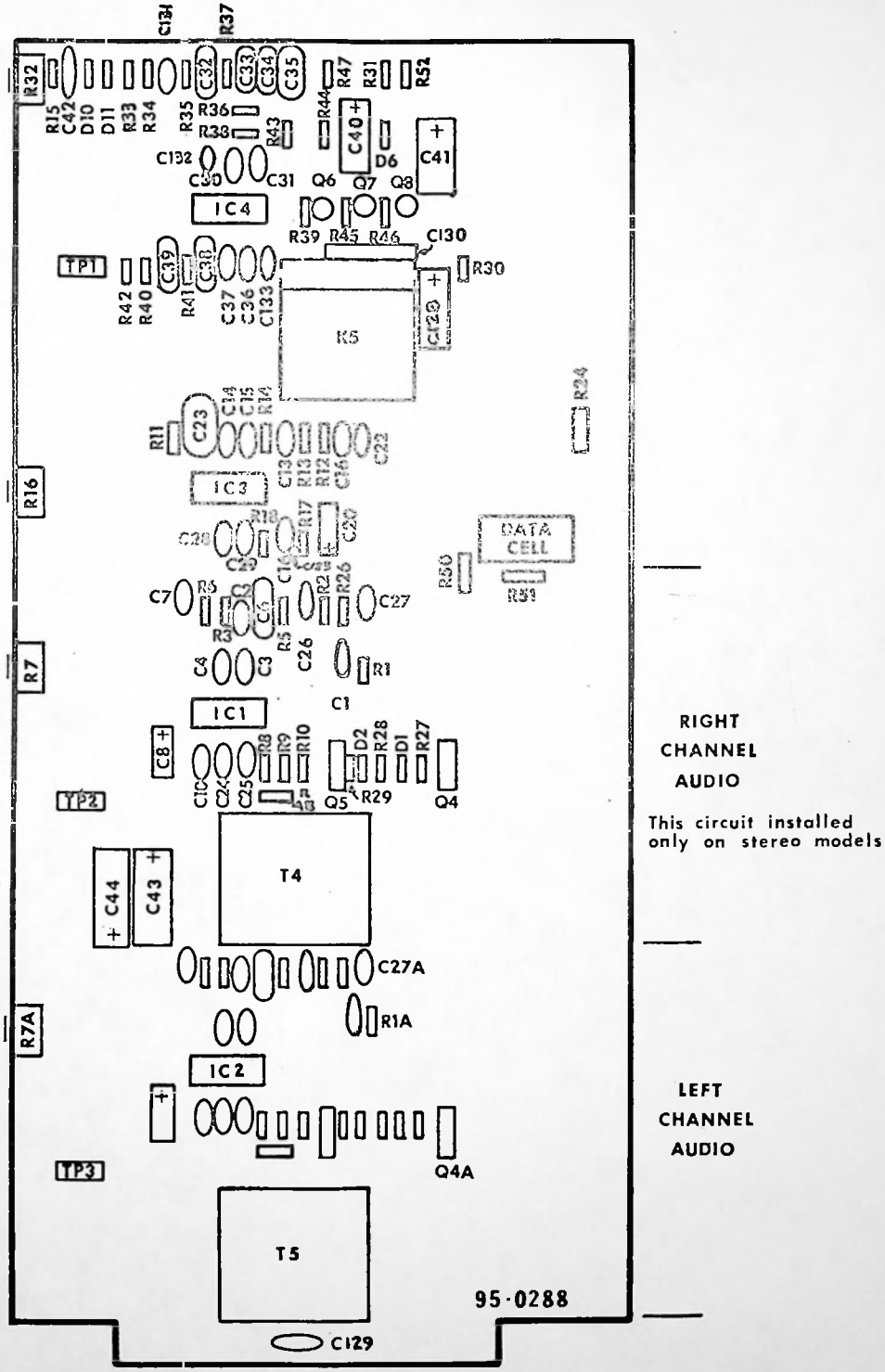

RIGHT CHANNEL AUDIO

This circuit installed only on stereo models

LEFT CHANNEL AUDIO

Audio & Sensor Board

Fig. 14

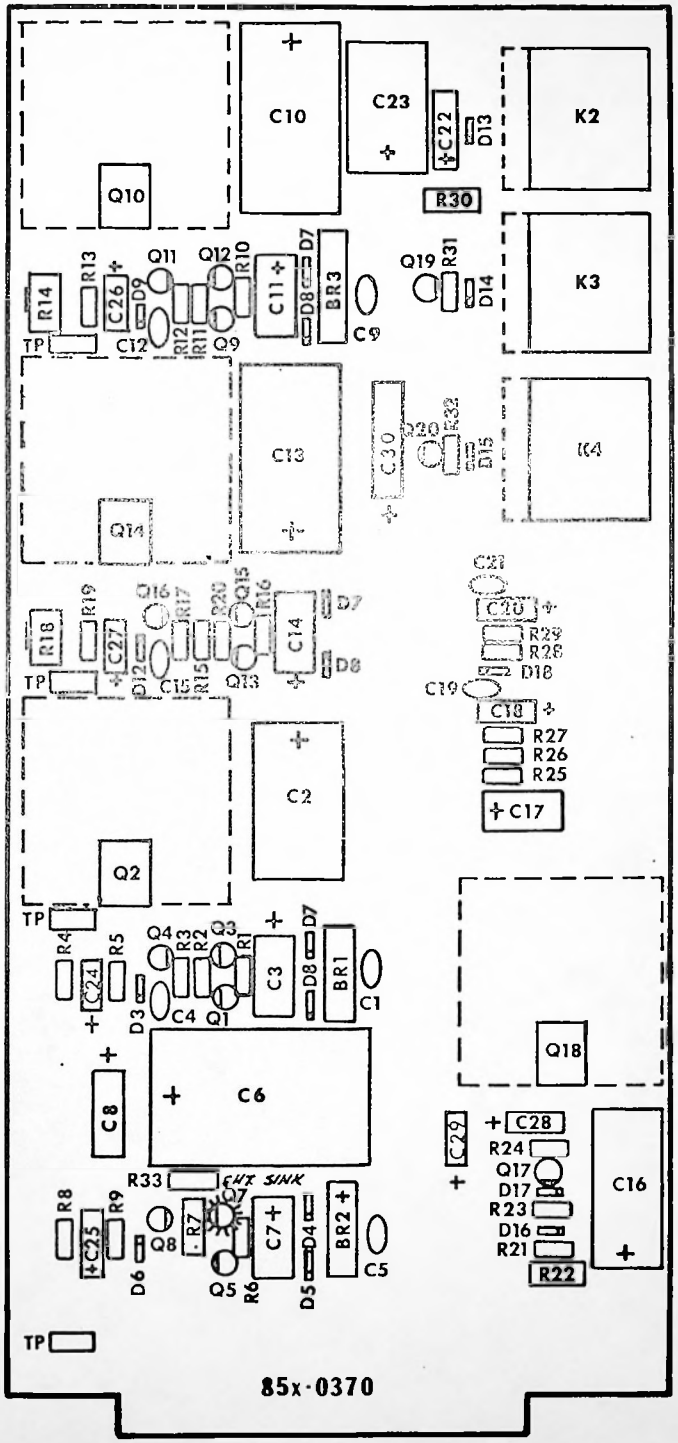

Regulator Card

Fig. 15

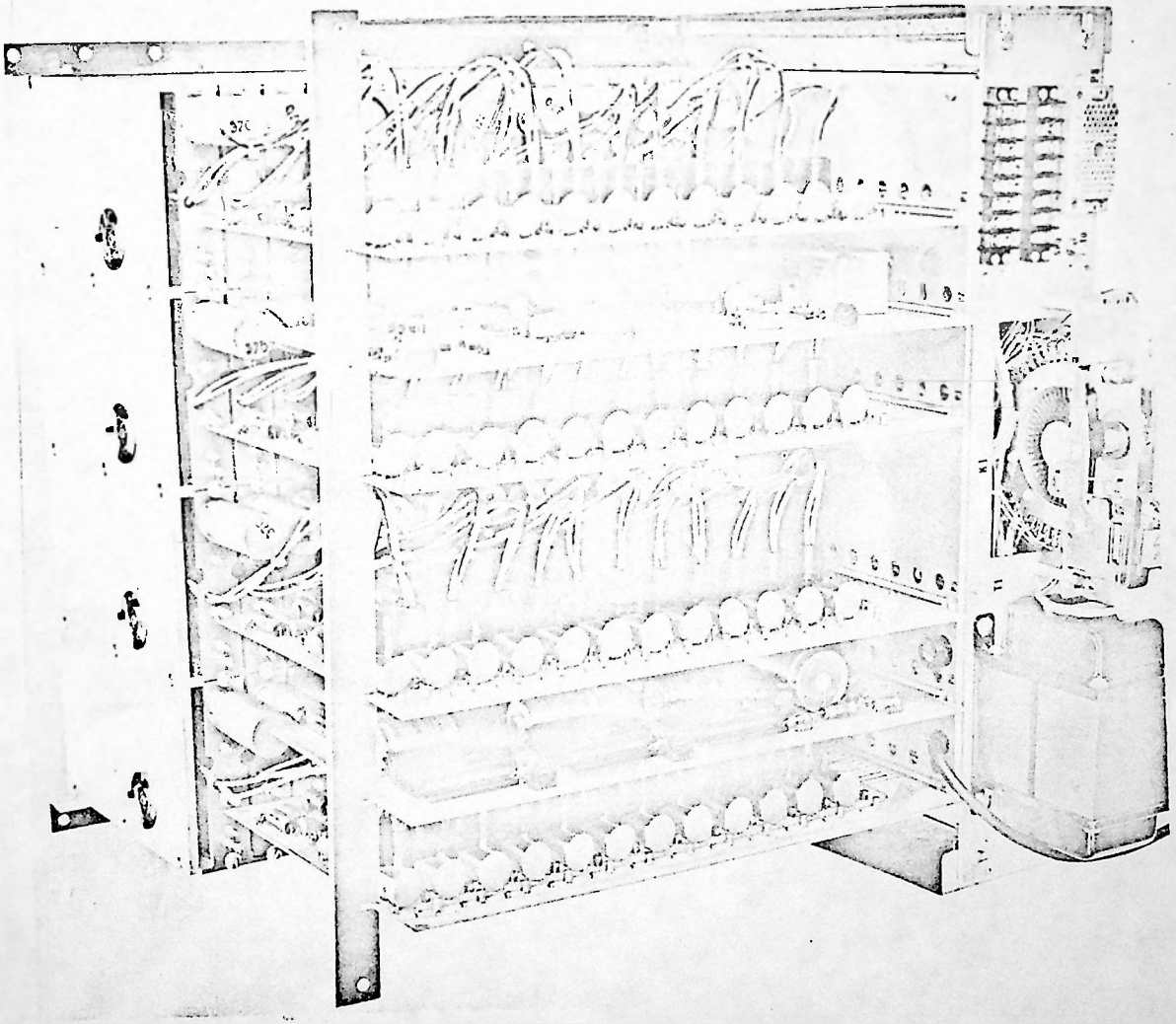

Fig. 16

Note: Component No.'s Repeated Per Each Set Of Two Trays

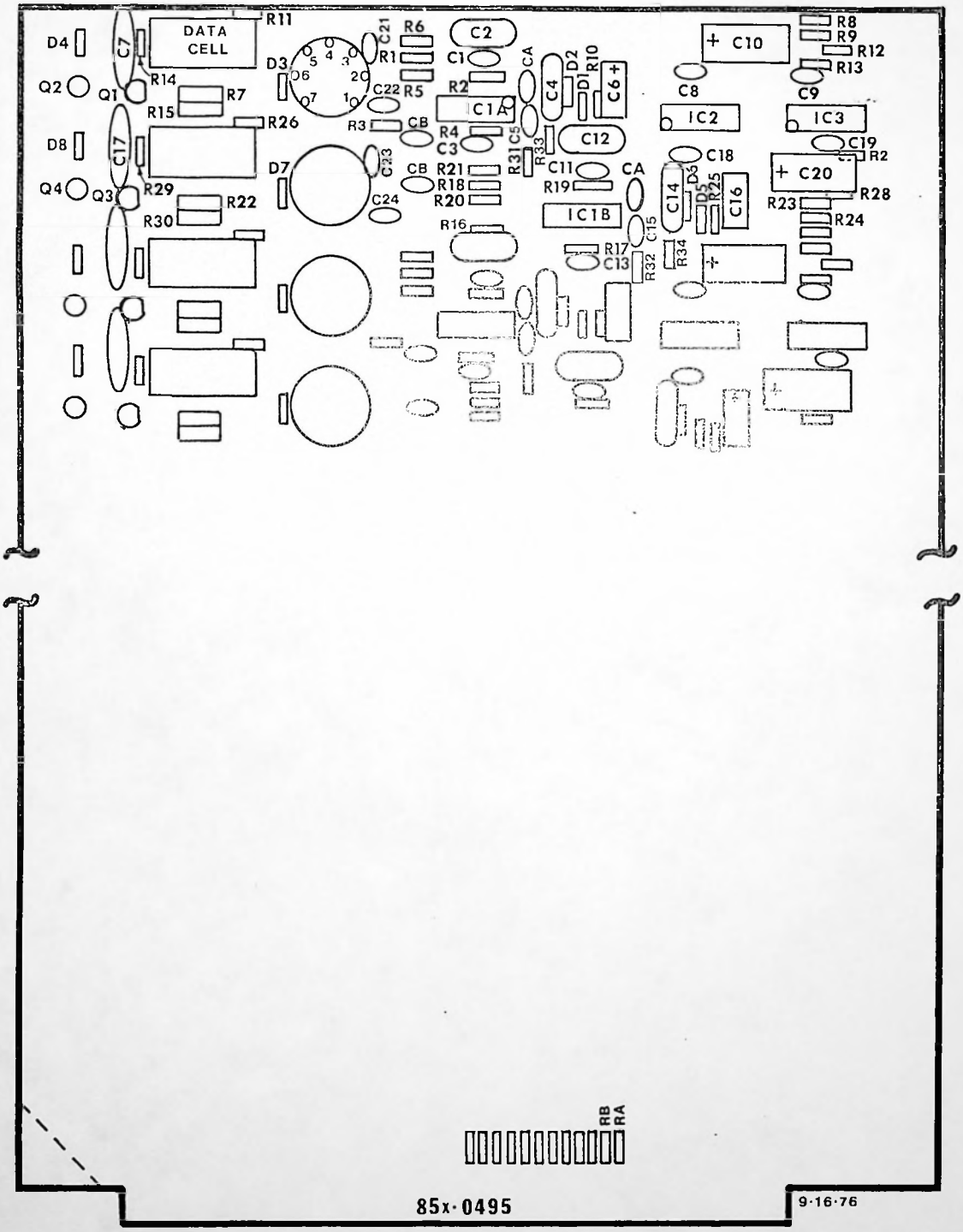

Mono Board Detail

Fig. 17

Note: Component No.'s Repeated Per Each Set Of Two Trays

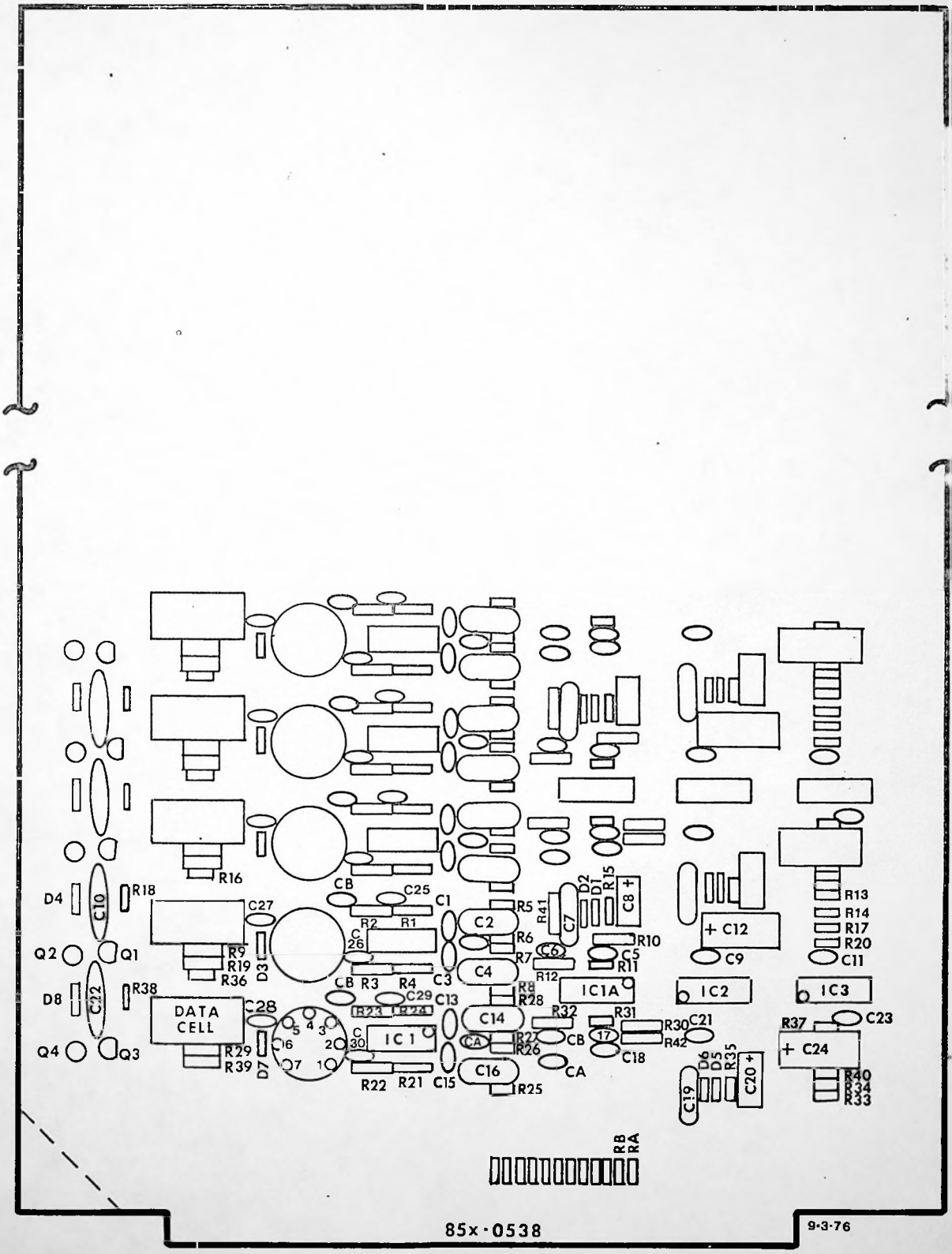

Stereo Board Detail

Fig. 18

Q1 AND 2 = 2N3704

D1 AND 3 = 1N270

D2 = 1N4729

K1 = JENCO RR10-1074 RELAY

I.C. 1 & 2 = UA 747

I.C. 3 = UA 739

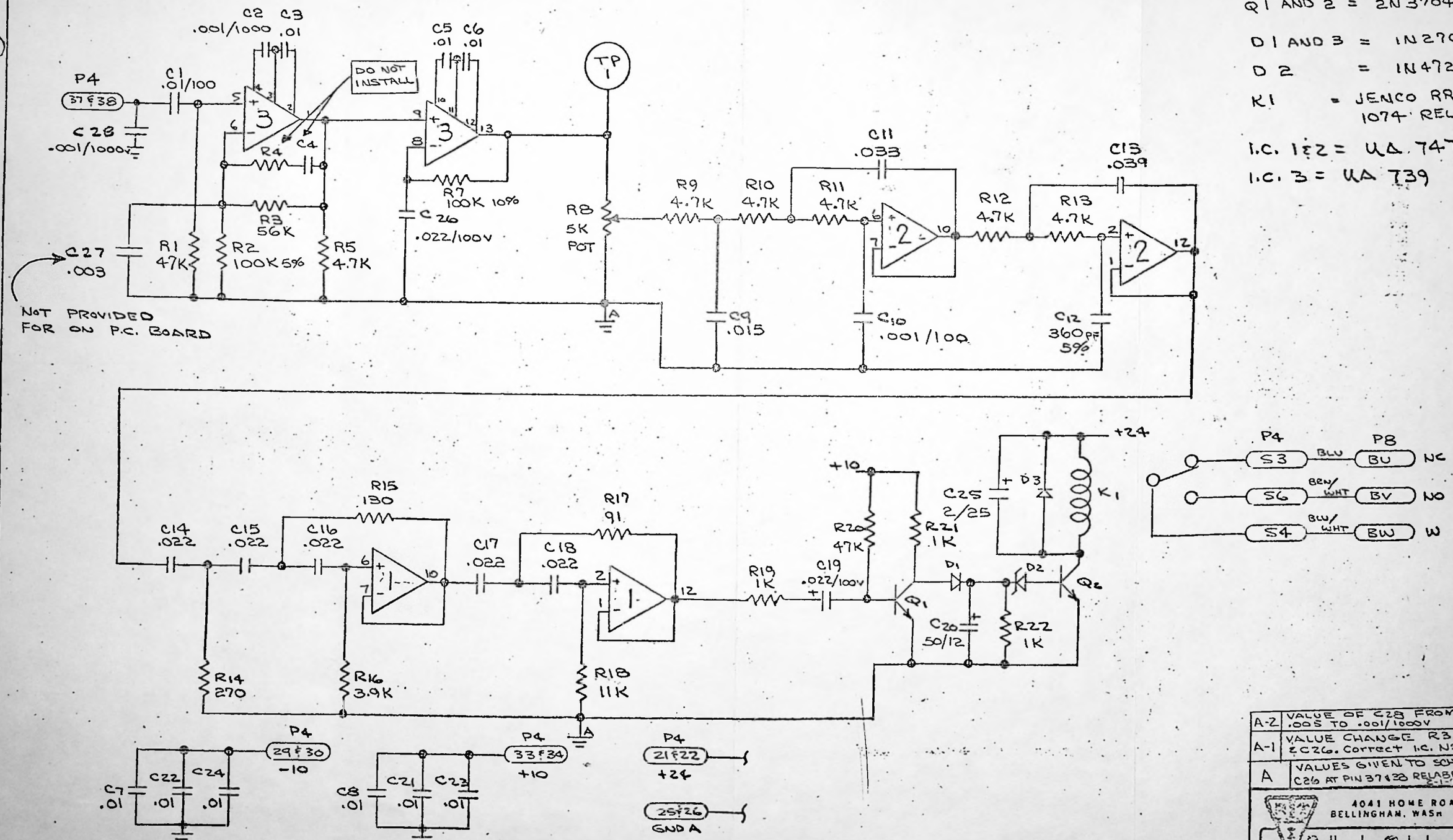

A-2	VALUE OF C28 FROM .005 TO .001/1000V L.W. 1-17-74
A-1	VALUE CHANGE R3, C19 & C26. Correct I.C. NO 10/10/7
A	VALUES GIVEN TO SCHEM. C26 AT PIN 37 & 38 RELABELED C22 5-1-73 S.N.

4041 HOME ROAD
BELLINGHAM, WASH 98225

Northwestern Technology, Inc.

TITLE DUAL AUXILIARY SENSOR PCB

NO. 85-1091 (NTI 62-0106) REV-A-2

BY G. BIERY DATE 6-10-71