MOSELEY ASSOCIATES, INC.

Warranty

All equipment designed and manufactured by Moseley Associates, Inc. is warranted against defects in workmanship and material that develop under normal use within a period of one (1) year, or (2) years for all MRC series equipment, from the date of original shipment, and is also warranted to meet any specifications represented in writing by Moseley Associates, Inc., so long as the purchaser is not in default under his contract of purchase and subject to the following additional conditions and limitations:

1. The sole responsibility of Moseley Associates, Inc. for any equipment not conforming to this Warranty shall be, at its option:

   A. To repair or replace such equipment or otherwise cause it to meet the represented specifications either at the purchaser's installation or upon the return thereof f.o.b. Goleta, California, as directed by Moseley Associates, Inc.; or

   B. To accept the return thereof f.o.b. Goleta, California, credit the purchaser's account for the unpaid portion, if any, of the purchase price, and refund to the purchaser, without interest, any portion of the purchase price theretofore paid; or

   C. To demonstrate that the equipment has no defect in workmanship or material and that it meets the represented specifications, in which event all expenses reasonably incurred by Moseley Associates, Inc., in so demonstrating, including but not limited to costs of travel to and from the purchaser's installation, and subsistence, shall be paid by purchaser to Moseley Associates, Inc.

2. In case of any equipment thought to be defective, the purchaser shall promptly notify Moseley Associates, Inc., in writing, giving full particulars as to the defects. Upon receipt of such notice, Moseley Associates, Inc. will give instructions respecting the shipment of the equipment, or such other manner as it elects to service this Warranty as above provided.

3. This Warranty extends only to the original purchaser and is not assignable or transferable, does not extend to any shipment which has been subjected to abuse, misuse, physical damage, alteration, operation under improper conditions or improper installation, use or maintenance, and does not extend to equipment or parts not manufactured by Moseley Associates, Inc. and such equipment and parts are subject to only adjustments as are available from the manufacturer thereof.

4. No other warranties, express or implied, shall be applicable to any equipment sold by Moseley Associates, Inc. and no representative or other person is authorized by Moseley Associates, Inc. to assume for it any liability or obligation with respect to the condition or performance of any equipment sold by it, except as provided in this Warranty. This Warranty provides for the sole right and remedy of the purchaser and Moseley Associates, Inc. shall in no event have any liability for consequential damages or for loss, damage or expense directly or indirectly arising from the use of equipment purchased from Moseley Associates, Inc.

MOSELEY ASSOCIATES, INC.
A FLOW GENERAL COMPANY
SANTA BARBARA RESEARCH PARK

111 CASTILIAN DRIVE
GOLETA, CALIFORNIA 93017
TELEPHONE: (805) 968-9621
TELEX: 658448 CABLE: MOSELEY

INSTRUCTION MANUAL

MODEL PCL-606/C
(940-960 MHz)

COMPOSITE

AURAL

STUDIO-TO-TRANSMITTER LINK

MOSELEY ASSOCIATES, INC.
Santa Barbara Research Park
111 Castilian Drive
Goleta, California 93117

January 1985

(805) 968-9621
TELEX: 658-448

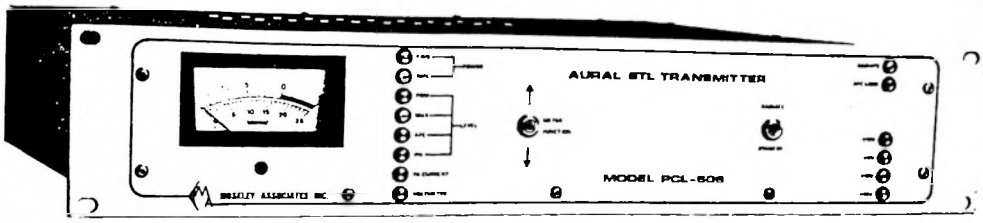

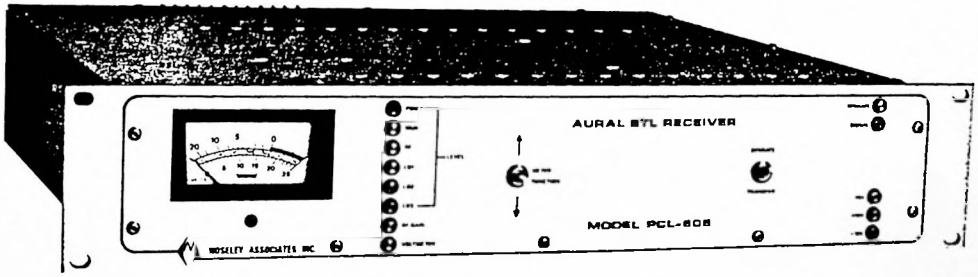

Model PCL-606/C Composite Aural

Studio-to-Transmitter Link

TABLE OF CONTENTS

Section		Page
	List of Illustrations	v-vi
	Glossary	vii
1	SYSTEM CHARACTERISTICS	
	1.1 Introduction	1-1
	1.2 System Specifications	1-1
	1.2.1 Transmitter Specifications	1-2
	1.2.2 Receiver Specifications	1-2
	1.3 System Features	1-3
	1.4 Operational Controls	1-4
	1.4.1 Purpose	1-4
	1.4.2 Transmitter Front Panel	1-4
	1.4.3 Receiver Front Panel	1-7
	1.4.4 Transmitter Operational Adjustments	1-8
	1.4.5 Receiver Operational Adjustments	1-10
2	SYSTEM DESCRIPTIVE INFORMATION	
	2.1 Transmitter	2-1
	Composite Audio Processor	2-1
	FMO Synthesizer	2-1
	Up Converter	2-2
	First Local Oscillator and Multiplier	2-2
	RF Amplifier	2-3
	Transmitter Control	2-3
	Metering and Status	2-3
	Power Supply	2-4
	2.2 Receiver	2-4
	Preselector Filter	2-4
	Preamplifier and First Mixer	2-4
	First Local Oscillator and Multiplier	2-4
	Double Converter	2-4
	Second and Third Local Oscillator	2-8
	FM Demodulator	2-8
	Composite Baseband Processor	2-9
	Metering and Status	2-10
	Mute and Transfer	2-10
	Power Supply	2-10

Section		Page
1	MOSELEY ASSOCIATES GENERAL INFORMATION	
	3.1 Equipment Issue Identification System	3-1
	3.2 Customer Service Information	3-2
	Telephone Consultation	3-2
	Replacement Modules	3-3
	Field Repair	3-3
	Factory Service	3-4
4	INSTALLATION	
	4.1 Unpacking	4-1
	4.2 Line Voltage Selection	4-2
	4.3 Preinstallation Checkout	4-3
	Receiver Selectivity Selection	4-6
	4.4 Rack Installation	4-6
	4.5 Antenna Installation	4-7
	4.6 Transmission Cables	4-7
	4.7 Program and Multiplex Installation - Transmitter	4-8
	4.8 Program and Multiplex Interconnect - Receiver	4-13
	4.9 Main/Standby Interconnect	4-13
	4.9.1 Transmitter Interconnect	4-14
	4.9.2 Receiver Interconnect, PCL-606/ PCL-606	4-14
	4.9.3 Receiver Interconnect, PCL-606/ Other	4-18
	4.10 Remote Control of the STL Transmitter	4-18
5	MODULE CHARACTERISTICS	
	5.1 Introduction	5-1
	5.2 Module Descriptions	5-1
	Transmitter	
	Composite Audio Processor	A-1
	FMO Synthesizer	B-1
	Up Converter	C-1
	First Local Oscillator and Multiplier	D-1
	RF Amplifier	E-1
	Metering and Status	F-1
	Transmitter Control	G-1
	Power Supply	H-1
	Receiver	
	Preselector Filter	I-1
	Preamplifier and First Mixer	J-1
	First Local Oscillator and Multiplier	K-1
	Double Converter	L-1

Section		Page
	Second and Third Local Oscillator	M-1
	FM Demodulator	N-1
	Composite Baseband Processor	O-1
	Metering and Status	P-1
	Mute and Transfer	Q-1
	Power SupplyR-1	
6	ALIGNMENT PROCEDURES	
6.1	Introduction	6-1
6.2	Test Equipment	6-1
6.3	Alignment Procedures	6-1
6.3.1	STL Frequency Alignment	6-4
6.3.2	Receiver Sensitivity	6-8
6.3.3	Receiver Selectivity	6-12
6.3.4	Transmitter Deviation, and Receiver Output Level Calibration	6-15
6.3.5	Ultimate Signal-to-Noise Ratio	6-22
6.3.6	Distortion Alignment	6-26
6.3.7	Stereo Separation and Stereo Signal-to-Noise Ratio	6-30
6.3.8	Stereo Crosstalk	6-36
6.4	Module Adjustments	
6.4.A	Composite Audio Processor	6-43
6.4.B	FMO Synthesizer	6-44
6.4.C	Up Converter	6-49
6.4.D	First Local OScillator and Multiplier	6-50
6.4.E	RF Amplifier	6-51
6.4.F	Metering and Status	6-52
6.4.G	Transmitter Control	6-53
6.4.H	Power Supply	6-53
6.4.I	Preselector Filter	6-54
6.4.J	Preamplifier and First Mixer	6-55
6.4.K	First Local Oscillator and Multiplier	6-56
6.4.L	Double Converter	6-57
6.4.M	Second and Third Local Oscillator	6-60
6.4.N	FM Demodulator	6-61
6.4.O	Composite Baseband Processor	6-62
6.4.P	Metering and Status	6-63
6.4.Q	Mute and Transfer	6-64
6.4.R	Power Supply	6-64
6.5	General Troubleshooting Information	6-65
6.5.1	Transmitter Troubleshooting Procedure	6-65
6.5.2	Receiver Troubleshooting Procedure	6-67
6.6	Test Fixture Diagrams	6-68

Section		Page
7	RECOMMENDED SPARES	
	7.1 Introduction	7-1
	7.2 Spare Transmitter Modules	7-1
	7.3 Spare Receiver Modules	7-2
	7.4 Spare Parts Kits	7-3
8	FACTORY TEST RESULTS	8-1
APPENDIX - STL PATH EVALUATION		9-1

ILLUSTRATIONS

Figure		Page
1-1	Transmitter front panel.	1-5
1-2	Receiver front panel.	1-9
1-3	Typical SNR curves.	1-12
2-1	Typical Stereo Quieting Characteristics of PCL-606/C Receiver	2-6
2-2	Typical Selectivity Characteristics of PCL-606/C Receiver - Narrow IF Mode	2-7
4-1	Typical bench test setup.	4-4
4-2	Typical PCL-606 transmitter RF connections.	4-9
4-3	Typical PCL-606 receiver RF connections.	4-10
4-4	Transmitter program and multiplex interconnections.	4-11
4-5	Receiver program and multiplex interconnections.	4-15
4-6	Main/standby transmitter interconnect.	4-16
4-7	Main/standby receiver interconnect, PCL-606/PCL-606.	4-17
4-8	Main/standby receiver interconnect, PCL-606/Other.	4-19
4-9	Extension control panel connections.	4-20
F-1	Simplified diagram of absolute value amplifier	F-2
P-1	Simplified diagram of absolute value amplifier	P-2
6-1	Test setup for frequency alignment.	6-4
6-2	Sensitivity test setup.	6-8
6-3	Selectivity test setup.	6-12
6-4	Test setup for deviation alignment.	6-15
6-5	Bessel null function waveforms.	6-18

Figure		Page
6-6	Test setup for MUX channel alignment.	6-19
6-7	Test setup for signal-to-noise ratio measurement.	6-23
6-8	STL distortion alignment.	6-26
6-9	Stereo separation test setup.	6-30
6-10	Swept separation waveform.	6-33
6-11	Stereo crosstalk test setup.	6-37
6-12	Nonlinear crosstalk..	6-40
6-13	Test setup for FMO adjustment.	6-45
6-14	Test setup for measuring the preselector insertion loss.	6-54
6-15	50 Hz high-pass filter.	6-69
6-16	75 microseconds de-emphasis network with 30 Hz high-pass filter.	6-69
6-17	Audio amplifier.	6-69
6-18	Stereo source selector.	6-70

GLOSSARY

AFC	automatic frequency control
AGC	automatic gain control
FET	field effect transistor
IC	integrated circuit
IMD	imtermodulation distortion
IPA	intermediate power amplifier
LED	light-emitting diode
LO	local oscillator
MUX	multiplex
NC	normally closed
NO	normally open
PC	printed circuit
RCVR	receiver
SCA	subsidiary communications authority
SRD	Step Recovery Diode
SNR	signal-to-noise ratio
STL	studio-to-transmitter link
THD	total harmonic distortion
TTL	transistor-transistor logic
XMTR	transmitter

SECTION 1

SYSTEM CHARACTERISTICS

1.1 INTRODUCTION

The model PCL-606/C Studio-to-Transmitter Link (STL) is designed to convey composite FM stereo program material from a studio site to a transmitter site. The PCL-606/C also simultaneously conveys control and secondary programming subcarriers. This equipment may also be used to provide high-quality program transmission in intercity relay service.

The PCL-606 series of equipment is a family of equipment that can operate in several bands from 148 MHz through 1.7 GHz. This manual is for a composite system operating in the 940 MHz to 960 MHz region.

1.2 SYSTEM SPECIFICATIONS

The system specifications for a composite PCL-606/C in the 940 - 960 MHz band are as follows:

Frequency Range	940-960 MHz
Wide-band Frequency Response	±0.1 dB from 30 Hz to 53 kHz
Standard (100 kHz option)	±0.3 dB from 53 kHz to 73 kHz (53 kHz to 99 kHz)
Distortion: THD and IMD	0.3% (0.2%) or less from 30 Hz to 53 kHz. Typically better than 0.1% (0.7%) at 1 kHz.
SNR (ultimate wide-band de-emphasized)	75 dB
SNR (ultimate demodulated left or right)	72 dB
Stereo separation	48 dB
Nonlinear crosstalk: main channel to subchannel or subchannel to main channel. Narrow (wide) IF	50 dB (54 dB) or better
Operating temperature	0°C to +50°C

Emission	206F9 (no subcarrier) 244F9 (67 kHz program subcarrier) 330F9 (110 kHz control subcarrier) 485F9 (185 kHz program subcarrier) 495F9 (110 kHz and 185 kHz subcarriers)

1.2.1 Transmitter Specifications

Type	Solid state, direct FM, frequency synthesized, crystal referenced
RF Power	5 watts minimum, 10 watts maximum Type N connector
Frequency stability	±.00025%
Deviation	±50 kHz for 100% modulation
Harmonic suppression	Better than 60 dB below carrier
Spurious emission	Better than 60 dB below carrier
Composite	3.5 V p-p, unbalanced, BNC connector
Multiplex	1.5 V p-p, unbalanced BNC connector
Power requirements	100/120/220/240 Vac ±10% 50-60 Hz, 70 watts
Dimensions	8.9 cm (3.5 inches) high 48.4 cm (19 inches) wide 40.7 cm (16 inches) deep
Shipping weight	12.7 kg (28 lb) domestic

1.2.2 Receiver Specifications

Sensitivity de-emphasized wide-band	Less than 30 microvolts for 60 dB SNR
Sensitivity demodulated left or right	Less than 150 microvolts. 115 microvolts typical for 60 dB SNR

IF Bandwidth Narrow (wide)	3 dB ±100 kHz (±150 kHz) 60 dB ±450 kHz (±850 kHz) 80 dB ±1 MHz (±2 MHz)
Composite outputs (2) Standard (100 kHz option)	0.1 Hz to 80 kHz, (0.1 Hz to 100 kHz) 3.5 V p-p, unbalanced, BNC connector
Multiplex outputs (2) Standard (100 kHz option	85-200 kHz, (110 - 200 kHz) 1.5 V p-p, unbalanced BNC connector
Power requirements	100/120/220/240 Vac ±10% 50-60 Hz, 30 watts
Dimensions	8.9 cm (3.5 inches) high 48.4 cm (19 inches) wide 40.7 cm (16 inches) deep
Shipping weight	12.7 kg (28 lb) domestic

1.3 SYSTEM FEATURES

In addition to establishing a new industry standard for performance, the PCL-606 incorporates many new and innovative features to aid in the installation, operation, and maintenance of a system. Some of the features are:

- A PIN Diode Attenuator in the receiver to allow optimization of SNR performance in high-density, high-signal-strength areas.
- A wide-band, adjustment-free, digital FM demodulator.
- Dual ceramic, adjustment-free, very low distortion IF filters offering unprecedented selectivity.
- The choice of two selectable IF bandwidths to optimize distortion as a function of adjacent or alternative channel rejection.
- A built-in peak reading meter for all major functions.
- A four-decade logarithmic true signal strength meter.

- Built-in internal test metering capability.
- Important status functions implemented with two-color LED indicators.
- Designed to have a minimum of adjustments for trouble-free operation.
- Modular construction that provides excellent shielding and at the same time allows easy access to components.
- Built-in receiver switch-over circuits that permit a pair of PCL-606s to accomplish automatic switch-over upon detection of a fault without additional transfer panels.

It is recommended that the manual be studied at least through Section 5 before attempting to install the system.

1.4 OPERATIONAL CONTROLS

1.4.1 Purpose

This subsection describes the controls and adjustments of a PCL-606/C system that the user will encounter in normal operation and initial setup. The units once installed and set up require no further operator attention.

1.4.2 Transmitter Front Panel

The PCL-606 transmitter front panel depicted in Figure 1-1 contains eight LED indicators for the metering function. One of the LEDS is always on to indicate the function displayed on the panel meter. The function displayed may be changed by activating the METER FUNCTION switch up or down. Each activation causes the function to change by one step in the direction selected. The meter functions and scales used are:

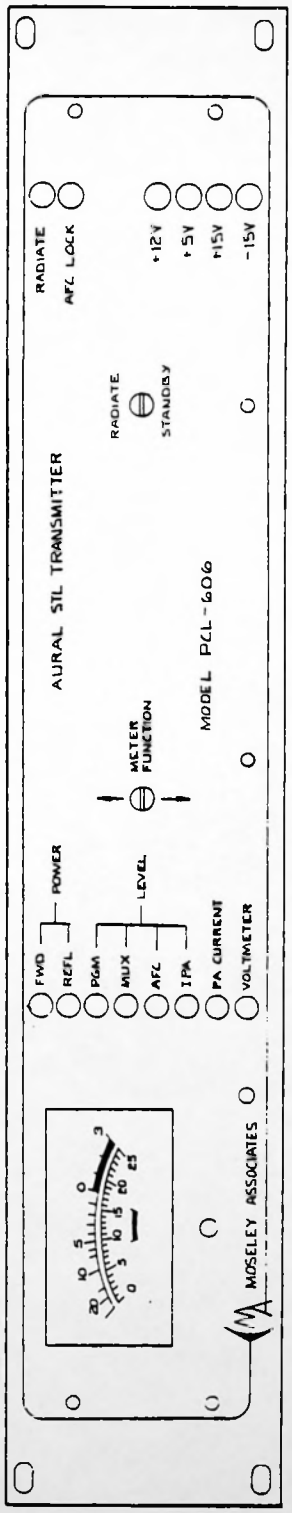

Figure 1-1

Transmitter Front Panel

Function	Scale	Units	Notes
FWD POWER	dB	dB	Power in dB relative to full output. 0 dB = full output.
REFL POWER	dB	dB	Power in dB relative to full output. 0 dB = 100% reflected power.
PGM LEVEL	dB	dB	0 dB = 3.5 V p-p input, 100% modulation.
MUX LEVEL	Linear	kHz	Deviation of the main carrier by the subcarriers.
AFC LEVEL	Lower arc	None	Meter should indicate within lower arc.
IPA LEVEL	Lower arc	None	Meter should indicate within lower arc.
PA CURRENT	Linear	Tenths of Amperes	15 = 1.5 amps
VOLTMETER	Linear	Volts	Internal test probe socket.

The meter is an absolute value peak-reading type with fast ballistics, since the purpose of the meter is to observe the peak values of modulation which affect the deviation of the Transmitter. When using the meter in the VOLTMETER mode, a bicolor LED located near the test probe socket will indicate the polarity of the voltage being measured (red = +, green = -, and orange = ac).

Four power supply LEDs indicate the condition of each of the power supplies. The normal indication is green. A power supply failure will cause the LED to extinguish.

The two transmitter status LEDs are of the two-color, red-green type. The AFC LOCK LED is green when the FMO Synthesizer has achieved a lock condition. When AFC LOCK is red, it indicates that an unlock condition exists. This

inhibits any radiation of RF power, resulting in the RADIATE LED being red. When power is initially applied to the Transmitter, it is normal for the AFC LOCK LED to be red for several seconds.

The RADIATE LED will be green when the Transmitter is supplying RF power and red when not supplying RF power. This LED is controlled by internal interlock controls, the RADIATE/STANDBY switch, and any external logic associated with main/standby operation.

The RADIATE/STANDBY switch functions as an on/off switch for the RF power output. In the RADIATE position, the RF power will be on provided all of the internal interlocks are enabled. In the STANDBY position, RF radiation is controlled by external switching control and the internal interlocks.

1.4.3 Receiver Front Panel

The operation of the receiver front panel controls is very similar to the transmitter controls. Figure 1-2 shows the receiver front panel.

A METER FUNCTION switch can step up or down the selection of the function to be displayed on the meter. The receiver meter has four scales. The top scale is calibrated in dB (absolute value peak indicating) followed by a four-decade logarithmic scale, which in turn is followed by a 0 to 25 linear scale. A small center reference scale on the bottom is used for relative go/no-go indications. The scale used for each function is:

Function	Scale	Units	Notes
PGM LEVEL	dB	dB	0 dB is 3.5 V p-p
MUX LEVEL	Linear	kHz	Deviation of the main carrier by the sub-carriers.
RF LEVEL	Log	micro-volts	RF signal level at the receiver input.
LO1 LEVEL	Lower arc	None	Meter should indicate within lower arc.

Function	Scale	Units	Notes
LO2 LEVEL	Lower arc	None	Meter should indicate within lower arc.
LO3 LEVEL	Lower arc	None	Meter should indicate within lower arc.
RF GAIN	Linear	Volts	15 = full gain, 0 = max attn.
VOLTMETER	Linear	Volts	Internal test probe socket.

The three power status LEDs indicate green if the respective power supply is operating and are not illuminated if the supply voltage is not present.

Two dual-color status LEDs indicate the operational status of the Receiver; these are SIGNAL and OPERATE. The SIGNAL LED is green when there is sufficient RF signal to exceed a user-established threshold of RF signal that correlates to the minimum SNR that is acceptable to the user. When the SIGNAL LED is red, there is insufficient signal to meet the minimum SNR requirements and the Receiver is placed in a non-operating muted condition, which is indicated by a red OPERATE LED. When the receiver is operating properly, the OPERATE LED is green.

The OPERATE/TRANSFER switch is two-position, with the TRANSFER position being momentary. It is used to cause a switch-over to an alternate PCL-606 Receiver when a pair is used in a main/standby configuration. Only one receiver will have its OPERATE LED green; this is the receiver supplying the program and multiplex material.

1.4.4 Transmitter Operational Adjustments

Without removing the cover of the Transmitter, the user has access to several operational adjustments. These adjustments are primarily used to balance the various program levels when used in main/standby configurations. The locations of these adjustments are shown on the transmitter cover.

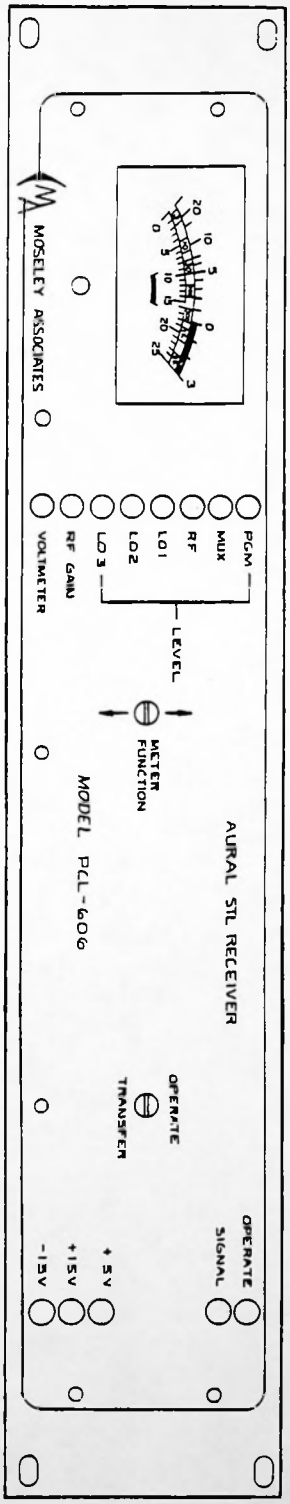

Figure 1-2

Receiver Front Panel

The PGM LEVEL, MUX 1 LEVEL, and MUX 2 LEVEL controls are used to establish the nominal levels for program and multiplex inputs. If the user's voltages are not the factory-established standard of 3.5 volts peak-to-peak for program material or 1.5 volts peak-to-peak for each multiplex input, then these adjustments may be used to compensate for the difference. When a steady-state reference level at 400 Hz is applied at the normal station program inputs (i.e., before limiting and stereo generation) and with PGM LEVEL selected on the front panel, adjust the PGM LEVEL control to indicate 0 dB on the transmitter meter when the station program level meters indicate 100% modulation and/or 0 dB.

Applying one subcarrier at a time (the other subcarrier disabled) with the MUX LEVEL meter function selected on the front panel, adjust the corresponding MUX level control to indicate the deviation of the main carrier by the subcarrier, nominally 5 kHz for the 100 kHz subcarrier and 7.5 kHz for the 185 kHz subcarrier. When both subcarriers are applied, the meter indicates the total main carrier deviation of 12.5 kHz. NOTE that the meter indicates the subcarrier level and not the modulation on the subcarrier.

1.4.5 Receiver Operational Adjustments

Four operational adjustments are accessible through the top cover of the Receiver. These adjustments are normally made at the time of installation to tailor the PCL-606 Receiver to the user's environment. The locations of the adjustments are identified on the receiver cover.

The BASEBAND LEVEL control establishes the output level of the composite signal from the Receiver. It has a nominal value of 3.5 volts peak-to-peak for 100% modulation when shipped from the factory. NOTE: The BASEBAND LEVEL control affects the MUX as well as the composite output level; therefore, if it is changed, a corresponding change in the MUX LEVEL control will be necessary to bring the MUX levels into line.

The MUX LEVEL control establishes the output voltage of all subcarrier outputs. It is initially set at 1.5 volts peak-to-peak for a subcarrier that deviates the main carrier 5 kHz (110 kHz MUX channel 1), and approximately 2.25 V p-p for a subcarrier that deviates the main carrier 7.5 kHz (185 kHz MUX channel 2). This control has no effect on the composite output level.

The MUTE THRESHOLD control establishes the RF signal level below which the Receiver becomes muted. This control is factory set at the RF signal level that produces approximately a 45 dB demodulated stereo SNR. A counterclockwise rotation of this control decreases the threshold voltage. In the fully counterclockwise direction, the Receiver in most cases will not mute in the absence of a signal.

The RF GAIN adjustment is a control designed to optimize the SNR of the Receiver by minimizing the effects of RF intermodulation distortion. There are two distinct cases where this control should be used. This first is where the receiver RF signal exceeds 1500 microvolts. The RF GAIN control should be adjusted so that the receiver signal is approximately 1500 microvolts as indicated by the front panel meter.

The second case where the RF GAIN control is valuable is when a number of other signals in the band exceed the desired signal. To achieve optimum results, establish a 400 Hz reference level from a demodulated stereo channel on an audio analyzer, and then remove the modulation. Use the RF GAIN adjustment to reduce the RF input while observing the resulting noise on the audio analyzer. If any interference is being caused by other signals, the SNR will improve until the signal is reduced to a point where the lack of on-channel signal begins to contribute more to the noise. Adjust for a peak in SNR.

Figure 1-3 depicts the basic shape of the SNR curve with and without high-level signals in the band. It should be emphasized that it is not necessarily only high-level adjacent channels that can cause interference. There are many combinations of signals that can give rise to intermodulation distortion, which will cause the resultant product to fall within the desired passband.

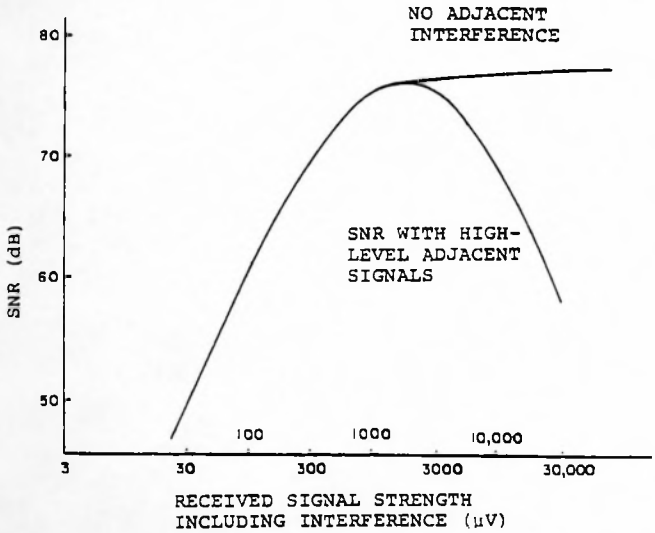

Figure 1-3

Typical SNR Curves

SECTION 2

SYSTEM DESCRIPTIVE INFORMATION

2.1 TRANSMITTER

Block and Level 92D1257
Schematic 91D7297
Assembly 21D2757

The PCL-606/C transmitter is a high-fidelity broadband FM transmitter operating in the 950 MHz STL band with a power output of 5 to 8 watts. It is capable of transmitting the composite stereo signal and two multiplex subcarriers with little degradation of signal quality over one link. The linearity and FM noise characteristics of the direct FM oscillator are exceptional, The transmitter is modular in construction and operation, and the system description given below follows the signal flow through the various modules.

Composite Audio Processor

Three signal inputs are provided to the Composite Audio Processor module: one composite signal and two multiplex signals. The composite input is 3.5 volts peak-to-peak and the input impedance is 5.7 kilohms. The multiplex inputs are 1.5 volts peak-to-peak. Level adjustments are provided for all three signals, which are then fed to summing amplifiers. They are combined into a single signal and passed to the FMO Synthesizer module.

FMO Synthesizer

The composite signal (Stereo Comppsite plus MUX) is used to modulate the frequency modulated oscillator (FMO) in the FMO Synthesizer module. The FMO is a 60-80 MHz ultralinear, very low noise. This oscillator is phase locked to a crystal-controlled reference oscillator; the phase lock loop contains the frequency programming switches which allow the synthesizer to be changed in frequency by 10 kHz increments. The RF output of the 60-80 MHz FMO then goes through a low pass filter to attenuate any harmonics. With 100% composite stereo modulation, the RF signal will deviate ±50 kHz from the chosen center frequency. The output power at this point is approximately 2 milliwatts.

950 MHz Up Converter

To preserve the low noise and low distortion characteristics of the FMO, the traditional method of multiplying up to 950 MHz was avoided. Instead, a scheme was chosen consisting of a single up-conversion utilizing a high-side local oscillator operating at 1020 MHz. This process takes place in the Up Converter Module. The signal from the FMO enters one port of the double balanced mixer; the signal from the first LO multiplier at 1020 MHz enters the module through a bandpass filter to attenuate any harmonics and then enters the LO port of the double balanced mixer. The output of the mixer contains both the sum and difference frequencies of the two input signals. The frequency required is the lower product at approximately 950 MHz. This is selected by the 950 MHz bandpass filter, which eliminates all other mixer products. The output level at this point is approximately 10 dBm. The signal is then fed to the intermediate power amplifier (IPA), which has about 30 dB of gain; this raises the level of the signal sufficiently to drive the final RF amplifier.

The output frequency of the Up Converter is controlled by the frequency set by the FMO synthesizer. This can be set in 10 kHz steps from 60-80 MHz. The lower product of the 60-80 MHz signal mixed with the fixed 1020 MHz output of the first LO multipler determines the frequency at the output of the Up Converter module, yielding a frequency range between 940-960 MHz.

First Local Oscillator and Multiplier

The First Local Oscillator and Multiplier module contains a 51 MHz overtone crystal oscillator, which is then buffered. The crystal itself is temperature controlled in a 65°C oven to maintain the frequency of this module to ±2 parts per million over the operating temperature range. The output of the buffer amplifier is fed to the multiplier chain, which consists of two stages of frequency doublers and a step-recovery diode multiplier with a multiplication factor of 5. This provides an overall multiplication factor of 20. The output of the step-recovery diode multiplier is filtered through a bandpass filter to select the desired frequency of 1020 MHz. The output power of this module is approximately +7 dBm, which is fed to the Up Converter module.

RF Amplifier

The RF Amplifier module consists of four stages of tuned amplifiers, which take the 100 mW input signal and raise it to the nominal 8-watt transmitter output. The output of the RF amplifier is passed through a low pass filter to attenuate all higher order harmonics to a level of at least-60 dBc. The output circuit contains two directional couplers with detectors that provide an indication of the forward and reflected power of the RF amplifier.

Transmitter Control

The Transmitter Control board has several functions. One of these is to sense the output of the FMO Synthesizer module. If this module goes out of lock, then the radiate control logic circuit in the Transmitter Control board provides a signal to the power supply to turn off the 12.5 volt power to the IPA and RF amplifier, causing the transmitter to stop radiating. This board contains a differential amplifier stage, which senses the voltage drop across a current sampling resistor in the RF amplifier to give a front panel meter indication of final amplifier current. This board also contains the buffer amplifiers for sending the forward power and AFC signals to the rear panel remote sampling connector.

Metering and Status

The Metering and Status board is used to monitor forward power, reflected power, program level, MUX level, AFC level, intermediate power amplifier output level, and RF amplifier output-stage current. These functions are selected via the front panel METER FUNCTION switch. The signals are routed through a multiplex IC to an absolute-value peak sampling amplifier, which drives the analog meter after the signal has been processed by a meter ballistics compensator to give the meter an extremely rapid rise time. This module also contains two bicolor red-green light emitting diodes (LEDs), which are the front panel indicators for RADIATE and AFC LOCK status. Also included are four green LEDs to indicate the presence of +15 V, -15 V, +5 V, and +12 V from the Power Supply module.

Power Supply

The Transmitter Power Supply module converts any of four ac input voltages (100, 120, 220, or 240 Vac) into the one unregulated and four regulated dc voltages required for the operation of the transmitter. The +12.5 V, 2.5 A output has a digital enable which allows the Transmitter Control board in conjunction with the FMO Synthesizer to shut the Transmitter down during the periods of loss of AFC lock on the FM oscillator. The other outputs are +15 V and -15 V at 250 mA and +5 V at 250 mA. This module also provides an unregulated 9 V supply, which is used to heat the crystal oven in the first local oscilaltor.

2.2 RECEIVER

Block and Level 92D1259
Schematic 91D7296
Assembly 21D2739

The PCL-606/C Receiver is a high-fidelity composite FM receiver operating in the 950 MHz STL band with an input sensitivity of less than 150 microvolts for 60 dB stereo demodulated SNR. It is capable of receiving the composite stereo signal and two multiplex subcarriers with little degradation of signal quality over one link. The high dynamic range, selectivity, and low noise characteristics of the receiver are exceptional. The receiver is modular in construction and operation, and the system description below follows the signal flow through the various modules.

Preselector Filter

The antenna input signal is first passed through the Preselector Filter module, which is a five-pole interdigital (comb-line) bandpass filter with very low insertion loss. This filter attenuates energy that would be fed to the preamplifier and first mixer at the image frequency and also ensures that any high-level, out-of-band signals, will not block the subsequent amplifier stages.

Preamplifier and First Mixer

The output of the preselector filter is fed to the 950 MHz Preamplifier and First Mixer module. This module establishes the quieting characteristics of the Receiver. Typical receiver performance is shown in Figure 2-1.

The input signal is first passed through the PIN diode attenuator, which allows the user to adjust the RF signal levels for optimum output signal-to-noise ratio. The signal is then split by a 3-dB 90° hybrid coupler and amplified by two low-noise amplifiers. It is recombined by a similar coupler and then passed through an image noise filter to the first double balanced mixer.

The couplers and double amplfiers provide a very high dynamic range preamplifier to minimize overload problems in high-density RF environments. High-side injection is used for the first local oscillator signal into the double balanced mixer at about 1020 MHz. The output at 70 MHz is amplified by the first IF amplifier, which is a low-noise, field-effect amplifier with high dynamic range. The signal is passed through a 70 MHz matching network to the 50 ohm output port of the Preamplifier and First Mixer module.

First Local Oscillator and Multiplier

The First Local Oscillator and Multiplier module contains an oven-controlled overtone crystal oscillator. The oscillator signal is buffered and passed through two stages of doubling. The output signal is then passed through a step-recovery diode multiplier, where it is multiplied by 5. At this point the overall multiplication is 20. The output signal is selected by taking the output of the step-recovery diode multiplier and passing it through the 1020 MHz bandpass filter. This signal, whose level is at about +7 dBm, is fed to the Preamplifier and First Mixer module.

Double Converter

The signal is then fed to the Double Converter module, which establishes the selectivity characteristics of the Receiver. A plot of the typical selectivity (narrow IF mode) is shown in Figure 2-2.

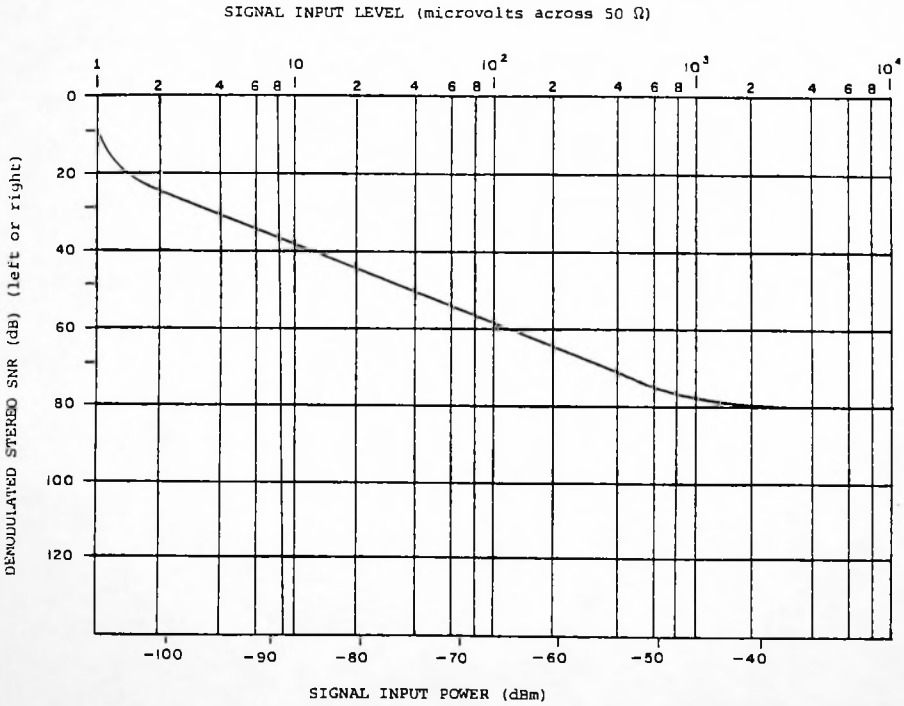

Figure 2-1

Typical Stereo Quieting Characteristics of PCL-606/C Receiver

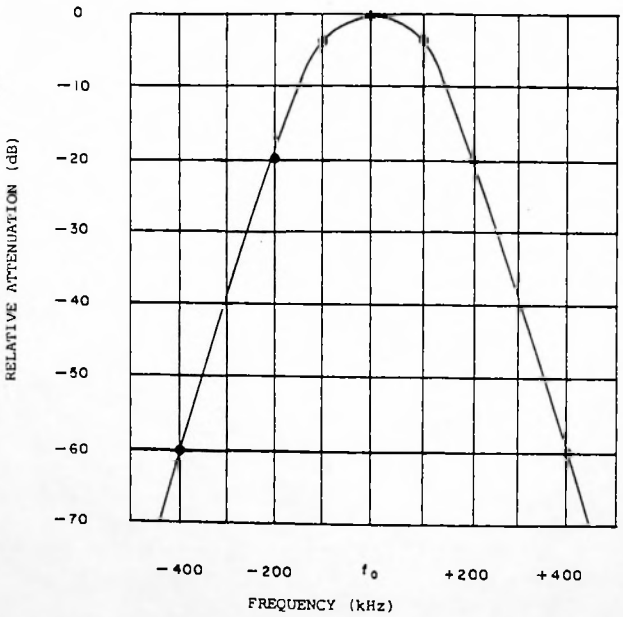

Figure 2-2

Typical Selectivity Characteristics of PCL-606/C Receiver - Narrow IF Mode

The input signal is converted from 70 MHz to 3 MHz in two stages. It passes to the second 70 MHz IF amplifier and a fourth-order 70 MHz bandpass filter. From there it enters the input of the second double balanced mixer, where it is mixed with the 80.7 MHz second local oscillator signal. The output of this mixer then feeds the 10.7 MHz IF amplifier, which consists of three amplifier stages and two ceramic phase-linear bandpass filters. The second of these two filters is switch-selectable to allow the user to minimize distortion in those situations where the added selectivity is not necessary.

The output of the second filter is amplified and passed on to the third double balanced mixer, which uses the third LO signal at 13.7 MHz. The output of this mixer is then bandpass filtered through a phase-linear 3 MHz network and passed on to the FM Demodulator module.

Second and Third Local Oscillator

The Second and Third Local Oscillator module provides two local oscillator signals to the Double Converter module. The second local oscillator consists of a fundamental crystal oscillator operating at 20.175 MHz. The LO signal is buffered and then multiplied (by four) using two push-push doublers. The output is bandpass filtered for purity and sent to the second double balanced mixer. The frequency of the second local oscillator is adjustable by about ±20 kHz; this is used to center the 10.7 MHz IF signal in the middle of the bandpass characteristics of the ceramic IF filters in the Double Converter module. The output level of the second local oscillator is approximately +7 dBm.

The third local oscillator consists of a 13.7 MHz fundamental crystal-controlled oscillator followed by a buffer amplifier and a 13.7 MHz low-pass filter. This signal at about +7 dBm is then fed to the third double balanced mixer in the Double Converter module.

FM Demodulator

The FM Demodulator module has three major functions. One is to extract the baseband information from the FM carrier. The second function is to generate the RF signal strength voltage that is applied to the meter in the RF LEVEL position, and the third is to establish the mute or squelch threshold of the receiver. The signal is first passed through a 3 MHz IF amplifier and a phase-linear 3 MHz bandpass filter. At this point the signal is split and sent to both the FM demodulator and the log IF amplifier.

For FM demodulation, the signal runs through a four-stage limiting IF amplifier, the output of which passes on to the ultra-linear pulse-counting FM demodulator. This demodulator is extremely wide band and adjustment free. The output of the FM demodulator is low-pass filtered and sent to a low noise baseband amplifier, which raises the signal level to a useful system level. The output is then sent to the Composite Baseband Processor module.

The signal from the 3 MHz IF bandpass filter is also sent to a four-stage logarithmic IF amplifier and amplitude detectors to generate the logarithmic signal used in the RF signal strength metering circuit. The output voltage of this circuit allows meaningful readings to be taken of RF levels over a range of 3 microvolts to about 3 millivolts. This signal is sent to the front panel metering circuit to indicate input RF level. This signal also goes to the mute comparator, where it is compared against an adjustable reference to set the mute or squelch threshold of the receiver. The comparator output is sent to the Mute and Transfer module.

Composite Baseband Processor

The main functions of the Composite Baseband Processor module are to split the composite signal into two frequency bands: 0.1 Hz to 80 kHz for composite, and 85 kHz to 200 kHz for MUX. NOTE: In the 100 kHz filter version of the PCL-606/c, the Composite band spans 0.1 Hz to 100 kHz, and the MUX passband extends from 110 kHz to 200 kHz. This module also contains the FET mute switch, which in controlled by the mute comparator output of the Mute and Transfer module. The signal is then passed through a high-frequency amplitude corrector, which compensates for the baseband high-frequency roll-off caused by the 10.7 MHz IF bandpass filters, to restore proper amplitude response to the composite baseband signal.

The signal is then fed to an audio amplifier and an 80 kHz composite low-pass filter. The output of this filter passes through an active group delay equalizer, which compensates for the group delay variations of the low-pass filter. This signal is then buffered by an output amplifier that provides 3.5 V peak-to-peak output for 100% modulation. The output of the high-frequency amplitude corrector is also passed to an 80 kHz MUX high-pass filter and then goes to the MUX amplifier. The output of this amplifier drives a 200 kHz MUX low-pass filter, which is then buffered to yield the MUX nominal output of 1.5 V peak-to-peak.

Metering and Status

The Receiver Metering and Status board measures program level, MUX level, the RF signal strength level, the output levels of the three local oscillators, and the RF gain voltage. One of these voltages or a voltage at TP1, the meter probe input, is selected through a multiplex IC switch, which is controlled by the front panel METER FUNCTION switch. The output signal is then fed to an absolute-value peak detecting amplifier and a meter ballistics compensator. After processing by the ballistics compensator to give the meter a very rapid but controlled response time, the signal is fed to the front panel meter.

This module contains the front panel LEDs. Two bicolor red-green LEDs indicate the status of operate or standby and whether or not there is adequate signal strength to overcome the receiver's preset mute threshold. There are also three green LEDs to indicate the presence of the +15 V, -15 V, and +5 V regulated supplies.

Mute and Transfer

The Mute and Transfer module provides for automatic changeover between two receivers where one is intended for hot standby service. This module contains the logic circuit to determine which of the two receivers is capable of operating. It also contains the relay which will physically disconnect the outputs of the receiver not in service. This allows the composite and MUX outputs of the two receivers to be bridged together to provide a single, switched, program line, and a single, switched MUX line. The Mute and Transfer module also contains the RFI filtering and shielding of the receiver input/output lines.

Power Supply

The Receiver Power Supply module converts one of four possible ac input voltages (100, 120, 220, or 240 Vac) to the three regulated dc voltages and one unregulated dc voltage required to operate the receiver. The regulated voltages are +15 V and -15 V at about 500m A, +5 V at 500m A, and +9 V unregulated, which is used to power the crystal oven in the first local oscillator.

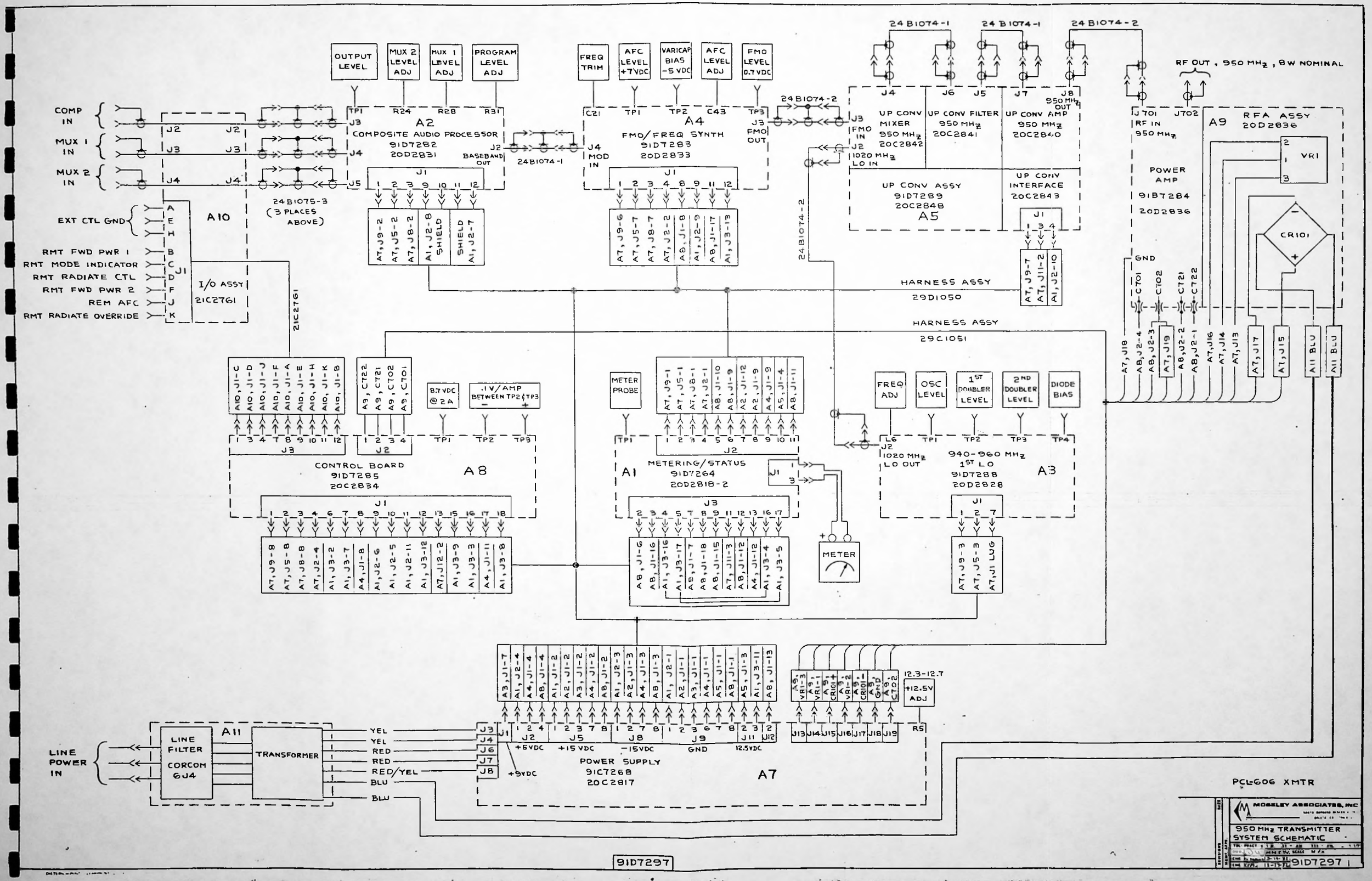
OUTPUT LEVEL
MUX 2 LEVEL ADJ
MUX 1 LEVEL ADJ
PROGRAM LEVEL ADJ
FREQ TRIM
AFC LEVEL +7VDC
VARICAP BIAS -5 VDC
AFC LEVEL ADJ
FMO LEVEL 0.7 VDC
24B1074-1
24B1074-1
24B1074-2
RF OUT, 950 MHz, 8W NOMINAL
COMP IN
MUX 1 IN
MUX 2 IN
EXT CTL GND
RMT FWD PWR 1
RMT MODE INDICATOR
RMT RADIATE CTL
RMT FWD PWR 2
REM AFC
RMT RADIATE OVERRIDE
A10
I/O ASSY
21C2761
A2
COMPOSITE AUDIO PROCESSOR
91D7282
20D2831
BASEBAND OUT
24B1075-3
(3 PLACES ABOVE)
A4
FMO/FREQ SYNTH
91D7283
20D2833
MOD IN
FMO OUT
FMO IN
1020 MHz LO IN
UP CONV MIXER
950 MHz
20C2842
UP CONV FILTER
950 MHz
20C2841
UP CONV AMP
950 MHz
20C2840
950 MHz OUT
UP CONV ASSY
91D7289
20C2848
A5
UP CONV INTERFACE
20C2843
HARNESS ASSY
29D1050
HARNESS ASSY
29C1051
J701 RF IN 950 MHz
J702
A9
RFA ASSY
20D2836
POWER AMP
91B7284
20D2836
VR1
CR101
GND
C701
C702
C721
C722
CONTROL BOARD
91D7285
20C2834
A8
METER PROBE
A1
METERING/STATUS
91D7264
20D2818-2
METER
FREQ ADJ
OSC LEVEL
1ST DOUBLER LEVEL
2ND DOUBLER LEVEL
DIODE BIAS
1020 MHz LO OUT
940-960 MHz
1ST LO
91D7288
20D2828
A3
8.7 VDC @ 2A
.1V/AMP BETWEEN TP2 & TP3
LINE POWER IN
LINE FILTER
CORCOM 6J4
A11
TRANSFORMER
YEL
YEL
RED
RED
RED/YEL
BLU
BLU
+5VDC
+15 VDC
-15VDC
GND
12.5VDC
+9VDC
POWER SUPPLY
91C7268
20C2817
A7
12.3-12.7
+12.5V ADJ
R5
PCL-606 XMTR
MOSELEY ASSOCIATES, INC
950 MHz TRANSMITTER
SYSTEM SCHEMATIC
91D7297 1
91D7297

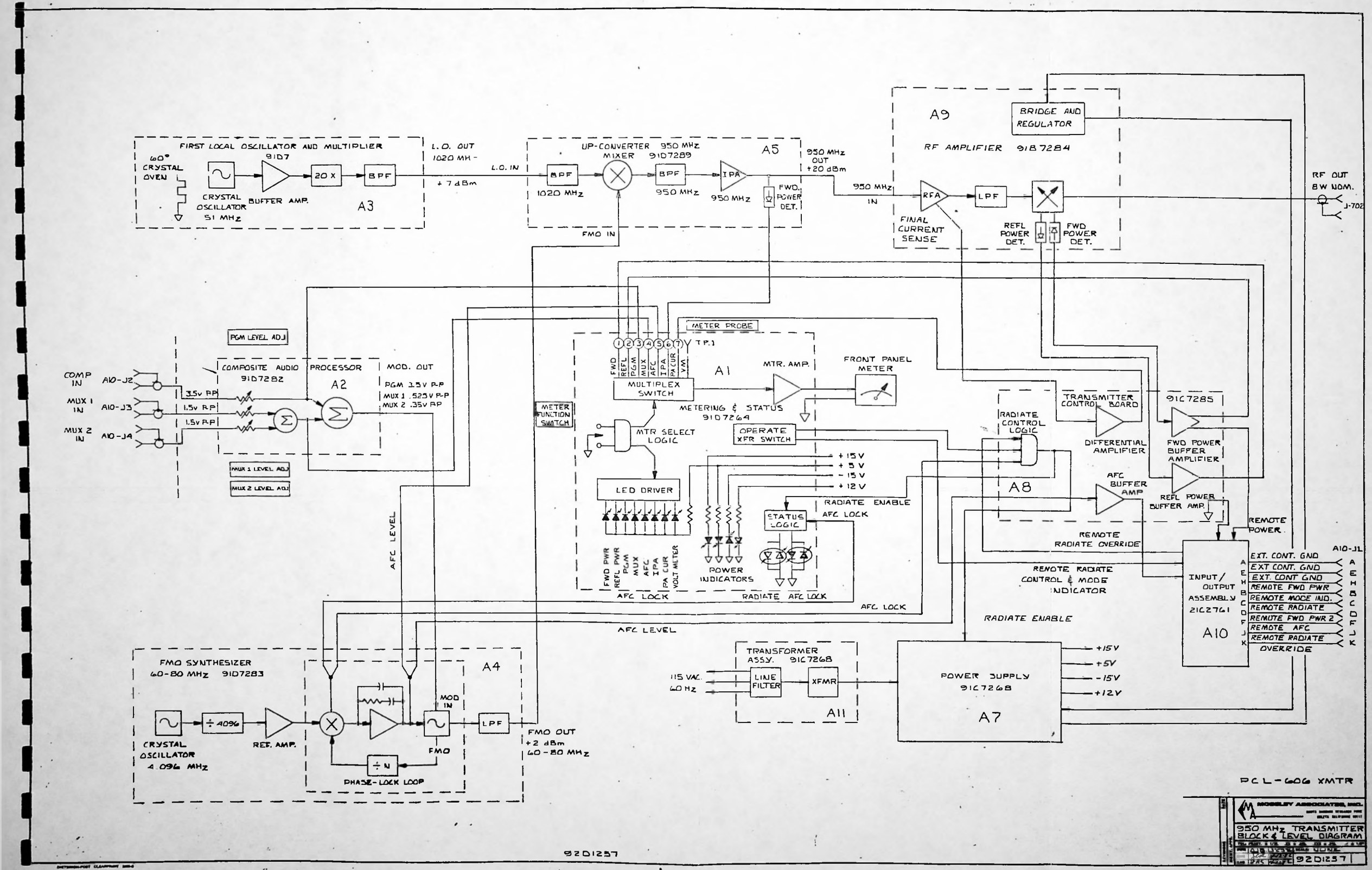
FIRST LOCAL OSCILLATOR AND MULTIPLIER
60° CRYSTAL OVEN
CRYSTAL OSCILLATOR 51 MHz
BUFFER AMP. 91D7
20 X
BPF
A3
L.O. OUT 1020 MHz
+7 dBm
L.O. IN
UP-CONVERTER MIXER 91D7289
BPF 1020 MHz
BPF 950 MHz
IPA 950 MHz
A5
FWD. POWER DET.
FMO IN
950 MHz OUT +20 dBm
A9
BRIDGE AND REGULATOR
RF AMPLIFIER 91B7284
950 MHz IN
RFA
LPF
FINAL CURRENT SENSE
REFL POWER DET.
FWD POWER DET.
RF OUT 8W NOM.
J-702
PGM LEVEL ADJ
COMP IN A10-J2
MUX 1 IN A10-J3
MUX 2 IN A10-J4
COMPOSITE AUDIO PROCESSOR 91D7282
A2
3.5v P-P
1.5v P-P
1.5v P-P
MOD. OUT
PGM 3.5V P-P
MUX 1 .525V P-P
MUX 2 .35V P-P
MUX 1 LEVEL ADJ
MUX 2 LEVEL ADJ
METER PROBE
TP.1
FWD REFL PGM MUX AFC IPA PA CUR VM
MULTIPLEX SWITCH
A1
MTR. AMP.
FRONT PANEL METER
METER FUNCTION SWITCH
METERING & STATUS 91D7264
MTR SELECT LOGIC
OPERATE XFR SWITCH
+15V
+5V
-15V
+12V
LED DRIVER
FWD PWR REFL PWR PGM MUX AFC IPA PA CUR VOLT METER
POWER INDICATORS
STATUS LOGIC
RADIATE ENABLE
AFC LOCK
AFC LOCK
RADIATE
AFC LOCK
AFC LEVEL
AFC LEVEL
RADIATE CONTROL LOGIC
A8
TRANSMITTER CONTROL BOARD
DIFFERENTIAL AMPLIFIER
91C7285
FWD POWER BUFFER AMPLIFIER
AFC BUFFER AMP
REFL POWER BUFFER AMP.
REMOTE POWER
REMOTE RADIATE OVERRIDE
REMOTE RADIATE CONTROL & MODE INDICATOR
RADIATE ENABLE
INPUT/OUTPUT ASSEMBLY 21C2761
A10
A10-J1
EXT. CONT. GND
EXT. CONT. GND
EXT. CONT. GND
REMOTE FWD PWR
REMOTE MODE IND.
REMOTE RADIATE
REMOTE FWD PWR 2
REMOTE AFC
REMOTE RADIATE OVERRIDE
FMO SYNTHESIZER 60-80 MHz 91D7283
A4
CRYSTAL OSCILLATOR 4.096 MHz
÷40%
REF. AMP.
MOD IN
FMO
LPF
FMO OUT +2 dBm 60-80 MHz
÷N
PHASE-LOCK LOOP
TRANSFORMER ASSY. 91C7268
115 VAC 60 Hz
LINE FILTER
XFMR
A11
POWER SUPPLY 91C7268
A7
+15V
+5V
-15V
+12V
PCL-606 XMTR
MOSELEY ASSOCIATES, INC.
950 MHz TRANSMITTER BLOCK & LEVEL DIAGRAM
92D1257

QTY.	STOCK NO.	MONO 1695-1715 MHZ OPTION-12	COMPOSITE 1695-1715 MHZ OPTION-11	MONO 300-330 MHZ OPTION-10	COMPOSITE 300-330 MHZ OPTION-09	MONO 440-470 MHZ OPTION-08	COMPOSITE 440-470 MHZ OPTION-07	MONO 910-920 MHZ OPTION-06	MONO 920-940 MHZ OPTION-05	MONO 940-960 MHZ OPTION-04	COMPOSITE 910-920 MHZ OPTION-03	COMPOSITE 920-940 MHZ OPTION-02	COMPOSITE 940-960 MHZ OPTION-01	REF.	DESCRIPTION	ITEM
		6&7	6&7	4&5	4&5	4&5	4&5	2&3	2&3	2&3	2&3	2&3	2&3		SHEET NUMBERS	
1			1	1	1	1	1	1	1	1	1	1	1			106
1			1	1	1	1	1	1	1	1	1	1	1		PROBE, POMONA PT-080-24-2	105
14		14		14	14	14	14	14	14	14	14	14	14		POWER CORD, CORCOM 80-1245	104
1				1		1	1	1	1	1	2032068		1		SCREW, #4-40 X 1/4" B.H.	103
		1			1		1					1	1		COVER, CHASSIS TOP 5C2913	102
															COVER, CHASSIS TOP 5C2852	101
																65
1		1	2202547												COAX ASSY., SR UP-CONV. RFA 24B1122	64
1		1	2202554												COAX ASSY., SR RFA/N 24B1123	63
1		1	2202570												COAX ASSY., SR 1ST LO/MIXER 24B1125	62
																61
																60
				1	1	1	1	9103862						(A4)	FMO/SYNTH 55-85 MHZ 20C2888	59
1		1						1	1	1	1	1	1	(A4)	FMO/SYNTH 60-80 MHZ 20C2853	58
																57
																56
				1	1	1	1	9250010						(A7)	PWR. SUPPLY & XMFR ASSY. 21C2809	55
								1	1	1	1	1	1	(A7)	PWR. SUPPLY & XMFR ASSY. 21C2788	54
1		1	9204975											(A7)	PWR. SUPPLY ASSY. 20C2817-2	53
1		1	9104423											(A11)	TRANSFORMER ASSY. 21C2835	52
																51
1		1	9104415											(A1)	FRONT PANEL ASSY. 21D2833	50
				1	1	1	1	1	1	1	1	1	1	(A1)	FRONT PANEL ASSY. 21D2758	49
																48
																47
				1	1	9104399								(A5)	UP CONVERTER ASSY. 20C2889-1	46
1		1	9104431											(A5)	UP CONVERTER ASSY. 20C2911-1	45
						1	1	9103870						(A5)	UP CONVERTER ASSY. 20C2889-2	44
								1	1	1	1	1	1	(A5)	UP CONVERTER ASSY. 20C2852	43
																42
																41
																40
1		1	9301938											(A3)	1ST LO 20D2906-2 1775 MHz	39
				1	1	1	1	9301656						(A3)	1ST LO 20D2881 330-470 MHZ	38
								1	9301532		1	9301532		(A3)	1ST LO 20D2828-3 910-920 MHZ	37
									1	9301524		1	9301524	(A3)	1ST LO 20D2828-2 920-940 MHZ	36
										1	9301276		1	(A3)	1ST LO 20D2828-1 940-960 MHZ	35
																34
1				1	1	1	1	1	1	1	9102583			(A10)	I/O ASSY. MONO 21C2777	33
		1				1	1					1	1	(A10)	I/O ASSY. COMP. 21C2761	32
																31
																30
1		1	9301961											(A9)	RFA ASSY. 20D2914-2, 1575-1715 MHZ	29
				1	1	9301672								(A9)	RFA ASSY. 20D2886, 300-330 MHZ	28
							1	9301680						(A9)	RFA ASSY. 20D2887, 440-470 MHZ	27
								1	1	1	1	1	1	(A9)	RFA ASSY. 20D2836, 950 MHZ	26
																25
		1			1		1					1	1	(A2)	COMPOSITE AUDIO PROC. 20D2831	24
1				1		1		1	1	1	9301409			(A2)	MONO AUDIO PROCESSOR 20D2865	23
																22
1		1		1	1	1	1	1	1	1		1	1		BUSHING STRIP	21
1		1		1	1	1	1	1	1	1		1	1		ANGLE LOCKING BAR 5B2864	20
2		2		2	2	2	2	2	2	2		2	2		SPACER, LOCKING 5B2857	19
18		18		18	18	18	18	18	18	18		18	18		SCREW, #4-40 X 1/4" B.H.	18
8		8		8	8	8	8	8	8	8		8	8		SCREW, #6-32 X 5/16" B.H.	17
7		7		7	7	7	7	7	7	7		7	7		SCREW, #6-32 X 3/8" BTN. HD.	16
4		4		4	4	4	4	4	4	4		4	4		WASHER, #6 CD. PL.	15
1		1		1	1	1	1	1	1	1		1	1		SHOCK MOUNT ASSY. 20C2850	14
1		1		1	1	1	1	1	1	1		1	1		L-BRACKET 5B2819	13
				1	1	1	1	1	1	1		1	1		XMTR. CTL. ASSY. 20C2834	12
1		1		1	1	1	1	1	1	1		1	1		L-BRACKET 5B2798	11
1		1	9204991											(A8)	XMTR CONTROL ASSY. 20C2916	10
																9
2		2	2202596												GROUND STRAP 24A1128	8
				1	1	1	1	2202372						9"	COAX ASSY. SMB/RT & SMB/RT 24B1074-4	7
				2	2	2	2	2	2	2	2	2	2	16"	COAX ASSY. SMB/RT & SMB/RT 24B1074-2	6
1		1	2202542											16"	COAX ASSY. SMB/RT & AMP 225532-4 24B1124	5
1		1		1	1	1	1	1	1	1	1	1	1	7"	COAX ASSY. SMB/RT & SMB/RT 24B1074-1	4
1		1		1	1	1	1	1	1	1	1	1	1		CABLE HARNESS 29D1050	3
1		1		1	1	1	1	1	1	1	1	1	1		LOCKING BAR 5B2862	2
1		1		1	1	1	1	1	1	1	1	1	1		CHASSIS 5D2794	1
*	9504010	*	9503962	*	9503756	*	9503699	*	9503749	*	9503707	*	9503632	*	9503624	*	9502782	*	9503616	*	9503608	*	9503087		XMTR. ASSEMBLY 21D2757	*

MOSELEY ASSOCIATES, INC.

XMTR ASSY., PCL-606

21D2757 S

PRINT PHANTOM ITEMS
PRINT COMPONENTS
PRINT PHANTOM/COMPONENT COMMENTS

PARENT ITEM 9550013 CROSS REF ITEM DESCRIPTION FINAL ASSY 606 TX COMP 940-960 ENGR DRAW 2102757-01 S BATCH QTY 1 ITEM TYPE 0 UNIT MEAS EA LOW LEVEL 01 PLANNER 440

BOM ITEM	LL CD	COMPONENT & CROSS REF.	DESCRIPTION & COMMENT	ENGINEERING DRAWING NUMBER		QUANTITY PER	UM	ITEM TYP	OPT NBR	FIRST OP SEQ	LT ADJ	EFFECTIVE DATES FROM	TO
100	02	9503067	PCL-606/C TRANS 940-960 MHZ	2102757-01	S	1.000	EA	1					
101	02	2032027	COVER PCL606 TX	U5C2852	E	1.000	EA	2					
103	05	1050129	SCR PNHD PHPS 4/40 X 1/4 SST	PAN HEAD		14.000	EA	4					
104	05	3370038	CORD,LINE	80-1245		1.000	EA	4					
105	02	1612324	PROBE, PT 080-24-2	PT 080-24-2		1.000	EA	4					
106	02	1250950	CHASSIS SLIDES	C-300-S-1-14		.000	PR	4					

PRINT PHANTOM ITEMS
PRINT COMPONENTS
PRINT PHANTOM/COMPONENT COMMENTS

PARENT ITEM 9503087 | CROSS REF ITEM | DESCRIPTION PCL-606/C TRANS 940-960 MHZ ENGR DRAW 21D2757-01 S | BATCH QTY 1 | ITEM TYPE 1 UNIT MEAS EA | LOW LEVEL 02. PLANNER 440

BOM ITEM	LL CD	COMPONENT & CROSS REF.	DESCRIPTION & COMMENT	ENGINEERING DRAWING NUMBER		QUANTITY PER	UM	ITEM TYP	OPT NBR	FIRST OP SEQ	LT ADJ	EFFECTIVE DATES FROM	TO
1	03	2031920	CHASSIS PCL-606 TX	05D2794	G	1.000	EA	2					
2	03	2062768	LOCKING BAR TX	05B2862	A0	1.000	EA	9					
3	03	2350601	CA HARN PCL-606 TX	29D1050	G	1.000	EA	1					
4	04	2201978	CA ASSY SMB/RT-SMB/RT 7"	24B1074-1	A0	1.000	EA	9					
6	04	2202000	CA ASSY SMB/RT SMB/RT 16"	24B1074-2	A0	2.000	EA	9					
11	03	2062552	L-BRACKET PWR SUPPLY PCL-606TX	05B2798	A0	1.000	EA	2					
12	03	9204215	XMTR CONTROL ASSY	20C2834	E	1.000	EA	1					
13	03	2062560	L-BRACKET, XMTR CONTROL 606TX	05B2819	A1	1.000	EA	2					
14	03	9103185	SHOCK MOUNT ASSY PCL-606 XMTR	20C2850 A1		1.000	EA	1				4/02/82	
15	05	1090604	WSHR FL #6 CD PL SM PATT	AN960-6 CAD 1		4.000	EA	4					
16	03	1090315	SCR BTNHD SKT CAP6/32 X3/8	BUTTON HEAD		7.000	EA	4					
17	05	1090190	SCR PNHD PHPS 6/32 X 5/16 SST	BINDER HEAD		8.000	EA	4					
18	05	1050129	SCR PNHD PHPS 4/40 X 1/4 SST	PAN HEAD		18.000	EA	4					
19	03	2062743	SPACER,LOCKING BAR XMTR PCL606	05B2857	A0	2.000	EA	2					
20	03	2062776	ANGLE LOCKING BAR 2 TABS 606	05B2864	B	1.000	EA	4					
21	06	1290071	STRIP,BSHG/GRUM,.056IN,12.75LI	GS-NY052NA		1.000	EA	4					
24	03	9301318	COMP AUDIO PROCESSOR PCL-606TX	20D2831	K	1.000	EA	1					
26	03	9301334	RFA 950MHZ PCL-606	20D2836	U	1.000	EA	1					
32	03	9102492	I/O ASSY PCL-606COMPOSITE	21C2761	E	1.000	EA	1					
35	03	9301276	LO 1ST PCL-606 940-960 MHZ	20D2628-1	P	1.000	EA	1					
43	03	9103284	ASSY UP-CONVERTER, 950,PCL-606	20C2852	B	1.000	EA	1					
49	03	9102476	FRONT PANEL ASSY PCL606 TX	21D2758	D	1.000	EA	1					
54	03	9250002	POWER SUPPLY & TRANS ASSY	21C2798	A	1.000	EA	0					

PRINT PHANTOM ITEMS
PRINT COMPONENTS
PRINT PHANTOM/COMPONENT COMMENTS

PARENT ITEM CROSS REF ITEM DESCRIPTION PCL-606/M XMTR 440-470 MHZ BATCH QTY 1 ITEM TYPE 1 LOW LEVEL 02
9503749 ENGR DRAW 21D2757-08 S UNIT MEAS EA PLANNER 470

BOM ITEM	LL CO	COMPONENT & CROSS REF.	DESCRIPTION & COMMENT	ENGINEERING DRAWING NUMBER		QUANTITY PER	ITEM UM	TYP	OPT NBR	FIRST OP SEQ	LT ADJ	EFFECTIVE DATES FROM	TO
55	03	9250010	P.S. & TRANSFORMER ASSY 450MHZ	21C2809	A	1.000	EA	1					
59	03	9103862	FMO/SYNTH ASSY 55-85 MHZ	21C2888	A	1.000	EA	1					

PRINT PHANTOM ITEMS
PRINT COMPONENTS
PRINT PHANTOM/COMPONENT COMMENTS

PARENT ITEM CROSS REF ITEM DESCRIPTION FINAL ASSY 606 TX COMP 920-940 BATCH QTY 1 ITEM TYPE 0 LOW LEVEL 01
9550062 ENGR DRAW 2102757-02 S UNIT MEAS EA PLANNER 440

BOM ITEM	LL CO	COMPONENT & CROSS REF.	DESCRIPTION & COMMENT	ENGINEERING DRAWING NUMBER		QUANTITY PER	UM	ITEM TYP	OPT NBR	FIRST OP SEQ	LT ADJ	EFFECTIVE DATES FROM	TO
100	02	9503608	PCL-606/C TRANS 920-940 MHZ	2102757-2	S	1.000	EA	1					
101	02	2032027	COVER PCL606 TX	05C2852	E	1.000	EA	2					
103	05	1050129	SCR PNHD PHPS 4/40 X 1/4 SST	PAN HEAD		14.000	EA	4					
104	05	3370038	CORD.LINE	80-1245		1.000	EA	4					
105	02	1612324	PROBE, PT 080-24-2	PT 080-24-2		1.000	EA	4					
106	02	1250950	CHASSIS SLIDES	C-300-S-1-14		.000	PR	4					

PRINT PHANTOM ITEMS
PRINT COMPONENTS
PRINT PHANTOM/COMPONENT COMMENTS

PARENT ITEM 9503608 | CROSS REF ITEM | DESCRIPTION PCL-606/C TRANS 920-940 MHZ ENGR DRAW 21D2757-2 S | BATCH QTY 1 | ITEM TYPE 1 UNIT MEAS EA | LOW LEVEL 02 PLANNER 440

SUM ITEM	LL CO	COMPONENT & CROSS REF.	DESCRIPTION & COMMENT	ENGINEERING DRAWING NUMBER		QUANTITY PER	UM	ITEM TYP	OPT NBR	FIRST OP SEQ	LT ADJ	EFFECTIVE DATES FROM	TO
1	03	2031920	CHASSIS PCL-606 TX	050279.	G	1.000	EA	2					
2	03	2062768	LOCKING BAR TX	0582862 A0		1.000	EA	9					
3	03	2353601	CA HARN PCL-606 TX	2901050	G	1.000	EA	1					
4	04	2201978	CA ASSY SMB/RT-SMB/RT 7"	2481074-1	A0	1.000	EA	9					
6	04	2202000	CA ASSY SMB/RT SMB/RT 16"	2481074-2	A0	2.000	EA	9					
11	03	2062552	L-BRACKET PWR SUPPLY PCL-606TX	0562798	A0	1.000	EA	2					
12	03	9204215	XMTR CONTROL ASSY	20C2834	E	1.000	EA	1					
13	03	2062560	L-BRACKET, XMTR CONTROL 606TX	0582819	A1	1.000	EA	2					
14	03	9103185	SHOCK MOUNT ASSY PCL-606 XMTR	20C2850 A1		1.000	EA	1				4/02/82	
15	05	1090604	WSHR FL #6 CD PL SM PATT	AN960-6 CAD 1		4.000	EA	4					
16	03	1090315	SCR BTNHD SKT CAP6/32 X3/8	BUTTON HEAD		7.000	EA	4					
17	05	1090170	SCR PNHD PHPS 6/32 X 5/16 SST	BINDER HEAD		8.000	EA	4					
18	05	1050129	SCR PNHD PHPS 4/40 X 1/4 SST	PAN HEAD		18.000	EA	4					
19	03	2062743	SPACER,LOCKING BAR XMTR PCL606	0582857	A0	2.000	EA	2					
20	03	2062776	ANGLE LOCKING BAR 2 TABS 606	0582864	B	1.000	EA	4					
21	06	1290071	STRIP,RSHG/GROM,.056IN,12.75LI	GS-NY052NA		1.000	EA	4					
24	03	9301318	COMP AUDIO PROCESSOR PCL-606TX	20D2831	K	1.000	EA	1					
26	03	9302334	RFA 950MHZ PCL-606	20D2836	U	1.000	EA	1					
32	03	9102492	I/O ASSY PCL-606COMPOSITE	21C2761	E	1.000	EA	1					
36	03	9301524	LO IST PCL-606 920-940 MHZ	20D2828-2	P	1.000	EA	1					
43	03	9103284	ASSY UP-CONVERTER, 950,PCL-606	20C2852	B	1.000	EA	1					
49	03	9102476	FRONT PANEL ASSY PCL606 TX	21D2758	D	1.000	EA	1					
54	03	9250002	POWER SUPPLY & TRANS ASSY	21C2788	A	1.000	EA	0					

PRINT PHANTOM ITEMS
PRINT COMPONENTS
PRINT PHANTOM/COMPONENT COMMENTS

PARENT ITEM	CROSS REF ITEM	DESCRIPTION	BATCH QTY	ITEM TYPE	LOW LEVEL
9503603		PCL-606/C TRANS 920-940 MHZ ENGR DRAW 2102757-2 S	L	1 UNIT MEAS EA	02 PLANNER 440

BOM ITEM	LL CD	COMPONENT & CROSS REF.	DESCRIPTION & COMMENT	ENGINEERING DRAWING NUMBER		QUANTITY PER	ITEM UM	TYP	OPT NBR	FIRST OP SEQ	LT ADJ	EFFECTIVE DATES FROM	TO
58	03	9103292	FMO/SYNTH ASSY	2002853	D	1.000	EA	1					

PRINT PHANTOM ITEMS
PRINT COMPONENTS
PRINT PHANTOM/COMPONENT COMMENTS

PARENT ITEM 9550070 CROSS REF ITEM DESCRIPTION FINAL ASSY 606 TX COMP 910-920 ENGR DRAW 2102757-03 S BATCH QTY 1 ITEM TYPE 0 UNIT MEAS EA LOW LEVEL 01 PLANNER 440

BOM ITEM	LL CO	COMPONENT & CROSS REF.	DESCRIPTION & COMMENT	ENGINEERING DRAWING NUMBER		QUANTITY PER	UM	ITEM TYP	OPT NBR	FIRST OP SEQ	LT ADJ	EFFECTIVE DATES FROM	TO
100	02	9503616	PCL-606/C TRANS 910-920 MHZ	2102757-3	S	1.000	EA	1					
101	02	2032027	COVER PCL606 TX	0502652	E	1.000	EA	2					
103	05	1050127	SCR PNHD PHPS 4/40 X 1/4 SST	PAN HEAD		14.000	EA	4					
104	05	3370038	CORD.LINE	80-1245		1.000	EA	4					
105	02	1612324	PROBE, PT 080-24-2	PT 090-24-2		1.000	EA	4					
106	02	1250950	CHASSIS SLIDES	C-300-S-1-14		.000	PR	4					

PRINT PHANTOM ITEMS
PRINT COMPONENTS
PRINT PHANTOM/COMPONENT COMMENTS

PARENT ITEM 9503516 | CROSS REF ITEM | DESCRIPTION PCL-606/C TRANS 910-920 MHZ ENGR DRAW 2102757-3 S | BATCH QTY 1 | ITEM TYPE 1 UNIT MEAS EA | LOW LEVEL 02 PLANNER 440

FCM ITEM	LL CD	COMPONENT & CROSS REF.	DESCRIPTION & COMMENT	ENGINEERING DRAWING NUMBER		QUANTITY PER	ITEM UM	ITEM TYP	OPT NBR	FIRST OP SEQ	LT ADJ	EFFECTIVE DATES FROM	TO
1	03	2031920	CHASSIS PCL-606 TX	0502794	G	1.000	EA	2					
2	03	2062768	LOCKING BAR TX	0502862	AC	1.000	EA	9					
3	03	2350681	CA HARN PCL-606 TX	2901050	G	1.000	EA	1					
4	04	2201978	CA ASSY SMB/RT-SMB/RT 7"	2481074-1	AO	1.000	EA	9					
6	04	2202000	CA ASSY SMB/RT SMB/RT 16"	2481074-2	AO	2.000	EA	9					
11	03	2062592	L-BRACKET PWR SUPPLY PCL-606TX	0502793	AO	1.000	EA	2					
12	03	9204215	XMTR CONTROL ASSY	2002834	E	1.000	EA	1					
13	03	2062560	L-BRACKET, XMTR CONTROL 606TX	0502819	A1	1.000	EA	2					
14	03	9103185	SHOCK MOUNT ASSY PCL-606 XMTR	2002850	A1	1.000	EA	1				4/02/82	
15	05	1090604	WSHR FL #6 CD PL SM PATT	AN960-6	CAD 1	4.000	EA	4					
16	05	1090315	SCR BTNHD SKT CAP6/32 X3/8	BUTTON HEAD		7.000	EA	4					
17	05	1090190	SCR PNHD PHPS 6/32 X 5/16 SST	BINDER HEAD		8.000	EA	4					
18	05	1050129	SCR PNHD PHPS 4/40 X 1/4 SST	PAN HEAD		18.000	EA	4					
19	03	2062743	SPACER,LOCKING BAR XMTR PCL606	0502857	AO	2.000	EA	2					
20	03	2062776	ANGLE LOCKING BAR 2 TABS 606	0502864	B	1.000	EA	4					
21	06	1290071	STRIP,BSHG/GROM,.056IN.12.75LI	GS-NY052NA		1.000	EA	4					
24	03	9301318	COMP AUDIO PROCESSOR PCL-606TX	2002831	K	1.000	EA	1					
26	03	9301334	RFA 950MHZ PCL-606	2002836	U	1.000	EA	1					
32	03	9102492	I/O ASSY PCL-606COMPOSITE	21C2761	E	1.000	EA	1					
37	03	9301532	LO 1ST PCL-606 910-920 MHZ	2002828-3	P	1.000	EA	1					
43	03	9103284	ASSY UP-CONVERTER, 950,PCL-606	2002852	B	1.000	EA	1					
49	03	9102476	FRONT PANEL ASSY PCL606 TX	2102758	D	1.000	EA	1					
54	03	9250002	POWER SUPPLY & TRANS ASSY	21C2788	A	1.000	EA	0					

PRINT PHANTOM ITEMS
PRINT COMPONENTS
PRINT PHANTOM/COMPONENT COMMENTS

PARENT ITEM	CROSS REF ITEM	DESCRIPTION	BATCH QTY	ITEM TYPE	LOW LEVEL
9503616		PCL-606/C TRANS 910-920 MHZ ENGR DRAW 2102757-3 S	1	1 UNIT MEAS EA	02 PLANNER 440

BOM ITEM	LL CO	COMPONENT & CROSS REF.	DESCRIPTION & COMMENT	ENGINEERING DRAWING NUMBER		QUANTITY PER	UM	ITEM TYP	OPT NBR	FIRST OP SEQ	LT ADJ	EFFECTIVE DATES FROM	TO
58	03	9103292	FMO/SYNTH ASSY	2002853	0	1.000	EA	1					

PRINT PHANTOM ITEMS
PRINT COMPONENTS
PRINT PHANTOM/COMPONENT COMMENTS

PARENT ITEM 9550039 | CROSS REF ITEM | DESCRIPTION FINAL ASSY 606 TX MONO 940-960 ENGR DRAW 2102757-04 S | BATCH QTY 1 | ITEM TYPE 0 UNIT MEAS EA | LOW LEVEL 01 PLANNER 450

BOM ITEM	LL CD	COMPONENT & CROSS REF.	DESCRIPTION & COMMENT	ENGINEERING DRAWING NUMBER	QUANTITY PER	UM	ITEM TYP	OPT NBR	FIRST OP SEQ	LT ADJ	EFFECTIVE DATES FROM	TO
100	02	9502762	PCL-606/M TRANS 940-960 MHZ	2102757-04 S	1.000	EA	1					
102	02	2032066	COVER, CHASSIS XMTR PCL606 M	0502913 A	1.000	EA	2					
103	05	1550129	SCR PNHD PHPS 4/40 X 1/4 SST	PAN HEAD	14.000	EA	4					
104	05	3370038	CORD,LINE	90-1245	1.000	EA	4					
105	02	1612324	PROBE, PT 060-24-2	PT 080-24-2	1.000	EA	4					
106	02	1250950	CHASSIS SLIDES	C-302-S-1-14	.000	PR	4					

PRINT PHANTOM ITEMS
PRINT COMPONENTS
PRINT PHANTOM/COMPONENT COMMENTS

PARENT ITEM 9502732 CROSS REF ITEM DESCRIPTION PCL-606/M TRANS 940-960 MHZ ENGR DRAW 210275T-04 S BATCH QTY 1 ITEM TYPE 1 UNIT MEAS EA LOW LEVEL 02 PLANNER 450

BOM ITEM	LL CD	COMPONENT & CROSS REF.	DESCRIPTION & COMMENT	ENGINEERING DRAWING NUMBER		QUANTITY PER	UM	ITEM TYP	OPT NBR	FIRST OP SEQ	LT ADJ	EFFECTIVE DATES FROM	TO
1	03	2031920	CHASSIS PCL-606 TX	0502794	G	1.000	EA	2					
2	03	2062758	LOCKING BAR TX	0502852	AO	1.000	EA	9					
3	03	2350601	CA HARN PCL-606 TX	2701050	G	1.000	EA	1					
4	04	2201978	CA ASSY SMB/RT-SMB/RT 7"	2481074-1	AO	1.000	EA	9					
6	04	2202000	CA ASSY SMA/RT SMJ/RT 16"	2481074-2	AO	2.000	EA	9					
7	03	1090315	SCR BTNHD SKT CAP6/32 X3/8	BUTTON HEAD		7.000	EA	4					
11	03	2062552	L-BRACKET PWR SUPPLY PCL-606TX	0562796	AO	1.000	EA	2					
12	03	9204215	XMTR CONTROL ASSY	2002834	E	1.000	EA	1					
13	03	2062560	L-BRACKET, XMTR CONTROL 606TX	0562819	A1	1.000	EA	2					
14	03	9103185	SHOCK MOUNT ASSY PCL-606 XMTR	2002850 A1		1.000	EA	1					
15	05	1090604	WSHR FL #6 CD PL SM PATT	AN960-6 CAD I		4.000	EA	4					
17	05	1090199	SCR PNHD PHPS 6/32 X 5/16 SST	BINDER HEAD		8.000	EA	4					
18	05	1050129	SCR PNHD PHPS 4/40 X 1/4 SST	PAN HEAD		18.000	EA	4					
19	03	2062743	SPACER,LOCKING BAR XMTR PCL606	0562857	AO	2.000	EA	2					
20	03	2062776	ANGLE LOCKING BAR 2 TABS 606	0582864	B	1.000	EA	4					
21	06	1290071	STRIP,BSHG/GROM,.056IN.12.75LI	GS-NY052NA		1.000	EA	4					
23	03	9301409	MONO AUDIO PROCESSOR PCL-606	2002865	F	1.000	EA	1					
26	03	9301334	RFA 950MHZ PCL-606	2002836	U	1.000	EA	1					
33	03	9102583	I/O ASSY PCL-606M	2102777	C	1.000	EA	1					
35	03	9301275	LO 1ST PCL-606 940-960 MHZ	2002828-1	P	1.000	EA	1					
43	03	9103284	ASSY UP-CONVERTER, 950,PCL-606	2002852	B	1.000	EA	1					
49	03	9102476	FRONT PANEL ASSY PCL606 TX	2102758	D	1.000	EA	1					
54	03	9250002	POWER SUPPLY & TRANS ASSY	2102788	A	1.000	EA	0					

PRINT PHANTOM ITEMS
PRINT COMPONENTS
PRINT PHANTOM/COMPONENT COMMENTS

PARENT ITEM 9502782 | CROSS REF ITEM | DESCRIPTION PCL-606/M TRANS 940-960 MHZ ENGR DRAW 2102757-04 S | BATCH QTY 1 | ITEM TYPE 1 UNIT MEAS EA | LOW LEVEL 02 PLANNER 450

BOM ITEM	LL CD	COMPONENT & CROSS REF.	DESCRIPTION & COMMENT	ENGINEERING DRAWING NUMBER		QUANTITY PER	ITEM UM	TYP	OPT NBR	FIRST OP SEQ	LT ADJ	EFFECTIVE DATES FROM	TO
58	03	9103292	EMO/SYNTH ASSY	2002953	D	1.000	EA	1					

PRINT PHANTOM ITEMS
PRINT COMPONENTS
PRINT PHANTOM/COMPONENT COMMENTS

PARENT ITEM 9550038 CROSS REF ITEM DESCRIPTION FINAL ASSY 606 TX MONO 920-940 ENGR DRAW 2102757-05 S BATCH QTY 1 ITEM TYPE 1 UNIT MEAS EA LOW LEVEL 01 PLANNER 450

BOM ITEM	LL CD	COMPONENT & CROSS REF.	DESCRIPTION & COMMENT	ENGINEERING DRAWING NUMBER		QUANTITY PER	UM	ITEM TYP	OPT NBR	FIRST OP SEQ	LT ADJ	EFFECTIVE DATES FROM	TO
100	02	9503624	PCL 606/M TRANS 920-940 MHZ	2102757-05	S	1.000	EA	1					
102	02	2032068	COVER, CHASSIS XMTR PCL606 M	0502913	A	1.000	EA	2					
103	05	1056129	SCR PNHD PHPS 4/40 X 1/4 SST	PAN HEAD		14.000	EA	4					
104	05	3370033	CORD,LINE	80-1245		1.000	EA	4					
105	02	1612324	PROBE, PT 080-24-2	PT 080-24-2		1.000	EA	4					
106	02	1250950	CHASSIS SLIDES	C-300-S-1-14		.000	PR	4					

PRINT PHANTOM ITEMS
PRINT COMPONENTS
PRINT PHANTOM/COMPONENT COMMENTS

PARENT ITEM 9503624 CROSS REF ITEM DESCRIPTION PCL 606/M TRANS 920-940 MHZ ENGR DRAW 2102757-05 S BATCH QTY 1 ITEM TYPE 1 UNIT MEAS EA LOW LEVEL 02 PLANNER 450

SEQ ITEM	LL CD	COMPONENT & CROSS REF.	DESCRIPTION & COMMENT	ENGINEERING DRAWING NUMBER		QUANTITY PER	UM	ITEM TYP	OPT NBR	FIRST OP SEQ	LT ADJ	EFFECTIVE DATES FROM	TO
1	03	2031920	CHASSIS PCL-606 TX	0502794	G	1.000	EA	2					
2	03	2062768	LOCKING BAR TX	0582662 A0		1.000	EA	9					
3	03	2350601	CA HARN PCL-606 TX	2701050	G	1.000	EA	1					
4	04	2201978	CA ASSY SMB/RT-SMB/RT 7"	2481074-1	A0	1.000	EA	9					
6	04	2202000	CA ASSY SMB/RT SMB/RT 16"	2481074-2	A0	2.000	EA	9					
11	03	2062552	L-BRACKET PWR SUPPLY PCL-606TX	0582798	A0	1.000	EA	2					
12	03	9204215	XMTR CONTROL ASSY	2002834	E	1.000	EA	1					
13	03	2062560	L-BRACKET, XMTR CONTROL 606TX	0582817	A1	1.000	EA	2					
14	03	9103185	SHOCK MOUNT ASSY PCL-606 XMTR	2002850 A1		1.000	EA	1					
15	05	1090604	WSHR FL #6 CD PL SM PATT	AN960-6 CAD I		4.000	EA	4					
16	03	1093315	SCR BTNHD SKT CAP6/32 X3/8	BUTTON HEAD		7.000	EA	4					
17	05	1090190	SCR PNHD PHPS 6/32 X 5/16 SST	BINDER HEAD		8.000	EA	4					
18	05	1050129	SCR PNHD PHPS 4/40 X 1/4 SST	PAN HEAD		18.000	EA	4					
19	03	2062743	SPACER,LOCKING BAR XMTR PCL606	0582857	A0	2.000	EA	2					
20	03	2062776	ANGLE LOCKING BAR 2 TABS 606	0532864	B	1.000	EA	4					
21	06	1290071	STRIP,BSHG/GROM,.056IN,12.75LI	GS-NY052NA		1.000	EA	4					
23	03	9301409	MONO AUDIO PROCESSOR PCL-606	2002855	F	1.000	EA	1					
26	03	9301334	RFA 950MHZ PCL-606	2002836	U	1.000	EA	1					
33	03	9102583	I/O ASSY PCL-606M	2102777	C	1.000	EA	1					
36	03	9301524	LO 1ST PCL-606 920-940 MHZ	2002828-2	P	1.000	EA	1					
43	03	9103284	ASSY UP-CONVERTER, 950,PCL-606	2002852	B	1.000	EA	1					
49	03	9102476	FRONT PANEL ASSY PCL606 TX	2102758	D	1.000	EA	1					
54	03	9250002	POWER SUPPLY & TRANS ASSY	2102798	A	1.000	EA	0					

PRINT PHANTOM ITEMS
PRINT COMPONENTS
PRINT PHANTOM/COMPONENT COMMENTS

PARENT ITEM 9503624 | CROSS REF ITEM | DESCRIPTION PCL 606/M TRANS 920-940 MHZ ENGR DRAW 2102757-05 S | BATCH QTY 1 | ITEM TYPE 1 UNIT MEAS EA | LOW LEVEL 02 PLANNER 450

BOM ITEM	LL CD	COMPONENT & CROSS REF.	DESCRIPTION & COMMENT	ENGINEERING DRAWING NUMBER		QUANTITY PER	UM	ITEM TYP	OPT NBR	FIRST OP SEQ	LT ADJ	EFFECTIVE DATES FROM	TO
58	03	9103292	FMO/SYNTH ASSY	2002853	0	1.000	EA	I					

PRINT PHANTOM ITEMS
PRINT COMPONENTS
PRINT PHANTOM/COMPONENT COMMENTS

PARENT ITEM 9550076 CROSS REF ITEM DESCRIPTION FINAL ASSY 406 TX MONO 910-920 ENGR DRAW 2102757-06 S BATCH QTY 1 ITEM TYPE 1 UNIT MEAS EA LOW LEVEL 01 PLANNER 450

BOM ITEM	LL CO	COMPONENT & CROSS REF.	DESCRIPTION & COMMENT	ENGINEERING DRAWING NUMBER		QUANTITY PER	ITEM UM	ITEM TYP	OPT NBR	FIRST OP SEQ	LT ADJ	EFFECTIVE DATES FROM	TO
100	02	9503632	PCL-406/M TRANS 910-920 MHZ	2102757-06	S	1.000	EA	1					
102	02	2032068	COVER, CHASSIS XMTR PCL605 M	0502913	A	1.000	EA	2					
103	05	1050129	SCR PNHD PHPS 4/40 X 1/4 SST	PAN HEAD		14.000	EA	4					
104	05	3370038	CORD.LINE	80-1245		1.000	EA	4					
105	02	1512324	PROBE, PT 080-24-2	PT 080-24-2		1.000	EA	4					
106	02	1250950	CHASSIS SLIDES	C-300-S-1-14		.000	PR	4					

PRINT PHANTOM ITEMS
PRINT COMPONENTS
PRINT PHANTOM/COMPONENT COMMENTS

PARENT ITEM 9503632 CROSS REF ITEM DESCRIPTION PCL-606/M TRANS 910-920 MHZ ENGR DRAW 2102757-06 S BATCH QTY 1 ITEM TYPE 1 UNIT MEAS EA LOW LEVEL 02 PLANNER 450

BOM ITEM	LL CD	COMPONENT & CROSS REF.	DESCRIPTION & COMMENT	ENGINEERING DRAWING NUMBER		QUANTITY PER	UM	ITEM TYP	OPT NBR	FIRST OP SEQ	LT ADJ	EFFECTIVE DATES FROM	TO
1	03	2031920	CHASSIS PCL-606 TX	0502794	G	1.000	EA	2					
2	03	2062768	LOCKING BAR TX	0582852 A0		1.000	EA	9					
3	03	2356601	CA HARN PCL-606 TX	2901050	G	1.000	EA	1					
4	04	2201978	CA ASSY SMA/RT-SMB/RT 7"	2481074-1	A0	1.000	EA	9					
6	04	2202000	CA ASSY SMB/RT SMB/RT 16"	2481074-2	A0	2.000	EA	9					
11	03	2062552	L-BRACKET PWR SUPPLY PCL-606TX	0582793	A0	1.000	EA	2					
12	03	9204215	XMTR CONTROL ASSY	2002834	E	1.000	EA	1					
13	03	2062560	L-BRACKET, XMTR CONTROL 606TX	0582817	A1	1.000	EA	2					
14	03	9103185	SHOCK MOUNT ASSY PCL-606 XMTR	2002850 A1		1.000	EA	1					
15	05	1090604	WSHR FL #5 CD PL SM PATT	AN960-6 CAD 1		4.000	EA	4					
16	05	1090315	SCR BTNHD SKT CAP6/32 X3/8	BUTTON HEAD		7.000	EA	4					
17	05	1090170	SCR PNHD PHPS 6/32 X 5/16 SST	BINDER HEAD		8.000	EA	4					
18	05	1050129	SCR PNHD PHPS 4/40 X 1/4 SST	PAN HEAD		18.000	EA	4					
19	03	2062743	SPACER-LOCKING BAR XMTR PCL606	0582857	A0	2.000	EA	2					
20	03	2062776	ANGLE LOCKING BAR 2 TABS 606	0582864	B	1.000	EA	4					
21	06	1290071	STRIP,BSHG/SROM,.056IN,12.75LI	GS-NY052NA		1.000	EA	4					
23	03	9301409	MONO AUDIO PROCESSOR PCL-606	2002865	F	1.000	EA	1					
26	03	9301334	RFA 950MHZ PCL-606	2002836	U	1.000	EA	1					
33	03	9102583	I/O ASSY PCL-606M	2102777	C	1.000	EA	1					
37	03	9301532	LO TST PCL-606 910-920 MHZ	2002824-3	P	1.000	EA	1					
43	03	9103284	ASSY UP-CONVERTER, 950,PCL-606	2002852	B	1.000	EA	1					
49	03	9102476	FRONT PANEL ASSY PCL606 TX	2102758	D	1.000	EA	1					
54	03	9250002	POWER SUPPLY & TRANS ASSY	2102788	A	1.000	EA	0					

PRINT PHANTOM ITEMS
PRINT COMPONENTS
PRINT PHANTOM/COMPONENT COMMENTS

PARENT ITEM 9503632 | CROSS REF ITEM | DESCRIPTION PCL-606/M TRANS 910-920 MHZ ENGR DRAW 2102757-06 S | BATCH QTY 1 | ITEM TYPE 1 UNIT MEAS EA | LOW LEVEL 02 PLANNER 450

BOM ITEM	LL CO	COMPONENT & CROSS REF.	DESCRIPTION & COMMENT	ENGINEERING DRAWING NUMBER		QUANTITY PER	ITEM UM	TYP	OPT NBR	FIRST OP SEQ	LT ADJ	EFFECTIVE DATES FROM	TO
50	03	9103292	FMO/SYNTH ASSY	2002853	0	1.000	EA	1					

PRINT PHANTOM ITEMS
PRINT COMPONENTS
PRINT PHANTOM/COMPONENT COMMENTS

PARENT ITEM 9550153 | CROSS REF ITEM | DESCRIPTION FINAL ASSY 606 TX COMP 440-470 ENGR DRAW 21D2757-07 S | BATCH QTY 1 | ITEM TYPE 0 | UNIT MEAS EA | LOW LEVEL 01 | PLANNER 470

BOM ITEM	LL CD	COMPONENT & CROSS REF.	DESCRIPTION & COMMENT	ENGINEERING DRAWING NUMBER		QUANTITY PER	UM	ITEM TYP	OPT NBR	FIRST OP SEQ	LT ADJ	EFFECTIVE DATES FROM	TO
100	02	9503757	PCL-606/C XMTR 440-470 MHZ	21D2757-07	R	1.000	EA	1					
101	02	2032027	COVER PCL606 TX	0502392	E	1.000	EA	2					
103	05	1050129	SCR PNHD PHPS 4/40 X 1/4 SST	PAN HEAD		14.000	EA	4					
104	05	3370038	CORD.LINE	60-1245		1.000	EA	4					
105	02	1012324	PROBE, PT 060-24-2	PT 060-24-2		1.000	EA	4					
106	02	1250950	CHASSIS SLIDES	C-300-S-1-14		.000	PR	4					

PRINT PHANTOM ITEMS
PRINT COMPONENTS
PRINT PHANTOM/COMPONENT COMMENTS

PARENT ITEM 9503707 | CROSS REF ITEM | DESCRIPTION PCL-606/C XMTR 440-470 MHZ ENGR DRAW 2102757-07 R | BATCH QTY 1 | ITEM TYPE 1 UNIT MEAS EA | LOW LEVEL 02 PLANNER 470

SCM ITEM	LL CD	COMPONENT & CROSS REF.	DESCRIPTION & COMMENT	ENGINEERING DRAWING NUMBER		QUANTITY PER	UM	ITEM TYP	OPT NBR	FIRST OP SEQ	LT ADJ	EFFECTIVE DATES FROM	TO
1	03	2031920	CHASSIS PCL-606 TX	0502794	G	1.000	EA	2					
2	03	2062768	LOCKING BAR TX	0502862	A0	1.000	EA	9					
3	03	2350691	CA HARN PCL-606 TX	2901050	G	1.000	EA	1					
4	04	2201978	CA ASSY SMB/RT-SMB/RT 7"	2481074-1	A0	1.000	EA	9					
6	04	2202000	CA ASSY SMB/RT SMB/RT 16"	2481074-2	A0	2.000	EA	9					
7	03	2202372	COAX ASSY SMB/RT-SMB/RT 9"	2481074-4	A0	1.000	EA	9					
11	03	2062552	L-BRACKET PWR SUPPLY PCL-606TX	0502798	A0	1.000	EA	2					
12	03	9274215	XMTR CONTROL ASSY	2002834	E	1.000	EA	1					
13	03	2062560	L-BRACKET, XMTR CONTROL 606TX	0502819	A1	1.000	EA	2					
14	03	9103185	SHOCK MOUNT ASSY PCL-606 XMTR	2002850	A1	1.000	EA	1					
15	05	1090604	WSHR FL #6 CD PL SM PATT	AN960-6	CAD 1	4.000	EA	4					
16	03	1090315	SCR BTNHD SKT CAP6/32 X3/8	BUTTON HEAD		7.000	EA	4					
17	05	1090190	SCR PNHD PHPS 6/32 X 5/16 SST	BINDER HEAD		8.000	EA	4					
18	05	1050129	SCR PNHD PHPS 4/40 X 1/4 SST	PAN HEAD		18.000	EA	4					
19	03	2062743	SPACER,LOCKING BAR XMTR PCL606	0502857	A0	2.000	EA	2					
20	03	2062776	ANGLE LOCKING BAR 2 TABS 606	0502864	B	1.000	EA	4					
21	06	1290071	STRIP,BSHG/GROM,.056IN,12.75LI	GS-NY052NA		1.000	EA	4					
24	03	9301318	COMP AUDIO PROCESSOR PCL-606TX	2002831	K	1.000	EA	1					
27	03	9301680	RFA 450 MHZ ASSY PCL-606 XMTR	2002887	E	1.000	EA	1					
32	03	9102492	I/O ASSY PCL-606COMPOSITE	2102761	E	1.000	EA	1					
38	03	9301656	1ST LO 300-480 MHZ PCL-606	2002881	D	1.000	EA	1					
44	03	9103870	ASSY UPCONV PCL-606 440-470MHZ	2002889-2		1.000	EA	1					
49	03	9102476	FRONT PANEL ASSY PCL606 TX	2102758	D	1.000	EA	1					

PRINT PHANTOM ITEMS
PRINT COMPONENTS
PRINT PHANTOM/COMPONENT COMMENTS

PARENT ITEM 9503707 | CROSS REF ITEM | DESCRIPTION PCL-606/C XMTR 440-470 MHZ ENGR DRAW 21D2757-07 R | BATCH QTY 1 | ITEM TYPE 1 UNIT MEAS EA | LOW LEVEL 02 PLANNER 470

BOM ITEM	LL CO	COMPONENT & CROSS REF.	DESCRIPTION & COMMENT	ENGINEERING DRAWING NUMBER		QUANTITY PER	UM	ITEM TYP	OPT NBR	FIRST OP SEQ	LT ADJ	EFFECTIVE DATES FROM	TO
55	03	9250010	P.S. & TRANSFORMER ASSY 450MHZ	21C2807	A	1.000	EA	1					
59	03	9103462	FMD/SYNTH ASSY 55-85 MHZ	20C2883	A	1.000	EA	1					

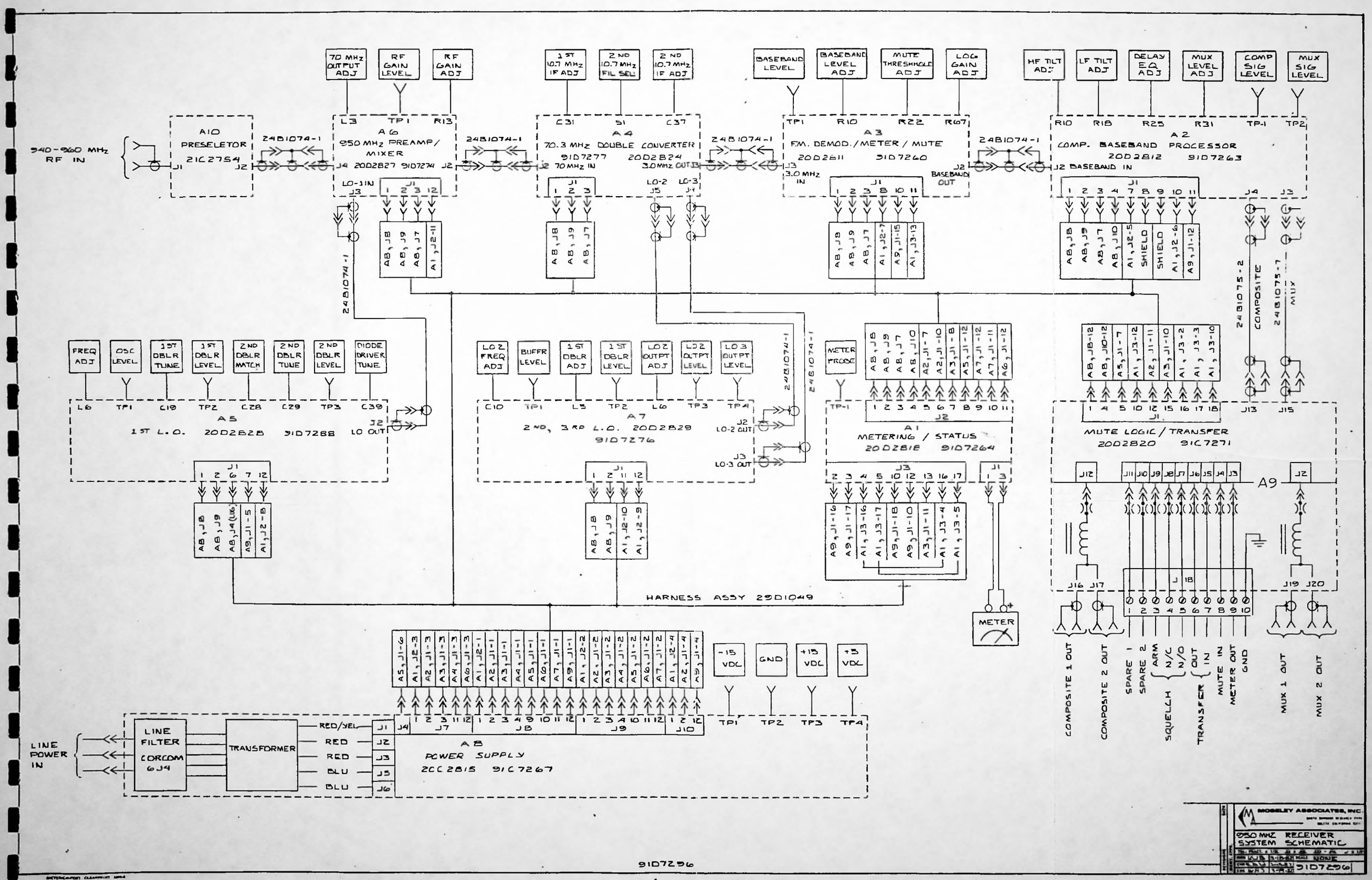
940-960 MHz RF IN
A10 PRESELECTOR 21C2754
A6 950 MHz PREAMP/MIXER 20D2827 91D7274
70 MHz OUTPUT ADJ
RF GAIN LEVEL
RF GAIN ADJ
A4 70.3 MHz DOUBLE CONVERTER 91D7277 20D2824
1ST 10.7 MHz IF ADJ
2ND 10.7 MHz FIL SEL
2ND 10.7 MHz IF ADJ
A3 F.M. DEMOD./METER/MUTE 20D2811 91D7260
BASEBAND LEVEL
BASEBAND LEVEL ADJ
MUTE THRESHOLD ADJ
LOG GAIN ADJ
A2 COMP. BASEBAND PROCESSOR 20D2812 91D7263
HF TILT ADJ
LF TILT ADJ
DELAY EQ ADJ
MUX LEVEL ADJ
COMP SIG LEVEL
MUX SIG LEVEL
FREQ ADJ
OSC LEVEL
1ST DBLR TUNE
1ST DBLR LEVEL
2ND DBLR MATCH
2ND DBLR TUNE
2ND DBLR LEVEL
DIODE DRIVER TUNE
A5 1ST L.O. 20D2828 91D7288
LO OUT
LO2 FREQ ADJ
BUFFR LEVEL
1ST DBLR ADJ
1ST DBLR LEVEL
LO2 OUTPT ADJ
LO2 OUTPT LEVEL
LO3 OUTPT LEVEL
A7 2ND, 3RD L.O. 20D2829 91D7276
LO-2 OUT
LO-3 OUT
METER PROBE
A1 METERING / STATUS 20D2818 91D7264
COMPOSITE
MUX
MUTE LOGIC / TRANSFER 20D2820 91C7271
A9
HARNESS ASSY 29D1049
METER
-15 VDC
GND
+15 VDC
+5 VDC
LINE POWER IN
LINE FILTER CORCOM 6J4
TRANSFORMER
RED/YEL
RED
RED
BLU
BLU
A8 POWER SUPPLY 20C2815 91C7267
COMPOSITE 1 OUT
COMPOSITE 2 OUT
SPARE 1
SPARE 2
ARM
N/C
N/O
SQUELCH
OUT
IN
TRANSFER
MUTE IN
METER OUT
GND
MUX 1 OUT
MUX 2 OUT
MODELEY ASSOCIATES, INC.
950 MHZ RECEIVER SYSTEM SCHEMATIC
NONE
91D7296

91D7296

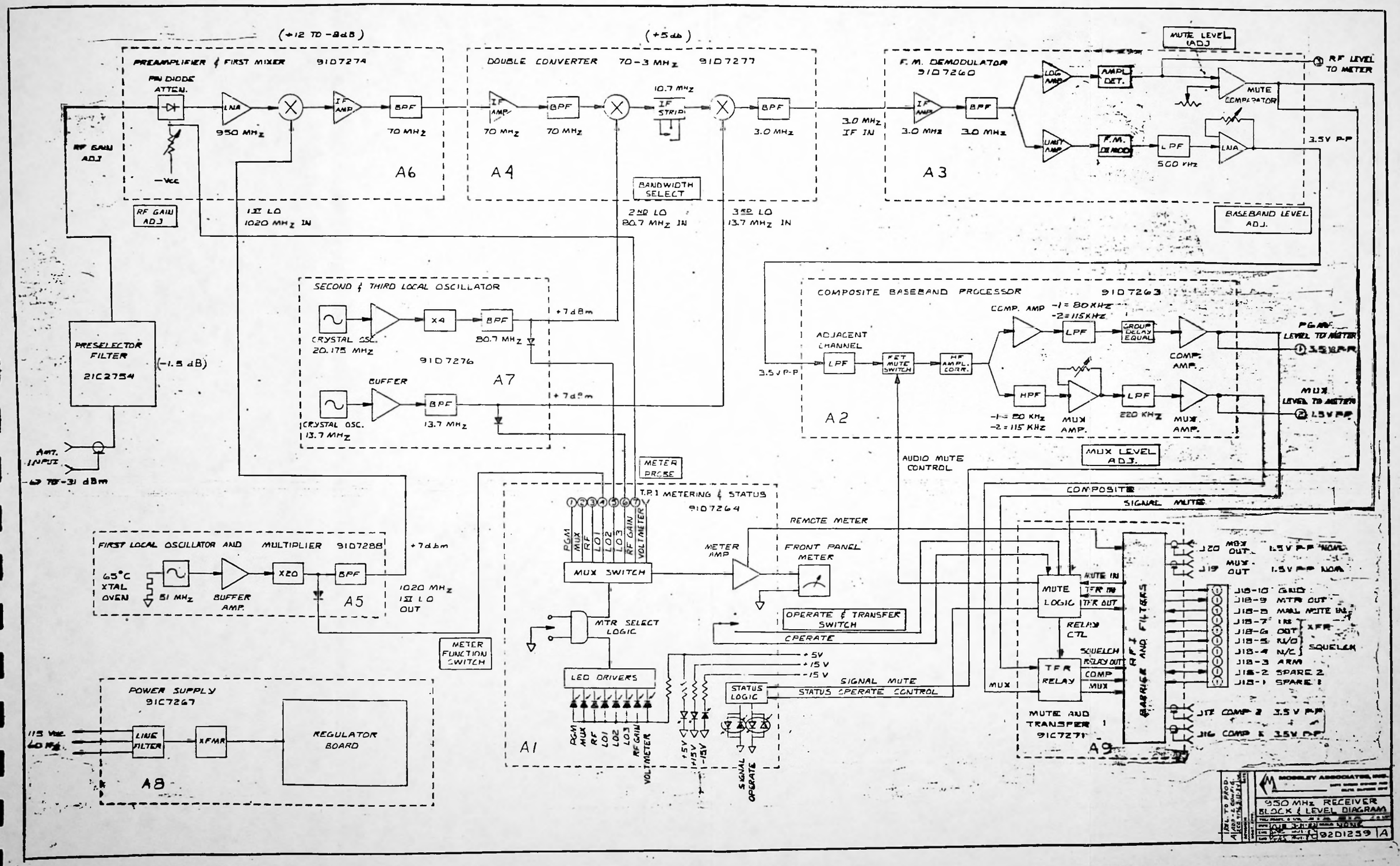
(+12 TO -8dB)
PREAMPLIFIER & FIRST MIXER 91D7274
PIN DIODE ATTEN.
LNA
950 MHz
IF AMP.
BPF
70 MHz
RF GAIN ADJ
-Vcc
A6
1ST LO 1020 MHz IN
(+5db)
DOUBLE CONVERTER 70-3 MHz 91D7277
IF AMP
70 MHz
BPF
70 MHz
10.7 MHz IF STRIP
BPF
3.0 MHz
A4
BANDWIDTH SELECT
2ND LO 80.7 MHz IN
3RD LO 13.7 MHz IN
3.0 MHz IF IN
F.M. DEMODULATOR 91D7260
IF AMP
3.0 MHz
BPF
3.0 MHz
LOG AMP
AMPL DET.
MUTE LEVEL ADJ
MUTE COMPARATOR
RF LEVEL TO METER
LIMIT AMP
F.M. DEMOD
LPF
560 KHz
LNA
3.5V P-P
A3
BASEBAND LEVEL ADJ.
SECOND & THIRD LOCAL OSCILLATOR
CRYSTAL OSC. 20.175 MHz
X4
BPF
80.7 MHz
+7dBm
91D7276
A7
BUFFER
CRYSTAL OSC. 13.7 MHz
BPF
13.7 MHz
+7dBm
PRESELECTOR FILTER 21C2754
(-1.5 dB)
ANT. INPUT
-62 TO -31 dBm
COMPOSITE BASEBAND PROCESSOR 91D7263
COMP. AMP
-1 = 80 KHz
-2 = 115 KHz
LPF
GROUP DELAY EQUAL
COMP. AMP.
PGM. LEVEL TO METER
3.5V P-P
ADJACENT CHANNEL
LPF
FET MUTE SWITCH
HF AMPL. CORR.
3.5V P-P
HPF
-1 = 80 KHz
-2 = 115 KHz
MUX AMP.
LPF
220 KHz
MUX AMP.
MUX LEVEL TO METER
1.5V P-P
A2
MUX LEVEL ADJ.
AUDIO MUTE CONTROL
COMPOSITE
SIGNAL MUTE
METER PROBE
T.P.1 METERING & STATUS 91D7264
PGM
MUX
RF
LO1
LO2
LO3
RF GAIN
VOLTMETER
MUX SWITCH
REMOTE METER
METER AMP
FRONT PANEL METER
OPERATE & TRANSFER SWITCH
OPERATE
MTR SELECT LOGIC
LED DRIVERS
+5V
+15V
-15V
STATUS LOGIC
SIGNAL MUTE
STATUS OPERATE CONTROL
A1
FIRST LOCAL OSCILLATOR AND MULTIPLIER 91D7288
65°C XTAL OVEN
51 MHz
BUFFER AMP.
X20
BPF
+7dBm
1020 MHz 1ST LO OUT
A5
METER FUNCTION SWITCH
POWER SUPPLY 91C7267
115 VAC 60 Hz
LINE FILTER
XFMR
REGULATOR BOARD
A8
MUTE LOGIC
MUTE IN
TFR IN
TFR OUT
RELAY CTL
SQUELCH
RELAY OUT
COMP
MUX
TFR RELAY
MUX
MUTE AND TRANSFER 91C7271
A9
BARRIER AND FILTERS
J20 MUX OUT 1.5V P-P NOM
J19 MUX OUT 1.5V P-P NOM
J18-10 GND
J18-9 MTR OUT
J18-8 MAL MUTE IN
J18-7 IN
J18-6 OUT
J18-5 N/O
J18-4 N/C
J18-3 ARM
J18-2 SPARE 2
J18-1 SPARE 1
XFR
SQUELCH
J17 COMP 2 3.5V P-P
J16 COMP 1 3.5V P-P
MOSELEY ASSOCIATES, INC.
950 MHz RECEIVER BLOCK & LEVEL DIAGRAM
92D1259 A

QTY. STOCK NO.	MONO 1695-1715 MHz OPTION-12	COMP. 1695-1715 MHz OPTION-11	MONO 300-330 MHz OPTION-10	COMP. 300-330 MHz OPTION-09	MONO 440-470 MHz OPTION-08	COMPOSITE 440-470 MHz OPTION-07	MONO 910-920 MHz OPTION-06	MONO 920-940 MHz OPTION-05	MONO 940-960 MHz OPTION-04	COMPOSITE 910-920 MHz OPTION-03	COMPOSITE 920-940 MHz OPTION-02	COMPOSITE 940-960 MHz OPTION-01	REF	DESCRIPTION	ITEM NO.
														SHEET NUMBERS	
	1	1 9301946												1ST LO 20D2908-3 1765-1785 MHz	105
	1	1	1	1	1	1	1	1	1	1	1	1 1612324		PROBE POMONA PT-080-24-2	104
	1	1	1	1	1	1	1	1	1	1	1	1 3370038		POWER CORD CORCOM 80-1245	103
	9	9	9	9	9	9	9	9	9	9	9	9 1050129		SCREW, #4-40 X 1/4" B.H.	102
	1	1	1	1	1	1	1	1	1	1	1	1 2031805		COVER, 5C2785	101
															64
															63
															62
	1	1 2202539												COAX ASSY. SR 1ST LO/PRE-AMP 24B1121	61
	1	1 2202521												COAX ASSY. SR PRE-SEL/PRE-AMP 24B1120	60
			1	1	1	1 2202422							21"	COAX ASSY. SMB/RT & SMB/RT 24B1074-5	59
	5	5	4	4	4	4	7	7	7	7	7	7 2201978	7"	COAX ASSY. SMB/RT & SMB/RT 24B1074-1	58
															57
															56
															55
			1	1	1	1 2350668								CABLE HARNESS 29D1055	54
	1	1					1	1	1	1	1	1 2350593		CABLE HARNESS 29D1049	53
															52
															51
															50
															49
			1	1	1	1 9301656							(A5)	1ST LO 20D2881	48
							1			1 9301607			(A5)	1ST LO 20D2828-6	47
								1			1 9301599		(A5)	1ST LO 20D2828-5	46
									1			1 9301581	(A5)	1ST LO 20D2828-4	45
															44
			1	1	1	1 9301714							(A7)	65-96 MHZ 2ND LO/SYNTH-3RD LO 20D2882	43
															42
	1	1					1	1	1	1	1	1 9301243	(A7)	80.7/13.7 2ND & 3RD LO 20D2829	41
															40
			1		1 9301623								(A4)	(55-85)-3 MHZ DOUBLE CONV. 20D2884-2	39
				1		1 9301615							(A4)	(55-85)-3 MHZ DOUBLE CONV. 20D2884-1	38
	1	1 9301847											(A6)	PRE-AMP 1ST MIXER 20D2907 1.5-1.7GHz	37
							1	1	1	1	1	1 9301268	(A6)	PRE-AMP 1ST MIXER 20D2827 950 MHz	36
															35
															34
			1	1	9301805								(A6)	RF MOD ASSY., 300-330 MHz 21D2803-1	33
					1	1 9301664							(A6)	RF MOD ASSY., 440-470 MHZ 21D2803-2	32
	1	1 9104407											(A10)	PRE-SELECTOR, 21C2831-1, 1695-1715 MHz	31
							1	1	1	1	1	1 9102138	(A10)	PRE-SELECTOR, 21C2754	30
															29
	1		1		1		1	1	1 9102591				(A9)	MUTE AND TRANSFER, 21D2775	28
		1		1		1				1	1	1 9202120	(A9)	MUTE AND TRANSFER, 21D2742	27
															26
	1		1		1		1	1	1 9301417				(A2)	BASE BAND, 20D2837	25
		1		1		1				1	1	1 9301292	(A2)	BASE BAND, 20D2812-1 80 KHz	24
		REF		REF		REF				REF	REF	REF 9301912	(A2)	BASE BAND, 20D2812-2 115 KHz	23
		1								1	1	1 9301235	(A4)	70-3 MHZ DOUBLE CONV. 20D2824-1	22
	1						1	1	1 9301177				(A4)	70-3 MHZ DOUBLE CONV. 20D2824-2	21
															20
	1	1 9104068											(A8)	POWER SUPPLY 21D2823	19
			1	1	1	1	1	1	1	1	1	1 9102112	(A8)	POWER SUPPLY 21D2741	18
	1	1	1	1	1	1	1	1	1	1	1	1 9301284	(A3)	FM DEMOD, 20D2811	17
															16
	1	1	1	1	1	1	1	1	1	1	1	1 1290071		BUSHING STRIP	15
	1	1	1	1	1	1	1	1	1	1	1	1 2062784		ANGLE LOCKING BAR, 5B2865	14
	2	2	2	2	2	2	2	2	2	2	2	2 2062719		SPACER, LOCKING 5B2858	13
	6	6	6	6	6	6	6	6	6	6	6	6 1090604		WASHER, #6 CD PL	12
	14	14	14	14	14	14	14	14	14	14	14	14 1090182		SCREW, #6-32 X 1/4" B.H.	11
	7	7	7	7	7	7	7	7	7	7	7	7 1090315		SCREW, #6-32 X 5/16" BTN. HD.	10
	15	15	19	19	19	19	15	15	15	15	15	15 1050129		SCREW, #4-40 X 1/4" B.H.	9
															8
	1	1					1	1	1	1	1	1 9102070		FRONT PANEL ASSY. 21D2740	7
			1	1	1	1 9103888								FRONT PANEL ASSY. 21D2802	6
															5
			2	2	2	2 1231042								STANDOFF, 1/4" HEX, 4-40 X 1-1/4 ALUM.	4
	1	1	1	1	1	1	1	1	1	1	1	1 2062495		U-BRACKET, 5B2779	3
	1	1	1	1	1	1	1	1	1	1	1	1 2062750		LOCKING BAR, 5B2861	2
	1	1	1	1	1	1	1	1	1	1	1	1 2031847		CHASSIS, 5D2778	1
	* 9504002	* 9503954	* 9503939	* 9503947	* 9503731	* 9503715	* 9503673	* 9503665	* 9502790	* 9503657	* 9503640	* 9502774		RCVR ASSY., 21D2739	*

REV	DESCRIPTION	DATE
N	REL. FOR PROD. PER ECO 3904	
M	ADDED ITEM 33 ECO 3904	
L	ITEM 32 QUAD SHEET 1 REVISED ECO 3904 10 JAN 94	
K	DELETE ITEM 52 ECO 3904 JUL 12-93 CH	
J	REL. FOR PROD PER ECO 3850 7-1-93 CH	

MOSELEY ASSOCIATES, INC.
SANTA BARBARA RESEARCH PARK
GOLETA, CALIFORNIA 93117

RECEIVER ASSEMBLY
PCL-606

TOL. PRINT. ± 1/16 FR ± .005 .XXX ± .010 .X ± 1/32

DRN		11-25-92	SCALE —
CHK		12-14-92	
ENG		12-14-92	21D2739 N1

PRINT PHANTOM ITEMS
PRINT COMPONENTS
PRINT PHANTOM/COMPONENT COMMENTS

PARENT ITEM 9550005 CROSS REF ITEM DESCRIPTION FINAL ASSY 606 RX COMP 940-960 ENGR DRAW 21D2739-01 N BATCH QTY 1 ITEM TYPE 0 UNIT MEAS EA LOW LEVEL 01 PLANNER 440

BOM ITEM	LL CD	COMPONENT & CROSS REF.	DESCRIPTION & COMMENT	ENGINEERING DRAWING NUMBER	QUANTITY PER	UM	ITEM TYP	OPT NBR	FIRST OP SEQ	LT ADJ	EFFECTIVE DATES FROM	TO
100	02	9502774	PCL-606/C RCVR 940-960 MHZ	21D2739-01 N	1.000	EA	1					
101	02	2031805	COVER PCL-606 RCVR	05C2795 G	1.000	EA	2					
102	05	1050129	SCR PNHD PHPS 4/40 X 1/4 SST	PAN HEAD	9.000	EA	4					
103	05	3370038	*CORD.LINE	80-1245	1.000	EA	4					
104	02	1612324	PROBE, PT 080-24-2	PT 080-24-2	1.000	EA	4					
105	02	1250950	CHASSIS SLIDES	C-300-S-1-14	.000	PR	4					

PRINT PHANTOM ITEMS
PRINT COMPONENTS
PRINT PHANTOM/COMPONENT COMMENTS

PARENT ITEM 9502774 CROSS REF ITEM DESCRIPTION PCL-606/C RCVR 940-960 MHZ ENGR DRAW 2102739-01 N BATCH QTY 1 ITEM TYPE 1 UNIT MEAS EA LOW LEVEL 02 PLANNER 440

BOM ITEM	LL CD	COMPONENT & CROSS REF.	DESCRIPTION & COMMENT	ENGINEERING DRAWING NUMBER		QUANTITY PER	UM	ITEM TYP	OPT NBR	FIRST OP SEQ	LT ADJ	EFFECTIVE DATES FROM	TO
1	03	2031847	CHASSIS PCL-606 RCVR	0502778	E	1.000	EA	2					
2	03	2062750	LOCKING BAR RX	0582861	AO	1.000	EA	4					
3	03	2062495	U-BRACKET PCL-606	0582779	AO	1.000	EA	2					
7	03	9102070	FRONT PANEL ASSY PCL-606	2102740	D	1.000	EA	1					
9	05	1050129	SCR PNHD PHPS 4/40 X 1/4 SST	PAN HEAD		15.000	EA	4					
10	03	1070315	SCR BTNHD SKT CAPS/32 X3/8	BUTTON HEAD		7.000	EA	4					
11	05	1090192	SCR PNHD PHPS 6/32 X 1/4 SST	BINDER HEAD		14.000	EA	4					
12	05	1090604	WSHR FL #6 CD PL SM PATT	AN960-6 CAD 1		6.000	EA	4					
13	03	2062719	SPACER.LOCKING BAR RCVR PCL606	0582858	AO	2.000	EA	2					
14	03	2062784	ANGLE LOCKING BAR 6 TABS 606	0582865	B	1.000	EA	4					
15	06	1290071	STRIP,BSHG/GROM..056IN,12.75LI	GS-NY052NA		1.000	EA	4					
17	03	9301284	FM DEMOD PCL-606	2002811	L	1.000	EA	1					
18	03	9102112	PWR SUPPLY ASSY RCVR PCL-606	2102741	EO	1.000	EA	1					
22	03	9301235	70-3 MHZ COMP DBL CONV PCL-606	2002824-1	X1	1.000	EA	1					
23	03	9301912	ASSY, BASEBAND PROC 115KHZ 606	2002812-2	J	.000	EA	1					
24	03	9301292	ASSY, BASEBAND PROC 80KHZ 606	2002812-1	J	1.000	EA	1					
27	03	9102120	MUTE & TRANSFER ASSY PCL-606	2102742	C	1.000	EA	1					
30	03	9102138	950 MHZ PRESELECT ASSY PCL-606	2102754	A1	1.000	EA	1					
36	03	9301268	950 MHZ PREAMP/1ST MIX PCL-606	2002827	M	1.000	EA	1					
41	03	9301243	80.7/13.7 2ND/3RD LO PCL-606	2002829	J	1.000	EA	1					
45	03	9301581	LO 1ST PCL-606 940-960 MHZ RX	2002828-4	P	1.000	EA	1					
53	03	2350593	HARN ASSY PCL-606 RCVR	2901049	C	1.000	EA	1					
58	04	2201978	CA ASSY SMB/RT-SMB/RT 7"	2481074-1	AO	7.000	EA	9					

PRINT PHANTOM ITEMS
PRINT COMPONENTS
PRINT PHANTOM/COMPONENT COMMENTS

PARENT ITEM 9550104 CROSS REF ITEM DESCRIPTION FINAL ASSY 606 RX COMP 920-940 ENGR DRAW 2102739-02 N BATCH QTY 1 ITEM TYPE 0 UNIT MEAS EA LOW LEVEL 01 PLANNER 440

BOM ITEM	LL CO	COMPONENT & CROSS REF.	DESCRIPTION & COMMENT	ENGINEERING DRAWING NUMBER		QUANTITY PER	UM	ITEM TYP	OPT NBR	FIRST OP SEQ	LT ADJ	EFFECTIVE DATES FROM	TO
100	02	9503640	PCL-606/C RCVR 920-940 MHZ	2102739-02	N	1.000	EA	1					
101	02	2031805	COVER PCL-606 RCVR	0502785	G	1.000	EA	2					
102	05	1050129	SCR PNHD PHPS 4/40 X 1/4 SST	PAN HEAD		9.000	EA	4					
103	05	3370038	CORD,LINE	80-1245		1.000	EA	4					
104	02	1612324	PROBE, PT 080-24-2	PT 080-24-2		1.000	EA	4					
105	02	1250950	CHASSIS SLIDES	C-300-S-1-14		.000	PR	4					

PRINT PHANTOM ITEMS
PRINT COMPONENTS
PRINT PHANTOM/COMPONENT COMMENTS

PARENT ITEM 9503640 CROSS REF ITEM DESCRIPTION PCL-606/C RCVR 920-940 MHZ ENGR DRAW 2102739-02 N BATCH QTY 1 ITEM TYPE 1 UNIT MEAS EA LOW LEVEL 02 PLANNER 440

BOM ITEM	LL CD	COMPONENT & CROSS REF.	DESCRIPTION & COMMENT	ENGINEERING DRAWING NUMBER		QUANTITY PER	UM	ITEM TYP	OPT NBR	FIRST OP SEQ	LT ADJ	EFFECTIVE DATES FROM	TO
1	03	2031847	CHASSIS PCL-606 RCVR	0502778	E	1.000	EA	2					
2	03	2062750	LOCKING BAR RX	0582861	A0	1.000	EA	4					
3	03	2062495	U-BRACKET PCL-606	0582779	A0	1.000	EA	2					
7	03	9102070	FRONT PANEL ASSY PCL-606	2102740	D	1.000	EA	1					
9	05	1050129	SCR PNHD PHPS 4/40 X 1/4 SST	PAN HEAD		15.000	EA	4					
10	03	1090315	SCR BINHD SKT CAP6/32 X3/8	BUTTON HEAD		7.000	EA	4					
11	05	1090182	SCR PNHD PHPS 6/32 X 1/4 SST	BINDER HEAD		14.000	EA	4					
12	05	1090604	WSHR FL #6 CD PL SM PATT	AN960-6 CAD 1		5.000	EA	4					
13	03	2062719	SPACER,LOCKING BAR RCVR PCL606	0582858	A0	2.000	EA	2					
14	03	2062784	ANGLE LOCKING BAR 6 TABS 606	0582865	B	1.000	EA	4					
15	06	1290071	STRIP,BSHG/GROM,.056IN,12.75LI	GS-NY0527A		1.000	EA	4					
17	03	9301264	FM DEMOD PCL-606	2002811	L	1.000	EA	1					
18	03	9102112	PWR SUPPLY ASSY RCVR PCL-606	2102741 E0		1.000	EA	1					
22	03	9301235	70-3 MHZ COMP DBL CONV PCL-606	2002824-1	X1	1.000	EA	1					
23	03	9301912	ASSY, BASEBAND PROC 115KHZ 606	2002812-2	J	.000	EA	1					
24	03	9301292	ASSY, BASEBAND PROC 80KHZ 606	2002812-1	J	1.000	EA	1					
27	03	9102120	MUTE & TRANSFER ASSY PCL-606	2102742	C	1.000	EA	1					
30	03	9102138	950 MHZ PRESELECT ASSY PCL-606	2102754 A1		1.000	EA	1					
36	03	9301268	950 MHZ PREAMP/1ST MIX PCL-606	2002827	M	1.000	EA	1					
41	03	9301243	80.7/13.7 2ND/3RD LO PCL-606	2002829	J	1.000	EA	1					
46	03	9301599	LO 1ST PCL-606 920-940 MHZ RX	2002828-5	P	1.000	EA	1					
53	03	2350593	HARN ASSY PCL-606 RCVR	2901049	C	1.000	EA	1					
58	04	2231978	CA ASSY SMB/RT-SMB/RT 7"	2481074-1	A0	7.000	EA	9					

PRINT PHANTOM ITEMS
PRINT COMPONENTS
PRINT PHANTOM/COMPONENT COMMENTS

PARENT ITEM 9503657 CROSS REF ITEM DESCRIPTION PCL-606/C RCVR 910-920 MHZ ENGR DRAW 2102739-03 N BATCH QTY 1 ITEM TYPE 1 UNIT MEAS EA LOW LEVEL 02 PLANNER 440

BOM ITEM	LL CD	COMPONENT & CROSS REF.	DESCRIPTION & COMMENT	ENGINEERING DRAWING NUMBER		QUANTITY PER	UM	ITEM TYP	OPT NBR	FIRST OP SEQ	LT ADJ	EFFECTIVE DATES FROM	TO
1	03	2031847	CHASSIS PCL-606 RCVR	0502778	E	1.000	EA	2					
2	03	2062756	LOCKING BAR RX	0502861	AO	1.000	EA	4					
3	03	2062495	U-BRACKET PCL-606	0502779	AO	1.000	EA	2					
7	03	9102070	FRONT PANEL ASSY PCL-606	2102740	D	1.000	EA	1					
9	05	1050129	SCR PNHD PHPS 4/40 X 1/4 SST	PAN HEAD		15.000	EA	4					
10	03	1090315	SCR BTNHD SKT CAP6/32 X3/8	BUTTON HEAD		7.000	EA	4					
11	05	1090182	SCR PNHD PHPS 6/32 X 1/4 SST	BINDER HEAD		14.000	EA	4					
12	05	1090604	WSHR FL #6 CD PL SM PATT	AN960-6 CAD 1		6.000	EA	4					
13	03	2062719	SPACER,LOCKING BAR RCVR PCL606	0502858	AO	2.000	EA	2					
14	03	2062784	ANGLE LOCKING BAR 6 TABS 606	0502865	B	1.000	EA	4					
15	06	1290071	STRIP,BSHG/GROM,.056IN.12.75LI	GS-NY052NA		1.000	EA	4					
17	03	9301234	FM DEMOD PCL-606	2002811	L	1.000	EA	1					
18	03	9102112	PWR SUPPLY ASSY RCVR PCL-606	2102741	EO	1.000	EA	1					
22	03	9301235	70-3 MHZ COMP DBL CONV PCL-606	2002824-1	X1	1.000	EA	1					
23	03	9301912	ASSY, BASEBAND PROC 115KHZ 606	2002812-2	J	.000	EA	1					
24	03	9301292	ASSY, BASEBAND PROC 80KHZ 606	2002812-1	J	1.000	EA	1					
27	03	9102120	MUTE & TRANSFER ASSY PCL-606	2102742	C	1.000	EA	1					
30	03	9102138	950 MHZ PRESELECT ASSY PCL-606	2102754	A1	1.000	EA	1					
36	03	9301266	950 MHZ PREAMP/1ST MIX PCL-606	2002827	M	1.000	EA	1					
41	03	9301243	90.7/13.7 2ND/3RD LO PCL-606	2002829	J	1.000	EA	1					
47	03	9301607	LO 1ST PCL-606 910-920 MHZ RX	2002828-6	P	1.000	EA	1					
53	03	2350593	HARN ASSY PCL-606 RCVR	2901049	C	1.000	EA	1					
58	04	2291978	CA ASSY SMB/RT-SMB/RT 7"	246107+-1	AO	7.000	EA	9					

PRINT PHANTOM ITEMS
PRINT COMPONENTS
PRINT PHANTOM/COMPONENT COMMENTS

PARENT ITEM 9550112 CROSS REF ITEM DESCRIPTION FINAL ASSY 606 RX,COMP 910-920 ENGR DRAW 2102739-03 N BATCH QTY 1 ITEM TYPE 0 UNIT MEAS EA LOW LEVEL 01 PLANNER 440

BOM ITEM	LL CD	COMPONENT & CROSS REF.	DESCRIPTION & COMMENT	ENGINEERING DRAWING NUMBER		QUANTITY PER	UM	ITEM TYP	OPT NBR	FIRST OP SEQ	LT ADJ	EFFECTIVE DATES FROM	TO
100	02	9503657	PCL-506/C RCVR 910-920 MHZ	2102739-03	N	1.000	EA	1					
101	02	2031505	COVER PCL-505 RCVR	3502755	G	1.000	EA	2					
102	05	1050129	SCR PNHD PHPS 4/40 X 1/4 SST	PAN HEAD		9.000	EA	4					
103	05	3370038	CORD,LINE	80-1245		1.000	EA	4					
104	02	1612324	PROBE, PT 060-24-2	PT 060-24-2		1.000	EA	4					
105	02	1250950	CHASSIS SLIDES	C-300-S-1-14		.000	PR	4					

PRINT PHANTOM ITEMS
PRINT COMPONENTS
PRINT PHANTOM/COMPONENT COMMENTS

PARENT ITEM CROSS REF ITEM DESCRIPTION FINAL ASSY 606 RX MONO 940-960 BATCH QTY 1 ITEM TYPE 0 LOW LEVEL 01
9550021 ENGR DRAW 2102739-04 N UNIT MEAS EA PLANNER 450

BOM ITEM	LL CD	COMPONENT & CROSS REF.	DESCRIPTION & COMMENT	ENGINEERING DRAWING NUMBER		QUANTITY PER	UM	ITEM TYP	OPT NBR	FIRST OP SEQ	LT ADJ	EFFECTIVE DATES FROM	TO
100	02	9502790	PCL-606/M RCVR 940-960 MHZ	2102739-04	N	1.000	EA	1					
101	02	2031605	COVER PCL-606 RCVR	0502785	G	1.000	EA	2					
102	05	1050129	SCR PNHD PHPS 4/40 X 1/4 SST	PAN HEAD		9.000	EA	4					
103	05	3370038	CORD.LINE	80-1245		1.000	EA	4					
104	02	1612324	PROBE, PT 080-24-2	PT 080-24-2		1.000	EA	4					
105	02	1250950	CHASSIS SLIDES	C-300-S-1-14		.000	PR	4					

PRINT PHANTOM ITEMS
PRINT COMPONENTS
PRINT PHANTOM/COMPONENT COMMENTS

PARENT ITEM 9502790 | CROSS REF ITEM | DESCRIPTION PCL-606/M RCVR 940-960 MHZ ENGR DRAW 2102739-04 N | BATCH QTY 1 | ITEM TYPE 1 UNIT MEAS EA | LOW LEVEL 02 PLANNER 450

BOM ITEM	LL CD	COMPONENT & CROSS REF.	DESCRIPTION & COMMENT	ENGINEERING DRAWING NUMBER		QUANTITY PER	UM	ITEM TYP	OPT NBR	FIRST OP SEQ	LT ADJ	EFFECTIVE DATES FROM	TO
1	03	2032597	CHASSIS PCL-606 RCVR	0502778	E	1.000	EA	2					
2	03	2062750	LOCKING BAR RX	0502861	A0	1.000	EA	4					
3	03	2062495	U-BRACKET PCL-606	0502777	A0	1.000	EA	2					
7	03	9102070	FRONT PANEL ASSY PCL-606	2102740	D	1.000	EA	1					
9	05	1050129	SCR PNHD PHPS 4/40 X 1/4 SST	PAN HEAD		15.000	EA	4					
10	03	1090315	SCR BTNHD SKT CAP6/32 X3/8	BUTTON HEAD		7.000	EA	4					
11	05	1090182	SCR PNHD PHPS 6/32 X 1/4 SST	BINDER HEAD		14.000	EA	4					
12	05	1090604	WSHR FL #6 CD PL SM PATT	AN960-6 CAD 1		6.000	EA	4					
13	03	2062719	SPACER,LOCKING BAR RCVR PCL606	0502858	A0	2.000	EA	2					
14	03	2062784	ANGLE LOCKING BAR 6 TABS 606	0502865	B	1.000	EA	4					
15	06	1290071	STRIP,BSHG/GROM,.056IN,12.75LI	GS-NY052NA		1.000	EA	4					
17	03	9301284	FM DEMOD PCL-606	2002811	L	1.000	EA	1					
18	03	9102112	PWR SUPPLY ASSY RCVR PCL-606	2102741 E0		1.000	EA	1					
21	03	9301177	70-3 MHZ MONO DBL CONV PCL-606	2002824-2	X1	1.000	EA	1					
25	03	9301417	MONO BASE BAND PROC PCL-606	2002837	D	1.000	EA	1					
28	03	9102591	MUTE & TRANS MONO PCL-606	2102775	B	1.000	EA	1					
30	03	9102138	950 MHZ PRESELECT ASSY PCL-606	2102754 A1		1.000	EA	1					
36	03	9301268	950 MHZ PREAMP/1ST MIX PCL-606	2002827	M	1.000	EA	1					
41	03	9301243	80.7/13.7 2ND/3RD LO PCL-606	2002829	J	1.000	EA	1					
45	03	9301551	LO 1ST PCL-606 940-960 MHZ RX	2002828-4	P	1.000	EA	1					
53	03	2350593	HARN ASSY PCL-606 RCVR	2901049	C	1.000	EA	1					
58	04	2201978	CA ASSY SMB/RT-SMB/RT 7"	2481074-1	A0	7.000	EA	9					

PRINT PHANTOM ITEMS
PRINT COMPONENTS
PRINT PHANTOM/COMPONENT COMMENTS

PARENT ITEM 9550120 CROSS REF ITEM DESCRIPTION FINAL ASSY 606RX MONO 920-940 ENGR DRAW 2102739-05 N BATCH QTY 1 ITEM TYPE 1 UNIT MEAS EA LOW LEVEL 01 PLANNER 450

BOM ITEM	LL CD	COMPONENT & CROSS REF.	DESCRIPTION & COMMENT	ENGINEERING DRAWING NUMBER	QUANTITY PER	ITEM UM	TYP	OPT NBR	FIRST OP SEQ	LT ADJ	EFFECTIVE DATES FROM	TO
100	02	9503665	PCL-606/M RCVR 920-940 MHZ	2102739-05 N	1.000	EA	1					
101	02	2031805	COVER PCL-606 RCVR	05C2785 3	1.000	EA	2					
102	05	1050129	SCR PNHD PHPS 4/40 X 1/4 SST	PAN HEAD	9.000	EA	4					
103	05	3370038	CORD,LINE	80-1245	1.000	EA	4					
104	02	1512324	PROBE, PT 080-24-2	PT 080-24-2	1.000	EA	4					
105	02	1250950	CHASSIS SLIDES	C-300-S-1-14	.000	PR	4					

PRINT PHANTOM ITEMS
PRINT COMPONENTS
PRINT PHANTOM/COMPONENT COMMENTS

PARENT ITEM 9503665 CROSS REF ITEM DESCRIPTION PCL-606/M RCVR 920-940 MHZ ENGR DRAW 21D2739-05 N BATCH QTY 1 ITEM TYPE 1 UNIT MEAS EA LOW LEVEL 02 PLANNER 450

BOM ITEM	LL CD	COMPONENT & CROSS REF.	DESCRIPTION & COMMENT	ENGINEERING DRAWING NUMBER		QUANTITY PER	UM	ITEM TYP	OPT NBR	FIRST OP SEQ	LT ADJ	EFFECTIVE DATES FROM	TO
1	03	2031847	CHASSIS PCL-606 RCVR	0502778	F	1.000	EA	2					
2	03	2062750	LOCKING BAR RX	0582361	AO	1.000	EA	4					
3	03	2062495	U-BRACKET PCL-606	0582779	AO	1.000	EA	2					
7	03	9102070	FRONT PANEL ASSY PCL-606	21D2740	D	1.000	EA	1					
9	05	1050129	SCR PNHD PHPS 4/40 X 1/4 SST	PAN HEAD		15.000	EA	4					
10	03	1090315	SCR BTNHD SKT CAP6/32 X3/8	BUTTON HEAD		7.000	EA	4					
11	05	1090162	SCR PNHD PHPS 5/32 X 1/4 SST	BINDER HEAD		14.000	EA	4					
12	05	1090604	WSHR FL #5 CD PL SM PATT	AN960-6 CAD	1	6.000	EA	4					
13	03	2062719	SPACER,LOCKING BAR RCVR PCL606	0582658	AO	2.000	EA	2					
14	03	2062784	ANGLE LOCKING BAR 6 TABS 606	0582865	B	1.000	EA	4					
15	05	1290071	STRIP.3586/6804..056IN.12.75LT	GS-NY052NA		1.000	EA	4					
17	03	9301284	FM DEMOD PCL-606	2002811	L	1.000	EA	1					
18	03	9102112	PWR SUPPLY ASSY RCVR PCL-606	21D2741	EO	1.000	EA	1					
21	03	9301177	70-3 MHZ MONO DBL COMV PCL-606	2002824-2	XI	1.000	EA	1					
25	03	9301417	MONO BASE BAND PROC PCL-606	2002837	D	1.000	EA	1					
28	03	9102591	MUTE & TRANS MONO PCL-606	21D2775	B	1.000	EA	1					
30	03	9102135	950 MHZ PRESELECT ASSY PCL-606	21D2754	A1	1.000	EA	1					
36	03	9301268	950 MHZ PREAMP/1ST MIX PCL-606	2002827	M	1.000	EA	1					
41	03	9301243	80.7/13.7 2ND/3RD LO PCL-606	2002829	J	1.000	EA	1					
46	03	9301599	LO 1ST PCL-606 920-940 MHZ RX	2002828-5	P	1.000	EA	1					
53	03	2350593	HARN ASSY PCL-606 RCVR	2901049	C	1.000	EA	1					
58	04	2201978	CA ASSY SMB/RT-SMB/RT 7"	2481074-1	AO	7.000	EA	9					

PRINT PHANTOM ITEMS
PRINT COMPONENTS
PRINT PHANTOM/COMPONENT COMMENTS

PARENT ITEM 9550138 CROSS REF ITEM DESCRIPTION FINAL ASSY 606 RX MONO 910-920 ENGR DRAW 2102739-06 N BATCH QTY 1 ITEM TYPE 1 UNIT MEAS EA LOW LEVEL 01 PLANNER 450

BOM ITEM	LL CO	COMPONENT & CROSS REF.	DESCRIPTION & COMMENT	ENGINEERING DRAWING NUMBER		QUANTITY PER	UM	ITEM TYP	OPT NBR	FIRST OP SEQ	LT ADJ	EFFECTIVE DATES FROM	TO
100	02	9503673	PCL-606/M RCVR 910-920 MHZ	2102739-06	N	1.000	EA	1					
101	02	2031805	COVER PCL-606 RCVR	0502785	G	1.000	EA	2					
102	05	1050129	SCR PNHD PHPS 4/40 X 1/4 SST	PAN HEAD		9.000	EA	4					
103	05	3370038	CORD.LINE	80-1245		1.000	EA	4					
104	02	1612324	PROBE, PT 080-24-2	PT 080-24-2		1.000	EA	4					
105	02	1250950	CHASSIS SLIDES	C-300-3-1-14		.000	PR	4					

PRINT PHANTOM ITEMS
PRINT COMPONENTS
PRINT PHANTOM/COMPONENT COMMENTS

PARENT ITEM 9503673 | CROSS REF ITEM | DESCRIPTION PCL-606/M RCVR 910-920 MHZ ENGR DRAW 2102739-06 N | BATCH QTY 1 | ITEM TYPE 1 UNIT MEAS EA | LOW LEVEL 02 PLANNER 450

BOM ITEM	LL CD	COMPONENT & CROSS REF.	DESCRIPTION & COMMENT	ENGINEERING DRAWING NUMBER		QUANTITY PER	ITEM UM	ITEM TYP	OPT NBR	FIRST OP SEQ	LT ADJ	EFFECTIVE DATES FROM	TO
1	03	2031647	CHASSIS PCL-606 RCVR	0502778	E	1.000	EA	2					
2	03	2062750	LOCKING BAR RX	0502861	A0	1.000	EA	4					
3	03	2062495	U-BRACKET PCL-606	0502779	A0	1.000	EA	2					
7	03	9102070	FRONT PANEL ASSY PCL-606	2102740	D	1.000	EA	1					
9	05	1050129	SCR PNHD PHPS 4/40 X 1/4 SST	PAN HEAD		15.000	EA	4					
10	03	1090315	SCR BTNHD SKT CAP6/32 X3/8	BUTTON HEAD		7.000	EA	4					
11	05	1090182	SCR PNHD PHPS 6/32 X 1/4 SST	BINDER HEAD		14.000	EA	4					
12	05	1090604	WSHR FL #6 CD PL SM PATT	AN960-6 CAD 1		6.000	EA	4					
13	03	2062719	SPACER,LOCKING BAR RCVR PCL606	0502858	A0	2.000	EA	2					
14	03	2062784	ANGLE LOCKING BAR & TABS 606	0502865	B	1.000	EA	4					
15	06	1290071	STRIP,ASHG/GROM,.056IN,12.75LI	GS-NY052NA		1.000	EA	4					
17	03	9301284	FM DEMOD PCL-606	2002811	L	1.000	EA	1					
18	03	9102112	PWR SUPPLY ASSY RCVR PCL-606	2102741 E0		1.000	EA	1					
21	03	9301177	70-3 MHZ MONO DEL CONV PCL-606	2002824-2	X1	1.000	EA	1					
25	03	9301417	MONO BASE BAND PROC PCL-606	2002837	D	1.000	EA	1					
28	03	9102591	MUTE & TRANS MONO PCL-606	2102775	B	1.000	EA	1					
30	03	9102138	950 MHZ PRESELECT ASSY PCL-606	2102754 A1		1.000	EA	1					
36	03	9301268	950 MHZ PREAMP/1ST MIX PCL-606	2002827	M	1.000	EA	1					
41	03	9301243	80.7/13.7 2ND/3RD LO PCL-606	2002829	J	1.000	EA	1					
47	03	9301607	LO 1ST PCL-606 910-920 MHZ RX	2002829-6	P	1.000	EA	1					
53	05	2350593	HARN ASSY PCL-606 RCVR	2901049	C	1.000	EA	1					
58	04	2201978	CA ASSY SMB/RT-SMB/RT 7"	2481074-1	A0	7.000	EA	9					

PRINT PHANTOM ITEMS
PRINT COMPONENTS
PRINT PHANTOM/COMPONENT COMMENTS

PARENT ITEM	CROSS REF ITEM	DESCRIPTION	BATCH QTY	ITEM TYPE	LOW LEVEL
9550146		FINAL ASSY 606 RX XOMP 440-470	1	0	01
		ENGR DRAW 21D2739-07 N		UNIT MEAS EA	PLANNER 470

BOM ITEM	LL CO	COMPONENT & CROSS REF.	DESCRIPTION & COMMENT	ENGINEERING DRAWING NUMBER	QUANTITY PER	UM	ITEM TYP	OPT NBR	FIRST OP SEQ	LT ADJ	EFFECTIVE DATES FROM	TO
100	02	9503715	PCL-606/C RCVR 440-470 MHZ	21D2739-07 N	1.000	EA	1					
101	02	2031805	COVER PCL-606 RCVR	05C2785 G	1.000	EA	2					
102	05	1050129	SCR PNHD PHPS 4/40 X 1/4 SST	PAN HEAD	9.000	EA	4					
103	05	3370038	CORD,LINE	80-1245	1.000	EA	4					
104	02	1612324	PROBE, PT 080-24-2	PT 080-24-2	1.000	EA	4					
105	02	1250950	CHASSIS SLIDES	C-300-5-1-14	.000	PR	4					

PRINT PHANTOM ITEMS
PRINT COMPONENTS
PRINT PHANTOM/COMPONENT COMMENTS

PARENT ITEM 9503715 | CROSS REF ITEM | DESCRIPTION PCL-606/C RCVR 440-470 MHZ ENGR DRAW 2102739-07 N | BATCH QTY 1 | ITEM TYPE 1 UNIT MEAS EA | LOW LEVEL 02 PLANNER 470

SUM ITEM	LL CO	COMPONENT & CROSS REF.	DESCRIPTION & COMMENT	ENGINEERING DRAWING NUMBER		QUANTITY PER	UM	ITEM TYP	OPT NBR	FIRST OP SEQ	LT ADJ	EFFECTIVE DATES FROM	TO
1	03	2031847	CHASSIS PCL-606 RCVR	0502778	E	1.000	EA	2					
2	03	2062750	LOCKING BAR RX	0582861	A0	1.000	EA	4					
3	03	2062495	U-BRACKET PCL-606	0582779	A0	1.000	EA	2					
4	03	1231042	STOP 1/4 HEX 4-40 X 1-1/4 ALUM	8224-A-0440		2.000	EA	4					
6	03	9103888	FRONT PANEL ASSY 300-480 MHZ	2102802	C	1.000	EA	1					
9	05	1050129	SCR PNHD PHPS 4/40 X 1/4 SST	PAN HEAD		19.000	EA	4					
10	03	1090315	SCR BTNHD SKT CAP6/32 X3/8	BUTTON HEAD		7.000	EA	4					
11	05	1090132	SCR PNHD PHPS 6/32 X 1/4 SST	BINDER HEAD		14.000	EA	4					
12	05	1090604	WSHR FL #6 CD PL SM PATT	AN960-6 CAD 1		6.000	EA	4					
13	03	2062719	SPACER,LOCKING BAR RCVR PCL606	0582858	A0	2.000	EA	2					
14	03	2062734	ANGLE LOCKING BAR 6 TABS 606	0582865	B	1.000	EA	4					
15	06	1290071	STRIP,BSHG/GROM,.056IN.12.75LI	GS-NY052NA		1.000	EA	4					
17	03	9301284	FM DEMOD PCL-606	2002811	L	1.000	EA	1					
18	03	9102112	PWR SUPPLY ASSY RCVR PCL-606	2102741 E0		1.000	EA	1					
23	03	9301912	ASSY, BASEBAND PROC 115KHZ 606	2002812-2	J	.000	EA	1					
24	03	9301292	ASSY, BASEBAND PROC 80KHZ 606	2002812-1	J	1.000	EA	1					
27	03	9102120	MUTE & TRANSFER ASSY PCL-606	2102742	C	1.000	EA	1					
32	03	9301664	ASSY RF MOD PCL-606 440-470MHZ	2102803-2		1.000	EA	1					
38	03	9301615	155-451-3MHZ DBL CONV PCL-606	2002884-1	B	1.000	EA	1					
43	03	9301714	55-96 2ND LO/SYNTH PCL-606 RX	2002882	A	1.000	EA	1					
48	03	9301656	1ST LO 300-480 MHZ PCL-606	2002881	D	1.000	EA	1					
54	03	2350668	HARNESS PCL-606 RX 300-480 MHZ	2901055	A	1.000	EA	1					
58	04	2201978	CA ASSY SMB/RT-SMB/RT 7"	2491074-1	A0	4.000	EA	9					

PRINT PHANTOM ITEMS
PRINT COMPONENTS
PRINT PHANTOM/COMPONENT COMMENTS

PARENT ITEM	CROSS REF ITEM	DESCRIPTION	BATCH QTY	ITEM TYPE	LOW LEVEL
9503715		PCL-606/C RCVR 440-470 MHZ ENGR DRAW 21D2739-07 N	1	1 UNIT MEAS EA	02 PLANNER 470

BOM ITEM	LL CD	COMPONENT & CROSS REF.	DESCRIPTION & COMMENT	ENGINEERING DRAWING NUMBER		QUANTITY PER	ITEM UM	TYP	OPT NBR	FIRST OP SEQ	LT ADJ	EFFECTIVE DATES FROM	TO
59	03	2202422	COAX ASSY SMB/RT-SMB/RT 21"	2431074-5	A0	1.000	EA		9				

PRINT PHANTOM ITEMS
PRINT COMPONENTS
PRINT PHANTOM/COMPONENT COMMENTS

PARENT ITEM 9550179 CROSS REF ITEM DESCRIPTION FINAL ASSY 606 RC MONO 440-470 ENGR DRAW 2102739-08 N BATCH QTY 1 ITEM TYPE 0 UNIT MEAS EA LOW LEVEL 01 PLANNER 470

SCM ITEM	LL CD	COMPONENT & CROSS REF.	DESCRIPTION & COMMENT	ENGINEERING DRAWING NUMBER	QUANTITY PER	UM	ITEM TYP	OPT NBR	FIRST OP SEQ	LT ADJ	EFFECTIVE DATES FROM	TO
100	02	9503731	PCL-606/M RCVR 440-470 MHZ	2102739-08 N	1.000	EA	1					
101	02	2011905	COVER PCL-606 RCVR	0502785 G	1.000	EA	2					
102	05	1050129	SCR PNHD PHPS 4/40 X 1/4 SST	PAN HEAD	9.000	EA	4					
103	05	3370038	CORD,LINE	80-1245	1.000	EA	4					
104	02	1512324	PROBE, PT 080-24-2	PT 080-24-2	1.000	EA	4					
105	02	1250950	CHASSIS SLIDES	C-300-S-1-14	.000	PR	4					

PRINT PHANTOM ITEMS
PRINT COMPONENTS
PRINT PHANTOM/COMPONENT COMMENTS

PARENT ITEM 9503731 | CROSS REF ITEM | DESCRIPTION PCL-606/M RCVR 440-470 MHZ ENGR DRAW 2102739-08 N | BATCH QTY 1 | ITEM TYPE 1 UNIT MEAS EA | LOW LEVEL 02 PLANNER 470

SCM ITEM	LL CD	COMPONENT & CROSS REF.	DESCRIPTION & COMMENT	ENGINEERING DRAWING NUMBER		QUANTITY PER	UM	ITEM TYP	OPT NBR	FIRST OP SEQ	LT ADJ	EFFECTIVE DATES FROM	TO
1	03	2031847	CHASSIS PCL-606 RCVR	0502778	E	1.000	EA	2					
2	03	2062750	LOCKING BAR RX	0562861	A0	1.000	EA	4					
3	03	2062495	U-BRACKET PCL-606	0562779	A0	1.000	EA	2					
4	03	1231042	STDF 1/4 HEX 4-40 X 1-1/4 ALUM	8224-A-0440		2.000	EA	4					
6	03	9103888	FRONT PANEL ASSY 300-480 MHZ	2102802	C	1.000	EA	1					
9	05	1050129	SCR PNHD PHPS 4/40 X 1/4 SST	PAN HEAD		19.000	EA	4					
10	03	1090315	SCR BTNHD SKT CAP6/32 X3/8	BUTTON HEAD		7.000	EA	4					
11	05	1090132	SCR PNHD PHPS 6/32 X 1/4 SST	BINDER HEAD		14.000	EA	4					
12	05	1090604	WSHR FL #6 CD PL SM PATT	AN960-6 CAD 1		6.000	EA	4					
13	03	2062719	SPACER,LOCKING BAR RCVR PCL606	0562858	A0	2.000	EA	2					
14	03	2062784	ANGLE LOCKING BAR & TABS 606	0562855	B	1.000	EA	4					
15	06	1290071	STRIP,ISHG/GROM,.056IN,12.75LI	GS-NY052NA		1.000	EA	4					
17	03	9301284	FM DEMOD PCL-606	2002811	L	1.000	EA	1					
18	03	9102112	PWR SUPPLY ASSY RCVR PCL-606	2102741 E0		1.000	EA	1					
25	03	9301417	MONO BASE BAND PROC PCL-606	2002837	D	1.000	EA	1					
28	03	9102591	MUTE & TRANS MONO PCL-606	2102775	B	1.000	EA	1					
32	03	9301604	ASSY RF MOD PCL-606 440-470MHZ	2102803-2		1.000	EA	1					
39	03	9301623	(55-85)-3MHZ DBL CONV PCL-606	2002884-2	B	1.000	EA	1					
43	03	9301714	65-96 2ND LO/SYNTH PCL-606 RX	2002882	A	1.000	EA	1					
48	03	9301656	1ST LO 300-480 MHZ PCL-606	2002881	D	1.000	EA	1					
54	03	2350608	HARNESS PCL-606 RX 300-480 MHZ	2901055	A	1.000	EA	1					
58	04	2201978	CA ASSY SMB/RT-SMB/RT 7"	2481074-1	A0	4.000	EA	9					
59	03	2202422	COAX ASSY SMB/RT-SMB/RT 21"	2481074-5	A0	1.000	EA	9					

PRINT PHANTOM ITEMS
PRINT COMPONENTS
PRINT PHANTOM/COMPONENT COMMENTS

PARENT ITEM 9551342 | CROSS REF ITEM | DESCRIPTION FINAL ASSY 606 RX COMP 300-330 ENGR DRAW 2102739-09 N | BATCH QTY 1 | ITEM TYPE 1 UNIT MEAS EA | LOW LEVEL 00 PLANNER 470

BOM ITEM	LL CD	COMPONENT & CROSS REF.	DESCRIPTION & COMMENT	ENGINEERING DRAWING NUMBER		QUANTITY PER	UM	ITEM TYP	OPT NBR	FIRST OP SEQ	LT ADJ	EFFECTIVE DATES FROM	TO
100	01	9503947	PCL-606/C RCVR 300-330 MHZ	2102739-09	N	1.000	EA	1					
101	02	2031605	COVER PCL-606 RCVR	0502785	G	1.000	EA	2					
102	05	1050129	SCR PNHD PHPS 4/40 X 1/4 SST	PAN HEAD		9.000	EA	4					
103	05	3370038	CORD,LINE	80-1245		1.000	EA	4					
104	02	1612324	PROBE, PT 080-24-2	PT 080-24-2		1.000	EA	4					
105	02	1250950	CHASSIS SLIDES	C-300-S-1-14		1.000	PR	4					

PRINT PHANTOM ITEMS
PRINT COMPONENTS
PRINT PHANTOM/COMPONENT COMMENTS

PARENT ITEM 9503947 CROSS REF ITEM DESCRIPTION PCL-606/C RCVR 300-330 MHZ ENGR DRAW 2102739-09 N BATCH QTY 1 ITEM TYPE 1 UNIT MEAS EA LOW LEVEL 01 PLANNER 470

BOM ITEM	LL CD	COMPONENT & CROSS REF.	DESCRIPTION & COMMENT	ENGINEERING DRAWING NUMBER		QUANTITY PER	UM	ITEM TYP	OPT NBR	FIRST OP SEQ	LT ADJ	EFFECTIVE DATES FROM	TO
1	03	2031847	CHASSIS PCL-606 RCVR	0502778	E	1.000	EA	2					
2	03	2062750	LOCKING BAR RX	0582961	A0	1.000	EA	4					
3	03	2062495	U-BRACKET PCL-606	0582779	A0	1.000	EA	2					
4	03	1231042	STDF 1/4 HEX 4-40 X 1-1/4 ALUM	8224-A-0440		2.000	EA	4					
6	03	9103338	FRONT PANEL ASSY 300-480 MHZ	2102302	C	1.000	EA	1					
9	05	1050129	SCR PNHD PHPS 4/40 X 1/4 SST	PAN HEAD		19.000	EA	4					
10	03	1090315	SCR BTNHD SKT CAP6/32 X3/8	BUTTON HEAD		7.000	EA	4					
11	05	1090132	SCR PNHD PHPS 6/32 X 1/4 SST	BINDER HEAD		14.000	EA	4					
12	05	1090604	WSHR FL #6 CD PL SM PATT	AN960-6 CAD 1		6.000	EA	4					
13	03	2062719	SPACER,LOCKING BAR RCVR PCL606	0582858	A0	2.000	EA	2					
14	03	2062764	ANGLE LOCKING BAR 6 TABS 606	0582865	B	1.000	EA	4					
15	06	1290071	STRIP,BSHG/GRUM,.056IN,12.75L1	GS-NY052NA		1.000	EA	4					
17	03	9301284	FM DEMOD PCL-606	2002811	L	1.000	EA	1					
18	03	9102112	PWR SUPPLY ASSY RCVR PCL-606	2102741 E0		1.000	EA	1					
23	03	9301912	ASSY, BASEBAND PROC 115KHZ 606	2002812-2	J	.000	EA	1					
24	03	9301292	ASSY, BASEBAND PROC 90KHZ 606	2002812-1	J	1.000	EA	1					
27	03	9102120	MUTE & TRANSFER ASSY PCL-606	2102742	C	1.000	EA	1					
33	02	9301805	ASSY RF MOD PCL-606 300-330MHZ	2102803-1	B	1.000	EA	1					
36	03	9301615	(55-85)-3MHZ DBL CONV PCL-606	2002834-1	B	1.000	EA	1					
43	03	9301714	65-96 2ND LO/SYNTH PCL-606 RX	2002832	A	1.000	EA	1					
48	03	9301656	1ST LO 300-480 MHZ PCL-606	2002891	D	1.000	EA	1					
54	03	2350668	HARNESS PCL-606 RX 300-480 MHZ	2901055	A	1.000	EA	1					
58	04	2201978	CA ASSY SMB/RT-SMB/RT 7"	2481074-1	A0	4.000	EA	9					

PRINT PHANTOM ITEMS
PRINT COMPONENTS
PRINT PHANTOM/COMPONENT COMMENTS

PARENT ITEM	CROSS REF ITEM	DESCRIPTION	BATCH QTY	ITEM TYPE	LOW LEVEL
9503947		PCL-606/C RCVR 300-330 MHZ ENGR DRAW 2102739-09 N	1	I UNIT MEAS EA	01 PLANNER 470

BOM ITEM	LL CD	COMPONENT & CROSS REF.	DESCRIPTION & COMMENT	ENGINEERING DRAWING NUMBER		QUANTITY PER	ITEM UM	TYP	OPT NBR	FIRST OP SEQ	LT ADJ	EFFECTIVE DATES FROM	TO
59	03	2202422	COAX ASSY SMB/RT-SMB/RT 21"	2431074-5	A0	1.000	EA	9					

PRINT PHANTOM ITEMS
PRINT COMPONENTS
PRINT PHANTOM/COMPONENT COMMENTS

PARENT ITEM 9551334 CROSS REF ITEM DESCRIPTION FINAL ASSY 606 RX MONO 300-330 ENGR DRAW 2102739-10 N BATCH QTY 1 ITEM TYPE 1 UNIT MEAS EA LOW LEVEL 00 PLANNER 470

BOM ITEM	LL CD	COMPONENT & CROSS REF.	DESCRIPTION & COMMENT	ENGINEERING DRAWING NUMBER	QUANTITY PER	UM	ITEM TYP	OPT NBR	FIRST OP SEQ	LT ADJ	EFFECTIVE DATES FROM	TO
100	01	9503939	PCL-606/M RCVR 300-330 MHZ	2102739-10 N	1.000	EA	1					
101	02	2031605	COVER PCL-606 RCVR	0502785 G	1.000	EA	2					
102	05	1050129	SCR PNHD PHPS 4/40 X 1/4 SST	PAN HEAD	9.000	EA	4					
103	05	3370038	CORD,LINE	80-1245	1.000	EA	4					
104	02	1612324	PROBE, PT 080-24-2	PT 080-24-2	1.000	EA	4					
105	02	1250950	CHASSIS SLIDES	C-300-5-1-14	1.000	PR	4					

PRINT PHANTOM ITEMS
PRINT COMPONENTS
PRINT PHANTOM/COMPONENT COMMENTS

PARENT ITEM 9503939 CROSS REF ITEM DESCRIPTION PCL-606/M RCVR 300-330 MHZ ENGR DRAW 2102739-10 N BATCH QTY 1 ITEM TYPE 1 UNIT MEAS EA LOW LEVEL 01 PLANNER 470

BOM ITEM	LL CD	COMPONENT & CROSS REF.	DESCRIPTION & COMMENT	ENGINEERING DRAWING NUMBER		QUANTITY PER	UM	ITEM TYP	OPT NBR	FIRST OP SEQ	LT ADJ	EFFECTIVE DATES FROM	TO
1	03	2031847	CHASSIS PCL-606 RCVR	0502776	E	1.000	EA	2					
2	03	2062750	LOCKING BAR RX	0502861	A0	1.000	EA	4					
3	03	2062495	U-BRACKET PCL-606	0502779	A0	1.000	EA	2					
4	03	1231042	STDF 1/4 HEX 4-40 X 1-1/4 ALUM	8224-A-0440		2.000	EA	4					
6	03	9103888	FRONT PANEL ASSY 300-480 MHZ	2102802	C	1.000	EA	1					
9	05	1050129	SCR PNHD PHPS 4/40 X 1/4 SST	PAN HEAD		19.000	EA	4					
10	03	1090315	SCR BTNHD SKT CAP6/32 X3/6	BUTTON HEAD		7.000	EA	4					
11	05	1090182	SCR PNHD PHPS 6/32 X 1/4 SST	BINDER HEAD		14.000	EA	4					
12	05	1090604	WSHR FL #6 CD PL SM PATT	AN960-6 CAD 1		6.000	EA	4					
13	03	2062719	SPACER,LOCKING BAR RCVR PCL606	0502858	A0	2.000	EA	2					
14	03	2062764	ANGLE LOCKING BAR 6 TABS 606	0502865	B	1.000	EA	4					
15	06	1290071	STRIP,BSHG/GROM,.056IN,12.75L1	GS-NY052NA		1.000	EA	4					
17	03	9301284	FM DEMOD PCL-606	2002811	L	1.000	EA	1					
18	03	9102112	PWR SUPPLY ASSY RCVR PCL-606	2102741 E0		1.000	EA	1					
25	03	9301417	MONO BASE BAND PROC PCL-606	2002837	D	1.000	EA	1					
28	03	9102591	MUTE & TRANS MONO PCL-606	2102775	B	1.000	EA	1					
33	02	9301805	ASSY RF MOD PCL-606 300-330MHZ	2102803-1	B	1.000	EA	1					
39	03	9301623	(55-45)-1MHZ DBL CONV PCL-606	2002884-2	B	1.000	EA	1					
43	03	9301714	65-96 2ND LO/SYNTH PCL-606 RX	2002882	A	1.000	EA	1					
48	03	9301656	1ST LO 300-480 MHZ PCL-606	2002891	D	1.000	EA	1					
54	03	2350658	HARNESS PCL-606 RX 300-480 MHZ	2901055	A	1.000	EA	1					
58	04	2201978	CA ASSY SMB/RT-SMB/RT 7"	2481074-1	A0	4.000	EA	9					
59	03	2202422	COAX ASSY SMB/RT-SMB/RT 21"	2481074-5	A0	1.000	EA	9					

PRINT PHANTOM ITEMS
PRINT COMPONENTS
PRINT PHANTOM/COMPONENT COMMENTS

PARENT ITEM 9551284 | CROSS REF ITEM | DESCRIPTION ASSY ENLRX PCL-606/C 1695-1715 ENGR DRAW 2102739-11 N | BATCH QTY 1 | ITEM TYPE 0 UNIT MEAS EA | LOW LEVEL 01 PLANNER 440

BOM ITEM	LL CD	COMPONENT & CROSS REF.	DESCRIPTION & COMMENT	ENGINEERING DRAWING NUMBER	QUANTITY PER	ITEM UM	ITEM TYP	OPT NBR	FIRST OP SEQ	LT ADJ	EFFECTIVE DATES FROM	TO
100	02	9503954	ASSY RCVR PCL-606/C 1695-1715	2102739-11 N	1.000	EA	1					
101	02	2031805	COVER PCL-606 RCVR	0502735 G	1.000	EA	2					
102	05	1050129	SCR PNHD PHPS 4/40 X 1/4 SST	PAN HEAD	9.000	EA	4					
103	05	3370038	CORD,LINE	80-1245	1.000	EA	4					
104	02	1612324	PROBE, PT 080-24-2	PT 080-24-2	1.000	EA	4					

PRINT PHANTOM ITEMS
PRINT COMPONENTS
PRINT PHANTOM/COMPONENT COMMENTS

PARENT ITEM 9503954 | CROSS REF ITEM | DESCRIPTION ASSY RCVR PCL-606/C 1695-1715 ENGR DRAW 2102739-11 N | BATCH QTY 1 | ITEM TYPE 1 UNIT MEAS EA | LOW LEVEL 02 PLANNER 440

BOM ITEM	LL CO	COMPONENT & CROSS REF.	DESCRIPTION & COMMENT	ENGINEERING DRAWING NUMBER		QUANTITY PER	UM	ITEM TYP	OPT NBR	FIRST OP SEQ	LT ADJ	EFFECTIVE DATES FROM	TO
1	03	2031847	CHASSIS PCL-606 RCVR	0502778	E	1.000	EA	2					
2	03	2062750	LOCKING BAR RX	0532661	AO	1.000	EA	4					
3	03	2062495	U-BRACKET PCL-606	0502779	AO	1.000	EA	2					
7	03	9102070	FRONT PANEL ASSY PCL-606	2102740	D	1.000	EA	1					
9	05	1050129	SCR PNHD PHPS 4/40 X 1/4 SST	PAN HEAD		15.000	EA	4					
10	05	1090315	SCR BTNHD SKT CAP6/32 X3/8	BUTTON HEAD		7.000	EA	4					
11	05	1090182	SCR PNHD PHPS 6/32 X 1/4 SST	BINDER HEAD		14.000	EA	4					
12	05	1090604	WSHR FL #6 CD PL SM PATT	AN960-6 CAD 1		6.000	EA	4					
13	03	2062719	SPACER,LOCKING BAR RCVR PCL606	0582858	AO	2.000	EA	2					
14	03	2062784	ANGLE LOCKING BAR 6 TABS 606	0582865	B	1.000	EA	4					
15	06	1290071	STRIP,SSHG/GROM,.056IN,12.75L1	6S-NY052NA		1.000	EA	4					
17	03	9302284	FM DEMOD PCL-606	2002811	L	1.000	EA	1					
19	03	9104068	A3 ASSY POWER SUPPLY RCVR PCL-606	2102823	A	1.000	EA	1					
22	03	9301235	A8 7G-5 MHZ COMP DBL CONV PCL-606	2002824-1	X1	1.000	EA	1					
24	03	9301292	A4 ASSY. BASEBAND PROC 80KHZ 606	2002812-1	J	1.000	EA	1					
27	03	9102120	A2 MUTE & TRANSFER ASSY PCL-606	2102742	C	1.000	EA	1					
31	03	9104407	A9 ASSY PRESEL 1695-1715 MHZ	2102831-1	A	1.000	EA	1					
37	03	9301847	A10 ASSY PREAMP/MIXER 1.5-1.715GHZ	2002907	A	1.000	EA	1					
41	03	9301243	A6 80.7/13.7 2ND/3RD LO PCL-606	2002829	J	1.000	EA	1					
49	03	9301854	A7 ASSY 1ST LO NEUTER	2002908-1	A	1.000	EA	1					
53	03	2350593	A5 HARN ASSY PCL-606 RCVR	2901049	C	1.000	EA	1					
58	04	2201978	CA ASSY SMB/RT-SMB/RT 7"	2481074-1	AO	5.000	EA	9					
60	03	2202521	ASSY,COAX,SR,PRESEL-PREAMP	2481120	A	1.000	EA	1					

PRINT PHANTOM ITEMS
PRINT COMPONENTS
PRINT PHANTOM/COMPONENT COMMENTS

PARENT ITEM 9503954 | CROSS REF ITEM | DESCRIPTION ASSY RCVR PCL-606/C 1695-1715 ENGR DRAW 2102739-11 N | BATCH QTY 1 | ITEM TYPE I UNIT MEAS EA | LOW LEVEL 02 PLANNER 440

BOM ITEM	LL CD	COMPONENT & CROSS REF.	DESCRIPTION & COMMENT	ENGINEERING DRAWING NUMBER		QUANTITY PER	ITEM UM	TYP	OPT NBR	FIRST OP SEQ	LT ADJ	EFFECTIVE DATES FROM	TO
61	03	2202539	ASSY.COAX.SR.1STLO-PREAMP	2481121	A	1.000	EA	I					
62	03	3340908	XTAL 1ST LO 1.5-1.71GHZ DETER	30A0087	A	1.000	EA	4					

PRINT PHANTOM ITEMS
PRINT COMPONENTS
PRINT PHANTOM/COMPONENT COMMENTS

PARENT ITEM 9551359 CROSS REF ITEM DESCRIPTION FINAL ASSY.606 RX MONO 1.5-1.7 ENGR DRAW 21D2739-12 N BATCH QTY 1 ITEM TYPE 1 UNIT MEAS EA LOW LEVEL 00 PLANNER 440

BOM ITEM	LL CO	COMPONENT & CROSS REF.	DESCRIPTION & COMMENT	ENGINEERING DRAWING NUMBER		QUANTITY PER	UM	ITEM TYP	OPT NBR	FIRST OP SEQ	LT ADJ	EFFECTIVE DATES FROM	TO
100	01	9504002	ASSY RCVR PCL-606/M 1695-1715	21D2739-12	N	1.000	EA	1					
101	02	2031305	COVER PCL-606 RCVR	05C2735	G	1.000	EA	2					
102	05	1050129	SCR PNHD PHPS 4/40 X 1/4 SST	PAN HEAD		9.000	EA	4					
103	05	3370036	CORD.LINE	80-1245		1.000	EA	4					
104	02	1012324	PROBE. PT 080-24-2	PT 080-24-2		1.000	EA	4					
105	01	9301946	ASSY 1ST LO RX 1765-1785 MHZ	20D2938-3		1.000	EA	0					

PRINT PHANTOM ITEMS
PRINT COMPONENTS
PRINT PHANTOM/COMPONENT COMMENTS

PARENT ITEM 9504002 | CROSS REF ITEM | DESCRIPTION ASSY RCVR PCL-606/M 1695-1715 ENGR DRAW 21C2739-12 N | BATCH QTY 1 | ITEM TYPE 1 UNIT MEAS EA | LOW LEVEL 01 PLANNER 440

BOM ITEM	LL CD	COMPONENT & CROSS REF.	DESCRIPTION & COMMENT	ENGINEERING DRAWING NUMBER		QUANTITY PER	UM	ITEM TYP	OPT NBR	FIRST OP SEQ	LT ADJ	EFFECTIVE DATES FROM	TO
1	03	2031847	CHASSIS PCL-606 RCVR	050277d	E	1.000	EA	2					
2	03	2062750	LOCKING BAR RX	0582861	AO	1.000	EA	4					
3	03	2062495	U-BRACKET PCL-606	0582779	AU	1.000	EA	2					
7	03	9102070	FRONT PANEL ASSY PCL-606	2102740	D	1.000	EA	1					
9	05	1050129	SCR PNHD PHPS 4/40 X 1/4 SST	PAN HEAD		15.000	EA	4					
10	03	1090315	SCR BTNHD SKT CAPS/32 X3/6	BUTTON HEAD		7.000	EA	4					
11	05	1090162	SCR PNHD PHPS 6/32 X 1/4 SST	BINDER HEAD		14.000	EA	4					
12	05	1090604	WSHR FL #6 CD PL SM PATT	AN960-6 CAD 1		6.000	EA	4					
13	03	2062719	SPACER,LOCKING BAR RCVR PCL606	0582858	AO	2.000	EA	2					
14	03	2062784	ANGLE LOCKING BAR 6 TABS 606	0582865	B	1.000	EA	4					
15	05	1290071	STRIP,BUHG/GROM,.056IN,12.75LI	GS-NY052NA		1.000	EA	4					
17	03	9301284	FM DEMOD PCL-606 A3	2002811	L	1.000	EA	1					
19	03	9104068	ASSY POWER SUPPLY RCVR PCL-606 A6	2102823	A	1.000	EA	1					
21	03	9301177	70-3 MHZ MONO DBL CONV PCL-606 A9	2002824-2	X1	1.000	EA	1					
23	03	9301912	ASSY, BASEBAND PROC 115KHZ 606	2002812-2	J	.000	EA	1					
25	03	9301417	MONO BASE BAND PROC PCL-606 A2	2002837	D	1.000	EA	1					
28	03	9102591	MUTE & TRANS MONO PCL-606 A9	2102775	B	1.000	EA	1					
31	03	9104407	ASSY PRESEL 1695-1715 MHZ A10	21C2631-1	A	1.000	EA	1					
37	03	9301847	ASSY PREAMP/MIXER 1.5-1.71GHZ A6	2002907	A	1.000	EA	1					
41	03	9301243	30.7/13.7 2ND/3RD LO PCL-606 A7	2002829	J	1.000	EA	1					
53	03	2350593	HARN ASSY PCL-606 RCVR	2901049	C	1.000	EA	1					
58	04	2201978	CA ASSY SMB/RT-SMB/RT 7"	2481074-1	AO	5.000	EA	9					
60	03	2202521	ASSY,COAX,SR,PRESEL-PREAMP	2481120	A	1.000	EA	1					

PRINT PHANTOM ITEMS
PRINT COMPONENTS
PRINT PHANTOM/COMPONENT COMMENTS

PARENT ITEM	CROSS REF ITEM	DESCRIPTION	BATCH QTY	ITEM TYPE	LOW LEVEL
9504002		ASSY RCVR PCL-606/M 1695-1715 ENGR DRAW 2102739-12 N	1	1 UNIT MEAS EA	01 PLANNER 440

SCM ITEM	LL CO	COMPONENT & CROSS REF.	DESCRIPTION & COMMENT	ENGINEERING DRAWING NUMBER		QUANTITY PER	ITEM UM	OPT TYP	FIRST NBR	OP SEQ	LT ADJ	EFFECTIVE DATES FROM	TO
61	03	2202539	ASSY,COAX,SR,1STLO-PREAMP	2481121	A	1.000	EA	1					

SECTION 3

MOSELEY ASSOCIATES GENERAL INFORMATION

3.1 EQUIPMENT ISSUE IDENTIFICATION SYSTEM

Moseley Associates provides constant attention to the improvement of its product line, which requires occasional circuit changes on some modules and units. Whenever a circuit change is made, the schematic diagram and assembly drawing for the affected equipment are revised and reissued under a new revision letter. Identification markings on each module or unit identify the drawing revision used in its assembly and test.

The module identification markings of interest are normally on the component side of the PC board. These include the following:

- Assembly drawing number
- Revision letter to the assembly drawing
- Stock number

The assembly drawing number is printed on the PC board. A sample is

ASSY 20D2827

The revision letter is in a small white circle on the PC board. Samples are:

D or B0 or C1

The stock number is on a small piece of clear tape. A sample is:

2211/9301268

In some cases the stock number may not be included, or only the last seven digits may be on the piece of tape.

The other numbers on the PC board usually are not needed for identification, nor is the inspection stamp, which includes a number in a small white circle with the letters MAI.

3.2 CUSTOMER SERVICE INFORMATION

Moseley Associates, Inc. has a Technical Services Department to assist Moseley product users who experience difficulties. Our service is available at two levels: telephone consultation, and factory service. Any initial problems may be due to unfamiliarity with the equipment and can usually be corrected by the customer on site with the aid of the factory. Telephone consultation should always be the first step in any factory service transaction.

Arrangements for factory service can be made after consultation with the factory and assignment of a return authorization number. This order number assists our Receiving Department when your unit is returned for factory service and expedites processing while it is being repaired.

Telephone Consultation

If telephone assistance is necessary, please have the following information available prior to calling the factory. Supply the model number and serial number of your unit. If possible, include the module identification markings discussed above. Be prepared to accurately describe the difficulties encountered with your unit. What is the specific problem? Is the problem constant or intermittent? If intermittent, can it be correlated to external influences, i.e., temperature, time of day, humidity, etc.? In short, describe the problem as accurately and concisely as possible. A complete set of meter readings is always very helpful. Also be aware of the exact frequency of operation of your units.

Once prepared with the above-requested information, contact our Technical Services Department for assistance. A Technical Services Engineer is available during normal work hours (8:00 a.m. to 5:00 p.m., Pacific time, Monday to Friday). Should you require assistance outside normal work hours, or on weekends and holidays, Moseley Associates does maintain an emergency only telephone service.

If telephone assistance is required, our telephone number is

(805) 968-9621

This is both our normal business-hour telephone number as well as our emergency-only telephone number after hours.

Replacement Modules

Moseley Associates encourages the purchase of recommended spare parts kits to allow the customer to be totally self-sufficient with regard to parts. We recognize that there are extenuating circumstances when troubleshooting to the component level is neither practical nor possible. If this is the case, replacement module exchange may be the most expedient way of correcting the problem. Section 7 lists the recommended spares.

Replacement modules are normally available for immediate shipment. If you require a replacement module from Moseley Associates, please give your shipping address to our Technical Services Engineer. If the module or equipment to be supplied to your company is to be held at the airport with a telephone number to call, provide at least two telephone numbers. This will often expedite the delivery or pickup of the replacement module or equipment.

Field Repair

Always try to isolate the problem to a specific area or module, if possible. By comparing actual wave shapes and levels with those referenced on the block and level diagrams or schematics, the problem often can be localized to the component level.

If an intergrated circuit is suspect, carefully remove the original and plug in the new one in the same direction. These devices are installed one way only. Plugging in a new device backward may damage the newly-installed component or the surrounding circuitry. ICs occasionally exhibit temperature-sensitive characteristics. If a suspicious device operates intermittently, or appears to drift, Freeze Mist may aid in diagnosing the problem.

If a soldered component has to be removed from a printed circuit board, do the following:

Use a 40 W soldering iron with a 1/8-inch tip. Do not use a soldering gun. Excessive heat may cause damage!

Remove all solder contacting the lead or leads from the component and from the associated printed circuit pad. To assist in the removal of the solder, solder-sipping braid such as solder wick is very useful. Once the solder has been removed, remove the component from the board.

When installing the new component, pre-bend the leads of the replacement component so they will easily fit into the appropriate PC board holes. Solder each lead of the component to the bottom side of the board with a 40 W soldering iron with a 1/8-inch tip. Always use a good brand of rosin-core solder. The solder joint should be smooth and shiny. Also, be sure that excessive heat is not used in this soldering operation. Excessive heat will damage the printed circuit pad that comes in contact with the new component. Finally, cut each lead of the replacement component close to the solder on the pad side of the printed circuit board with a pair of diagonal cutters. Then remove all residual flux with either flux cleaner or a cotton swab moistened with flux cleaner.

Factory Service

When returning your equipment to Moseley Associates, Inc., the following suggestions are offered to assist you. If you are returning a module, ensure that the module is packed sufficiently to withstand the rigors of the journey. Make sure the shipping carton is packed evenly and fully, with packing material filling all voids so that the module cannot shift inside the shipping carton. The package should also be marked in red with the words "Electronic Equipment" or "Fragile." Remember, the condition of the module is totally dependent on the care taken in the packing. Reference the return authorization number that you had previously obtained from the factory on the outside of the carton or on the shipping label. Make sure that the name of your company is listed on the shipping label, and insure your module appropriately.

If you are shipping a complete chassis, all modules should be tied down as they were originally received. On some Moseley Associates equipment, shipping screws are required on the underside or topside of the chassis. In this case, printing on the chassis will indicate where such screws should be installed and secured.

Include any and all descriptions of the difficulties encountered with your equipment in the field. This will greatly assist us in processing your equipment and returning it as expeditiously as possible.

Use the original shipping carton in which your equipment was supplied if possible. Ensure that the carton is packed evenly and fully, with packing material filling any voids so that the chassis cannot shift inside the carton. Make

sure the carton is sealed properly with either nylon-reinforced tape or shipping sealing tape. Mark the outside of the carton "Electronic Equipment - Fragile" in big, red letters. This will assist the survival of the equipment in the shipping process. Again, bear in mind that the survival of the unit depends almost solely on the preparation taken in shipping it.

When returning your equipment to our factory, please address it to the following:

MOSELEY ASSOCIATES, INC.
Attn: Technical Services Department
111 Castilian Drive
Goleta, CA 93117

Display your return authorization number clearly on the shipping label, and insure the equipment for the appropriate amount.

SECTION 4

INSTALLATION

4.1 UNPACKING

The PCL-606/C Transmitter and Receiver should be carefully unpacked and inspected for shipping damage. Should inspection reveal any shipping damage, visible or hidden, immediately file a claim with the carrier. Keep all packing materials until the performance of the system is confirmed.

We recommend that the top covers of both the Transmitter and Receiver be removed for a superficial inspection of the internal components. This should ascertain that all modules, assemblies, and cables are mechanically secure.

Four screws are used to hold the FMO Synthesizer module in place during shipment. They should be removed from the top of the transmitter cover before installation. Retain these shipping screws and reinstall them if the Transmitter is to be moved. This will prevent damage to the modules inside.

CAUTION

Do not attempt any adjustments of any kind until the nature of each adjustment is understood.

Do not apply power to the Receiver until the procedure in Section 4.2 is completed.

Do not apply power to the Transmitter until the procedure in Section 4.2 is completed and a proper load is connected to the RF output.

Do not remove the covers on the transmitter RF Amplifier module.

Do not attempt disassembly or inspection of the receiver Preselector Filter module.

Replace the top covers. All adjustments normally used during installation and operation are accessible through the top covers.

4.2 LINE VOLTAGE SELECTION

The Transmitter and Receiver each have the capability of operating at one or four nominal ac power source voltages: 100, 120, 220, or 240 Vac, 50-60 Hz. The units are shipped for 120 Vac operation, unless otherwise specified.

The ac power connector on each unit contains a voltage selector card (PC card) and a fuse. The PC card can be inserted four different ways. Verify that the PC card is set for the line voltage to be supplied to the unit. The voltage selected can be observed on the PC card through the window in the ac power connector.

If the voltage selector card needs to be changed to match the available power, do the following: Unplug the power cord, and slide the access window to the left. Pull out the FUSE PULL lever and remove the fuse. With small needle-nose pliers, firmly grasp the PC card and remove it with a straight pull.

Select the operating voltage by orienting the PC card to position the desired voltage number on the top left side. Replace the PC card with the needle-nose pliers.

If the voltage selector card is changed, change the fuse in accordance with the following:

Line Voltage	Transmitter Fuse (A)	Receiver Fuse (A)
100	2	1
120	2	1
220	1	0.5
240	1	0.5

Return the FUSE PULL lever to its normal position and insert the fuse into the holders. Slide the window to the right and install the ac power cord.

4.3 PREINSTALLATION CHECKOUT

While the user has both the Transmitter and Receiver at the same location, we suggest that a preinstallation checkout of the system be performed before mounting the equipment in racks separated by many miles.

The minimum equipment to perform a bench test setup are:

1. An RF wattmeter with a measurement range of 5 to 12 watts (Bird 43, or equivalent).

2. A 50 Ohm, 10 watt dummy load for 950 MHz with 30 dB attenuation output capability (Sierra 661A-30, or equivalent).

3. A low-distortion audio signal generator (Tektronix SG505, or equivalent).

4. An audio distortion analyzer (Tektronix AA501, or equivalent).

5. Variable attenuator, 0 to 100 dB at 950 MHz (Kay Model 432D, or equivalent).

More extensive testing can be accomplished using a stereo generator and demodulator combination and/or a subcarrier generator and demodulator combination.

Observe these precautions when performing any bench test:

CAUTION

ALWAYS OPERATE THE TRANSMITTER TERMINATED INTO A PROPER 50-OHM LOAD.

ALWAYS ATTENUATE THE SIGNAL INTO THE RECEIVER TO LESS THAN 3000 MICROVOLTS (Approximately 75 dB attenuation between the Transmitter and Receiver).

Failure to observe these precautions can cause the transmitter final transistor to be destroyed, or the receiver preamplifier transistors may be damaged.

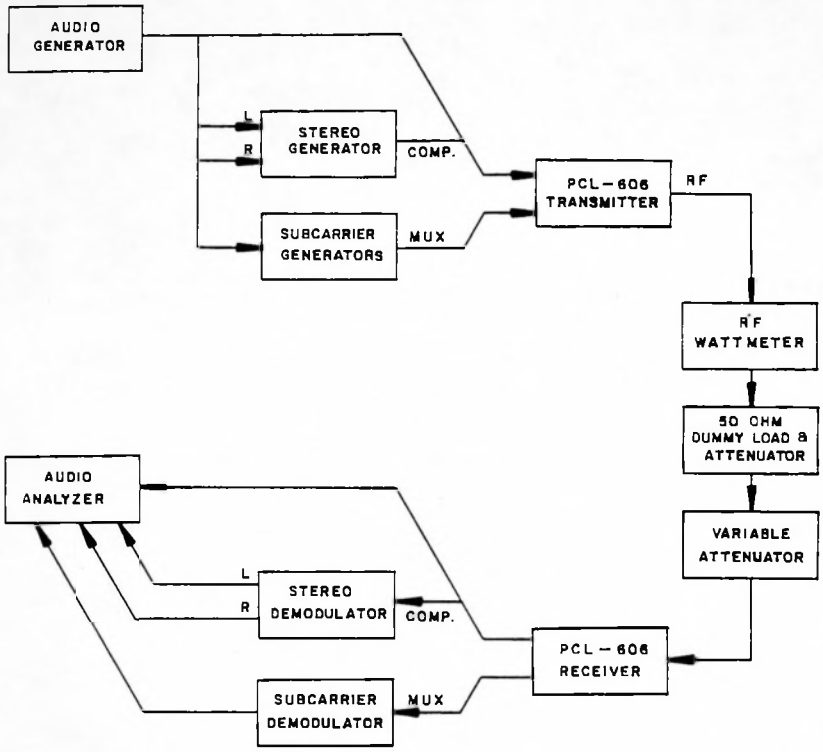

Figure 4-1. Typical bench test setup

Figure 4-1 shows one of several possible bench test setups.

With the wattmeter and dummy load installed, apply ac power to the Receiver. The three power indicator LEDs on the front panel will be green, indicating that the internal power supplies are operational. The OPERATE and SIGNAL LEDs will be red, indicating that there is no RF.

Apply ac power to the Transmitter and place the RADIATE/ STANDBY switch in the RADIATE position. The four power status LEDs will be green. The AFC LOCK and RADIATE LEDs will be red for several seconds and then turn green. Observe that the wattmeter will indicate between 5 to 8 watts and that the transmitter meter will provide readings of FWD POWER and REFL POWER. A brief period after the RADIATE LED becomes green, the OPERATE and SIGNAL LEDs on the Receiver will change from red to green. The RF LEVEL meter position on the Receiver may be selected to determine the strength of the RF signal applied to the receiver. Adjust the variable attenuator until an input signal strength of approximately 1000 microvolts is indicated. It should be mentioned that in any bench testing where the Transmitter and Receiver are in close proximity, there can be sufficient RF leakage from the cables to render computations of applied signal strength impractical based upon power and attenuation data.

Apply a 3.5 volt peak-to-peak signal (1.237 volts RMS) from the audio signal generator at 400 Hz to the composite input of the Transmitter. The PGM LEVEL at the transmitter and receiver meters may be selected and should indicate 0 on the dB scale. The output voltage from a composite output of the Receiver can be fed to an audio analyzer. The output voltage should be approximately 3.5 volts peak-to-peak (1.237 volts RMS). The audio input signal may be removed and the broadband signal-to-noise ratio (SNR) determined:

$$SNR = 20 \log_{10} \frac{\text{(RMS voltage with modulation)}}{\text{(RMS voltage without modulation)}}$$

Note: Demodulated stereo SNR will be approximately 12 dB greater than broadband SNR.

While this concludes the basic bench test of the units, the user may want to run further experiments to become familiar with the system. Sections 2, 5 and 6 should be consulted for a thorough understanding of the STL system before proceeding with any higher level testing. It must be noted that any testing for stereo performance must be accomplished with a very high quality stereo generator and stereo demodulator combination. The stereo generator and demodulator combination should be tested back to back to determine their performance independently of the STL link.

Receiver Selectivity Selection

When the receiver is shipped from the factory, it is normally set in the narrow IF mode. If you desire to operate the unit in the wide IF mode to decrease system distortion, the alignment procedures in Section 6 should be consulted for required adjustments. The specific alignments are in Section 6.3.6 (Distortion Alignment) and Section 6.3.7 (Stereo Separation).

4.4 RACK INSTALLATION

The PCL-606 units are designed for mounting in standard rack cabinets, preferably between waist and shoulder height. The Transmitter and Receiver have mounting holes for Chassis Trak C-300-5-1-14 chassis rack slides. If the rack will accept chassis rack slides, their use is recommended. If chassis rack slides are used, be sure to leave at least a 15-inch service loop in all cables to the equipment.

When mounting the Transmitter or Receiver in a rack, the unit must have an unobstructed free flow of air for cooling purposes across the rear cooling fins. Continued operation in a confined environment can cause the ambient temperature to exceed specification, resulting in reduced life or catastrophic failure.

When two PCL-606 Receivers are in a system at a site, it is recommended that they be mounted adjacent to each other in the rack. This will facilitate automatic switchover interconnect. When a PCL-606 Receiver is used with a PCL-505 or PCL-303 Receiver, a transfer panel (such as a TPR-2) must be used to accomplish automatic switchover, and should be mounted between the two receivers. Receiver automatic switchover interconnections are detailed in Section 4.9.2.

When two Transmitters are in a system at a site, an automatic transfer panel such as the TPT-2 should be mounted between them. The TPT-2 will allow interconnection of a PCL-606 with another PCL-606, PCL-505, or PCL-303 Transmitter and can provide automatic switchover in the event of a detectable failure in the Transmitter, as shown in Section 4.9.1.

4.5 ANTENNA INSTALLATION

The installation of the antennas and associated feed lines determines to a large extent the long-term reliable operation of the STL. Experience has indicated that a reasonably clear path having an 0.6 Fresnel zone clearance along with good feed-line installation results in a highly predictable signal level at the receiver. The appendix contains a series of instructions, calculation sheets, typical gain and loss characteristics, and nomographs to enable the received signal level to be predicted. Since the PCL-606 has a signal strength meter, it is possible to determine the quality of the antenna installation and path compared to the calculations.

Experience at 960 MHz has indicated that for reliable year-round operation with a predominately overland path and 0.6 Fresnel zone clearance, a 20 dB fade margin should be used. At least a 25 dB fade margin should be allowed if the path is over water or flat terrain with little vegetation.

4.6 TRANSMISSION CABLES

The transmission cable between antenna and Transmitter or Receiver should be coaxial cable whose loss characteristics are known. Typical quality low-loss foam dielectric lines such as Andrew LDF4-50, a 0.5 inch diameter cable, has a 2.4 dB loss per 100 feet at 950 MHz. This cable will generally be adequate where the total cable run (at both Transmitter and Receiver) is less than 300 feet, and there is a good transmission path of less than 10 miles.

When the total transmission cable length exceeds 300 feet, an obstructed or grazing path occurs, or the path length exceeds 10 miles, a lower loss cable such as Andrew LDF5-50, a 7/8 inch diameter cable with a loss of 1.4 dB per 100 feet, is recommended.

To reduce system losses, it is important to select type N connectors that are designed for the type of transmission cable used in the system. The connectors must then be installed in accordance with the manufacturer's recommendations. It sometimes will take only one improperly installed connector to reduce the received signal strength sufficiently to provide only marginal system performance.

Reasonable care should be exercised during the installation of the transmission cable. Never put a sharper bend radius in the cable than recommended by the manufacturer. Too sharp a bend can cause internal cable damage that is not observable on the outside of the cable. This damage can result in excessive loss in the cable. Since the higher quality transmission cables are relatively inflexible, Moseley Associates has available several short "pigtail" assemblies. These "pigtails" are designed to attach to the ends of the transmission cable and allow movement of the equipment or antenna with less chance of damaging the transmission cable itself. These "pigtails" and appropriate connectors are available in installation kits for the more popular types of transmission cable.

Figure 4-2 shows typical transmitter RF connections for the transmission cable to the antenna, and Figure 4-3 shows typical receiver RF connections.

Should it be desired to mount the antenna on a series-fed standard broadcast tower, the required isolation can be obtained with the installation of a Moseley Associates Isocoupler at the base of the series-fed antenna. Isolation at standard broadcast frequencies is high, and the Isocoupler introduces only approximately 1.5 dB loss at the STL frequency.

4.7 PROGRAM AND MULTIPLEX INSTALLATION - TRANSMITTER

Figure 4-4 depicts the typical interconnection of a PCL-606/C as would normally be found at the studio. The Left and Right program material is first passed through an automatic gain control (AGC) such as the Moseley TGR-340 to first establish the nominal system levels. This is followed by a frequency-conscious audio limiter, such as the Moseley TFL-280, to prevent overmodulation of the system as the result of the normal preemphasis curve used in FM broadcasts.

It is highly desirable that the gain control or limiting units for each channel be interconnected so that any processing that occurs on one channel is performed in the same manner on the other channel. Both TGR-340 and TFL-280 units, installed in pairs, can be interconnected to process both channels in the same manner. The channel requiring the most processing controls both units.

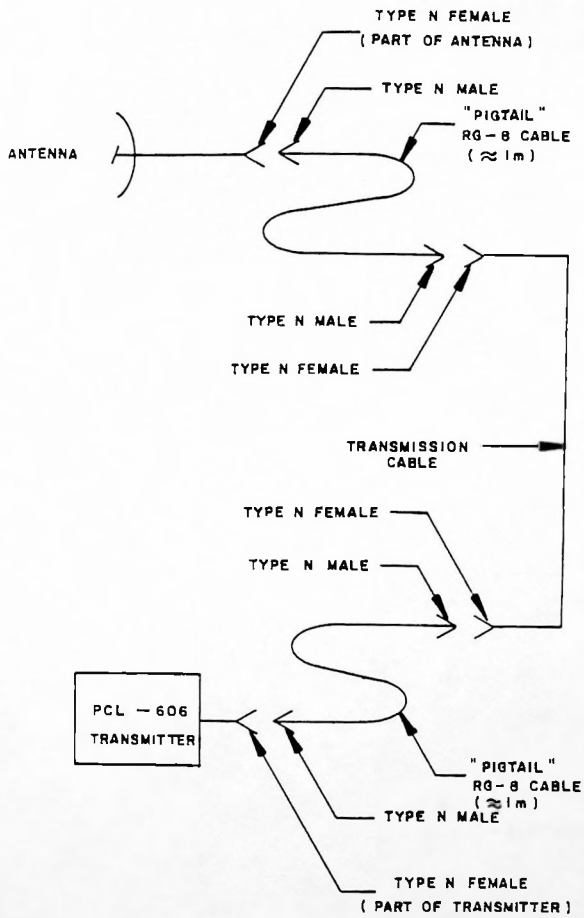

Figure 4-2

Typical PCL-606/C Transmitter RF Connects.

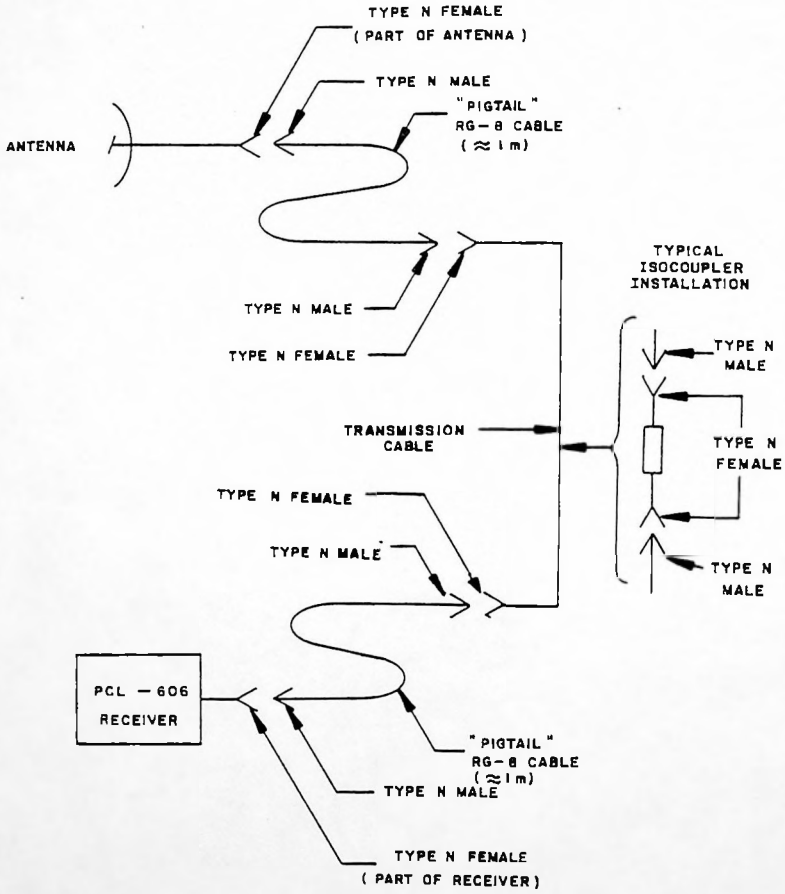

Figure 4-3

Typical PCL-606/C Receiver RF Connects.

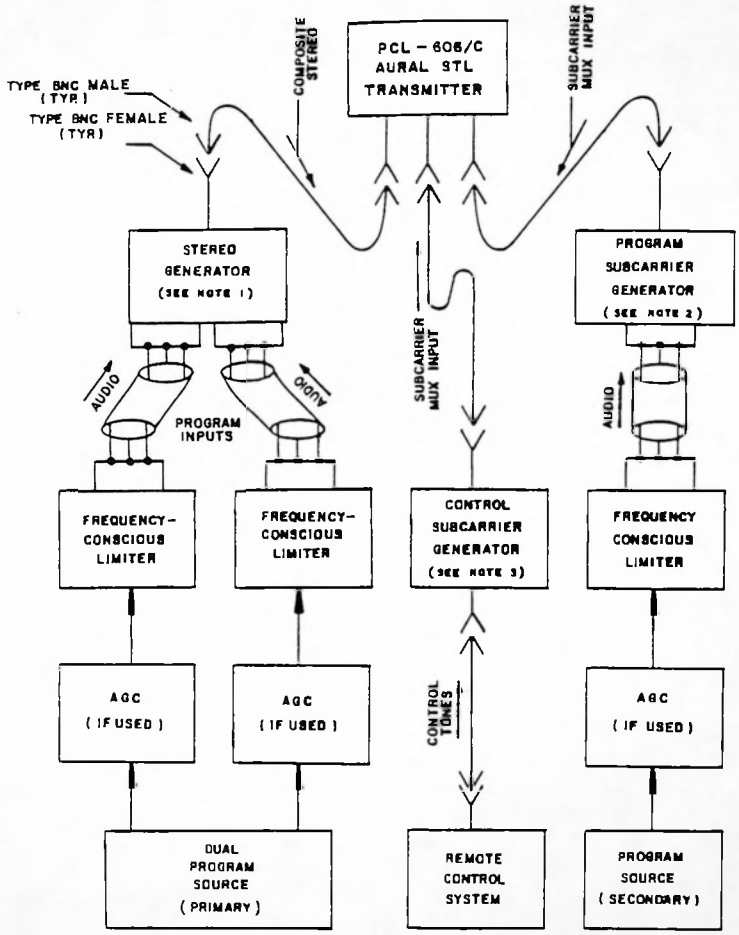

NOTES:

1. Stereo Generator may be Model SCG-9 or equivalent.
2. Program Subcarrier Generator may be Model SCG-8 or equivalent.
3. Control Subcarrier Generator may be part of Remote Control System.
4. Coaxial cable is RG-58 A/U or equivalent.

Figure 4-4

Transmitter Pgm and MUX Interconnect

The limiter outputs are then fed to a stereo generator such as the Moseley SCG-9A for conversion of the left and right channels into the standard FM composite base-band signal. The composite signal in then fed into the composite input of the PCL-606/C. The standard composite signal is unbalanced, 3.5 volts peak-to-peak, for 100 percent modulation. BNC connectors with type RG-58 A/U coaxial cable are generally used for the interconnection.

CAUTION

> Never overmodulate the STL transmitter, as this will cause increased distortion in the received signal and, possibly, interference to other users in the STL band.

The secondary program audio is generally passed through an AGC stage and/or a frequency conscious limiter into a subcarrier generator, such as the Moseley SCG-8, with a center frequency of 185 kHz. The subcarrier for the secondary program audio is fed to the PCL-606 MUX-2 subcarrier input with an unbalanced shielded cable (RG-58 A/U typical) with BNC connectors. An input level of 1.5 V p-p corresponds to a main carrier deviation of 7.5 kHz by the MUX-2 subcarrier.

Where a control subcarrier is desired, a subcarrier frequency of 110 kHz is typically used. The modulated subcarrier may be generated internally in the remote control equipment as in the case of the Moseley MRC series. In any case, the control subcarrier is applied to the MUX-1 input on the PCL-606 Transmitter with a peak-to-peak signal of 1.5 volts using BNC connectors on coaxial cable (RG-58 A/U typical). This signal will produce a main carrier deviation of 5 kHz by the MUX-1 subcarrier.

All inputs (composite and multiplex) into the PCL-606 Transmitter are wide-band inputs. It is assumed that the equipment supplying signals to be fed into the Transmitter contain the band limiting filters necessary to limit the signals to the spectrum for the intended use, ie, 30 Hz to 53 kHz for stereo composite, 110 kHz ±5 kHz for control subcarrier, and 185 kHz ±7.5 kHz for secondary program audio.

If the external equipment generates any spurious signals, these signals will be accepted by the Transmitter and passed to the Receiver. Any spurious signals may cause interference among the composite and subcarrier information, and may increase the occupied bandwidth to the extent that interference will be experienced by neighboring users in the STL Band.

4.8 PROGRAM AND MULTIPLEX INTERCONNECT - RECEIVER

At the outputs of the PCL-606/C Receiver, the audio-band output of the FM demodulator is split and filtered into two bands. The composite outputs are from 30 Hz to approximately 85 kHz. The multiplex outputs are bandpass filtered to pass the frequency range of 85 kHz to 220 kHz. But see notes on 100 kHz filter version on page 2-9.

Figure 4-5 depicts a typical interconnection of a PCL-606/C Receiver at the remote transmitter site. The unbalanced composite output, 3.5 volts peak-to-peak, is interconnected to the wide-band input of the Transmitter with coaxial cable (RG-58 A/U typical) with BNC connectors.

The secondary program audio (on the STL 185 kHz subcarrier) is demodulated by a unit such as the Moseley SCD-8. The baseband audio is passed to a subcarrier generator at 67 kHz, the normal SCA program carrier, which in turn is fed to the main transmitter multiplex input. The multiplex outputs may also be fed to the control subcarrier demodulator for use by the control system. Some control systems such as the Moseley MRC series have their own internal subcarrier demodulation capability, and an external demodulator is not required. Note that since both multiplex outputs contain the same 85 to 200 kHz spectrum, the subcarrier demodulators are required to further filter the spectrum as required for their individual purposes.

4.9 MAIN/STANDBY INTERCONNECT

The PCL-606 Transmitter and Receiver can be interfaced with other PCL-606, PCL-505 or PCL-303 systems to form a redundant backup system that provides for automatic changeover between equipment in the event a detectable failure occurs. The Moseley model TPT-2 (Transfer Panel Transmitter) is used to accomplish automatic switchover for transmitters in all combinations. The model TPR-2 (Transfer Panel Receiver) is required on all but PCL-606 to PCL-606 receiver combinations.

4.9.1 Transmitter Interconnect

When two transmitters are interconnected with a TPT-2 to form a main/standby pair, the composite and subcarrier generator output is routed to each transmitter in parallel. The RF output of each transmitter is routed to the respective RF input on the TPT-2. The transmission cable to the antenna is connected to the antenna type N connector of the TPT-2. Figure 4-6 details the interconnection of these signals. Important: For proper operation with a TPT-2, both transmitter RADIATE/ STANDBY switches should be in the STANDBY position. In addition, the interlock control between the transmitters and the TPT-2 should be wired as follows:

Interlock Control

TPT-2 Terminal	PCL-606	PCL-505	PCL-303
A	A10-J1-B	J1-B	J403-F
B	A10-J1-D	J1-D	J403-C
C	A10-J1-C	J1-C	J403-D
GND	A10-J1-A	J1-A	J403-A

4.9.2 Receiver Interconnect, PCL-606/C, PCL-606

A pair of PCL-606 Receivers used in a main/standby configuration can be interconnected to perform automatic switchover if a detectable failure occurs in the on-line Receivers. As shown in Figure 4-7, the antenna is routed to each Receiver through a power divider such as the Moseley model PD-1000. The use of a power divider is recommended so that the impedance as seen by each Receiver is approximately 50 ohms.

The composite and multiplex outputs are paralleled using a BNC "T" connector. This is permissible since the composite and multiplex outputs are switched internal to the Receiver. Only one of the Receivers at a time will have any output. The interlock control is achieved by first interconnecting the ground (GND) on the two Receivers. Then XFR IN of each Receiver is wired to XFR OUT of the other Receiver. GND, XFR IN, and XFR OUT are located on the barrier strip on the rear of the Receivers.

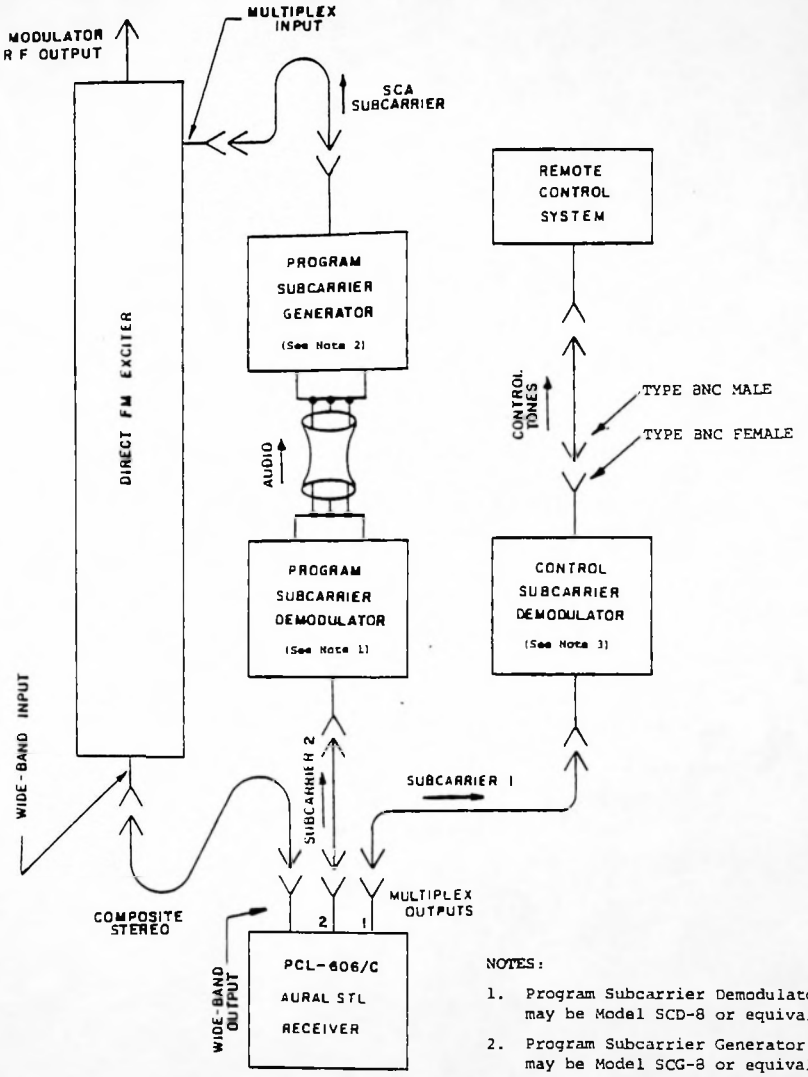

NOTES:

1. Program Subcarrier Demodulator may be Model SCD-8 or equivalent.
2. Program Subcarrier Generator may be Model SCG-8 or equivalent.
3. Control Subcarrier Demodulator may be part of Remote Control System.
4. Coaxial cable is RG-58 A/U or equal.

Receiver PGM and MUX Interconnect.

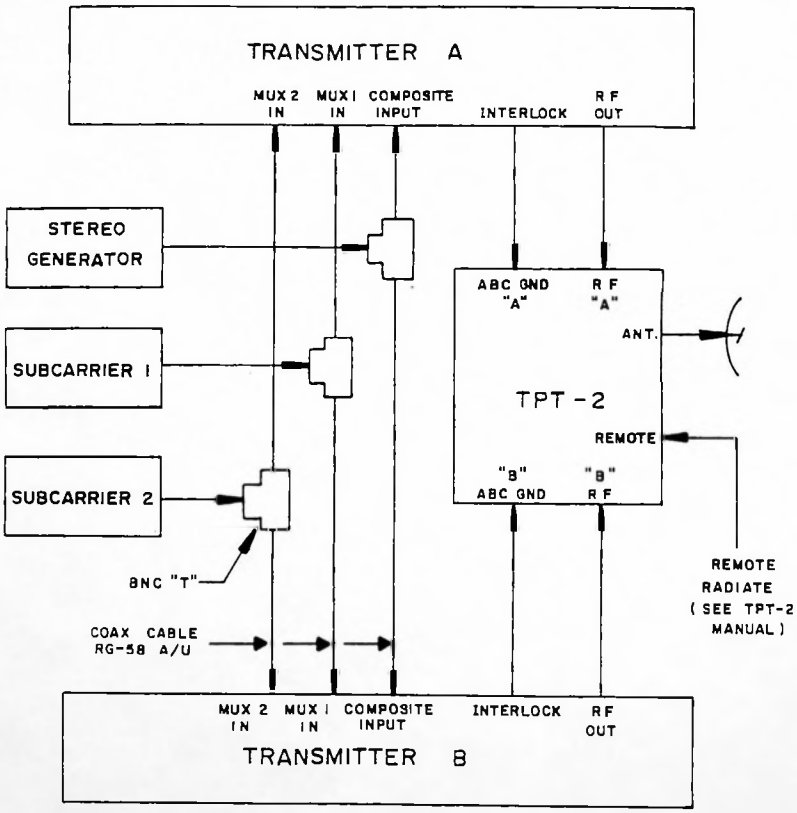

Figure 4-6

Main/Standby Transmitter Interconnect.

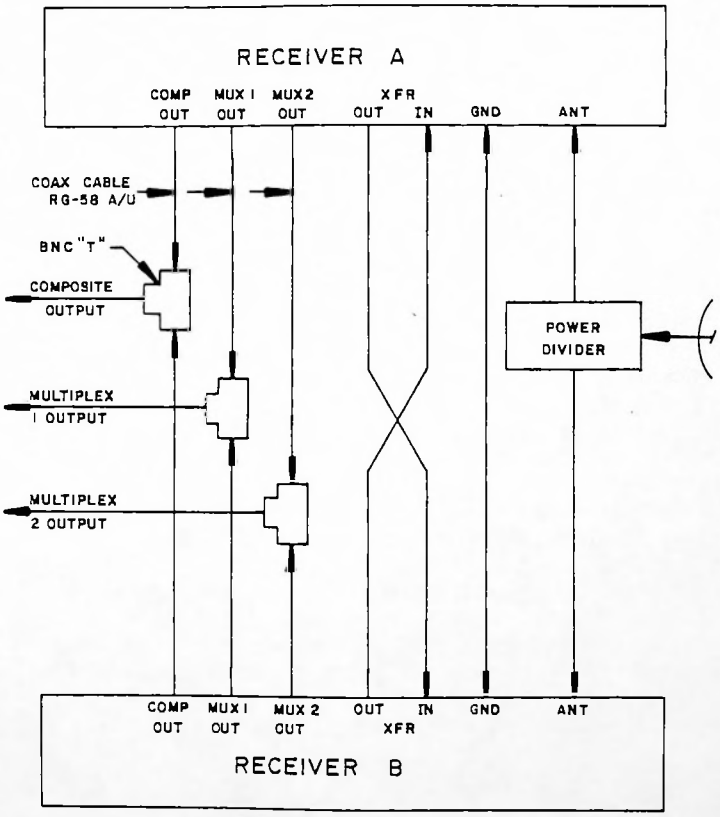

Figure 4-7

M/S Receiver Interconnect PCL-606-606

4.9.3 Receiver Interconnect, PCL-606/Other

The PCL-606 Receiver may be used with other Moseley STL receivers such as the PCL-505 and PCL-303 in a main/standby configuration provided that a TPR-2 (Transfer Panel Receiver) is used to perform the switching between the two receivers. A typical installation is detailed in Figure 4-8. Note that only one multiplex output can be used from the receivers; however, there are two parallel multiplex outputs on the TPR-2 to provide the control and secondary audio multiplex outputs.

4.10 REMOTE CONTROL OF THE STL TRANSMITTER

The PCL-606 transmitter has been designed to be operated by remote control. Radiate/standby control capability, as well as metering outputs for power and AFC, are built in.

Figure 4-9 shows the interconnections required for remote control of the transmitter. All connections to the transmitter are made via A10-J1 on the rear of the unit. The interconnecting cable should have not more than a few hundred ohms resistance per conductor. The panel itself is shown schematically; this entire assembly is available from Moseley Associates as the Model ECP-5 Extension Control Panel.

The RADIATE/STANDBY switch will place the transmitter in a radiating condition when closed. It is electrically interconnected with the control switch on the transmitter itself, which should be placed in STANDBY for remote control operation. The AFC and Output meters give relative indications of these two parameters. The two calibration potentiometers are set to give a suitable meter deflection, as for example, half-scale.

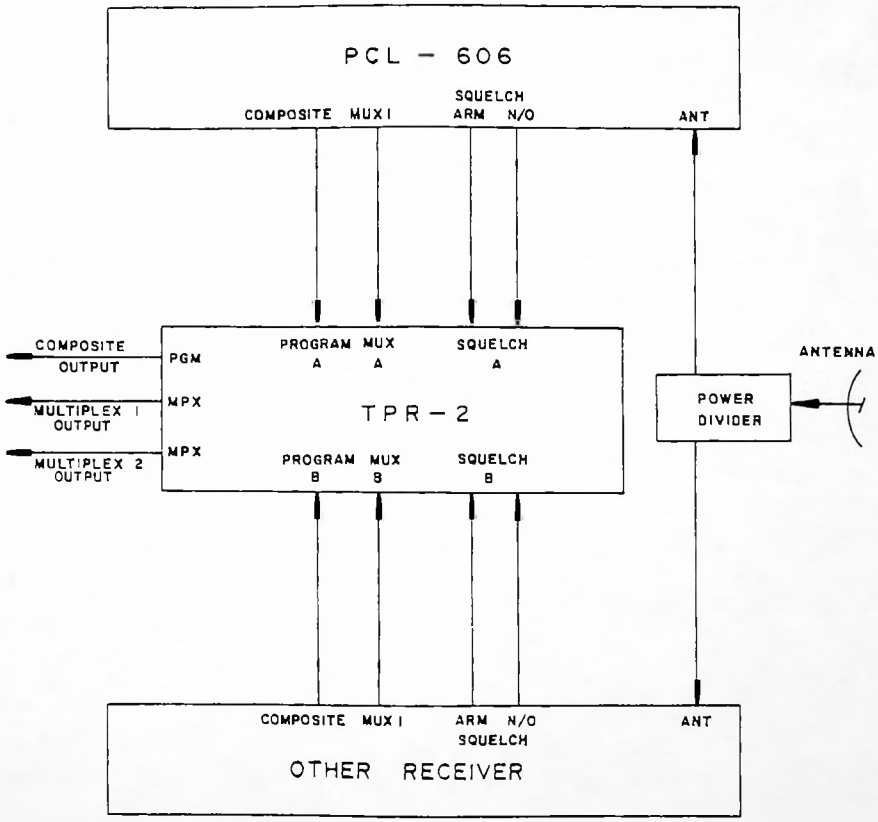

Figure 4-8

M/S Receiver Interconnect 606/Other

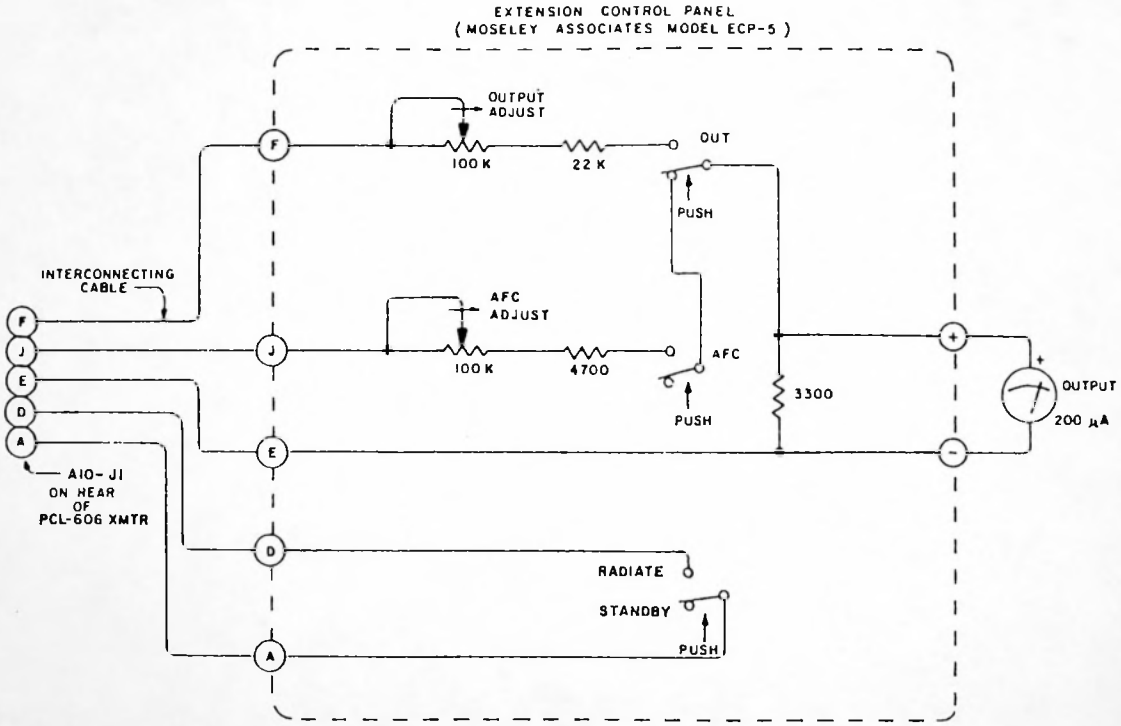

Figure 4-9

Ext. Control Panel Connector

SECTION 5

MODULE CHARACTERISTICS

5.1 INTRODUCTION

This section provides theory of operation, schematics, and parts lists for the PCL-606/C modules.

5.2 MODULE DESCRIPTIONS

The modules are discussed in the following order:

TRANSMITTER

A. Composite Audio Processor
B. FMO Synthesizer
C. Up Converter
D. First Local Oscillator and Multiplier
E. RF Amplifier
F. Metering and Status
G. Transmitter Control
H. Power Supply

RECEIVER

I. Preselector Filter
J. Preamplifier and First Mixer
K. First Local Oscillator and Multiplier
L. Double Converter
M. Second and Third Local Oscillator
N. FM Demodulator
O. Composite Baseband Processor
P. Metering and Status
Q. Mute and Transfer
R. Power Supply

COMPOSITE AUDIO PROCESSOR

Schematic 91D7282
Parts List 20D2831

The Composite Audio Processor module sets the proper amplitude relationship between the three input signals: composite, MUX 1 and MUX 2. The composite signal is amplified by U4 and the MUX signals by U3. These signals are then linearly combined by U2 into one composite signal, which is sent to the FMO to frequency modulate the transmitter carrier.

With a 3.5 V p-p composite signal at J3, PROGRAM LEVEL control R31 is used to set the output level at J2 (baseband out) to 3.5 V p-p. This corresponds to 50 kHz deviation of the carrier frequency. With a 1.5 V p-p 110 kHz subcarrier input at J4, MUX 1 LEVEL control R28 is used to set the output level at J2 to 0.35 V p-p, which represents 5 kHz carrier deviation by this subcarrier. With a 1.5 V p-p 185 kHz subcarrier level at J5, MUX 2 LEVEL control R24 is used to set the output level at J2 to 0.525 V p-p, which equals 7.5 kHz carrier deviation by this subcarrier. All level adjustment controls possess enough range to accommodate a ±4 dB range in input levels from the nominal levels previously defined.

A signal phase select switch is incorporated to ensure a noninverted system baseband phase relationship (input of transmitter to output of receiver). For 950 MHz band operation, this switch should be in position "B." Output samples from this module are also sent to the front panel Metering and Status module for indication of modulation levels. J1-12 carries composite meter information and J1-9 transmits MUX meter levels.

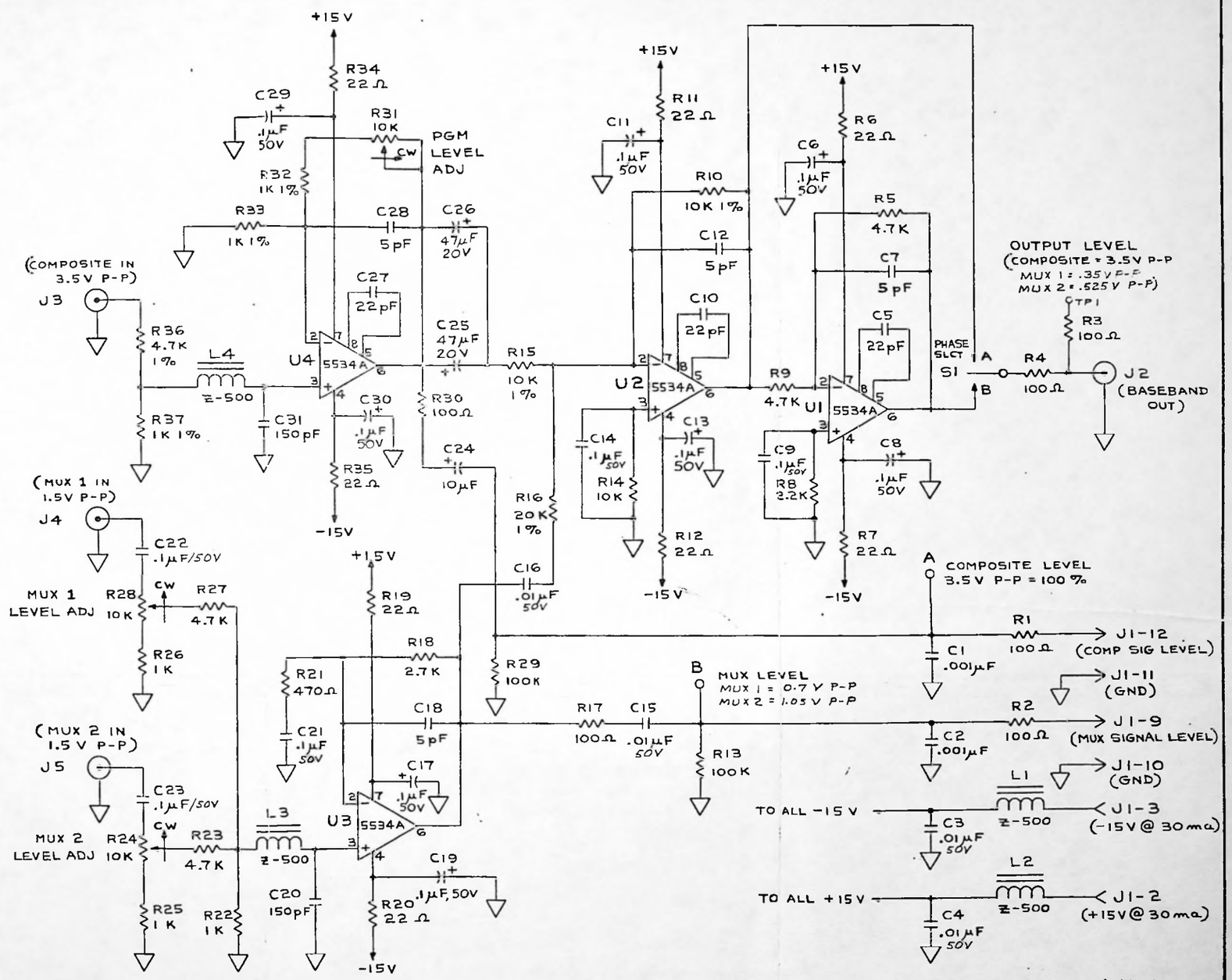

NOTES:

1. UNLESS OTHERWISE SPECIFIED, RESISTORS ARE IN OHMS, 1/4 W, 10%
   CAPACITORS ARE IN MICROFARADS
2. P C BD 51D5948
3. COMPONENT LAYOUT 20D2831
4. POINTS "A" AND "B" ARE DIAGNOSTIC TEST POINTS

USED ON: PCL-606 TRANSMITTER

MOSELEY ASSOCIATES, INC.
SANTA BARBARA RESEARCH PARK
GOLETA CALIFORNIA 93117

SCHEMATIC – COMPOSITE AUDIO PROCESSOR

91D7282 C

91D7282

PRINT PHANTOM ITEMS
PRINT COMPONENTS
PRINT PHANTOM/COMPONENT COMMENTS

PARENT ITEM	CROSS REF ITEM	DESCRIPTION	BATCH QTY	ITEM TYPE	LOW LEVEL
9301318		COMP AUDIO PROCESSOR PCL-606TX ENGR DRAW 20D2831 K	1	1 UNIT MEAS EA	03 PLANNER 440

BOM ITEM	LL CD	COMPONENT & CROSS REF.	DESCRIPTION & COMMENT	ENGINEERING DRAWING NUMBER		QUANTITY PER	UM	ITEM TYP	OPT NBR	FIRST OP SEQ	LT ADJ	EFFECTIVE DATES FROM	TO
	05	1050129	SCR PNHD PHPS 4/40 X 1/4 SST	PAN HEAD		2.000	EA	4					
1	04	3473147	PCB COMP AUDIO PROC PCL-606	5105948	F	1.000	EA	9					
2	05	2090967	FRAME BASE, MODULE PCL 606	0502867	C	1.000	EA	2					
3	04	2091056	FRAME AUD PROC PCL 605 XMTR	0502876	D	1.000	EA	2					
5	05	2093975	COVER, MODULE PCL 605	0502868	C	2.000	EA	2					
6	05	3190253	SW SLD S1	23 021 114		1.000	EA	4					
7	06	3730728	IC NE5534AN OPAMP LO NOISE U1,U2,U3,U4	NE-5534AN		4.000	EA	4					
8	06	3250016	SKT DUAL IN LINE 8 PIN U1,U2,U3,U4	640463-1		4.000	EA	4					
9	05	4030695	POT CER PC PIN 10K OHM .75W20T R24,R29,R31	43P103		3.000	EA	4					
10	04	4510301	RES 1.00K OHM 1/8W 1% R32,R33,R37	RN55D1001F		3.000	EA	4					
11	04	4510095	RES 4.75K OHM 1/8W 1% R36	RN55C4751F		1.000	EA	4					
12	06	4510145	RES 10.0K OHM 1/8W 1% R10,R15	RN55C1002F		2.000	EA	4					
13	05	4510160	RES 20.0K OHM 1/8W 1%. R16	RN55E2002F		1.000	EA	4					
14	06	4410122	RES 100 OHM 1/4W 10% R1,R2,R3,R4,R17,R30	RC07GF101K		6.000	EA	4					
15	06	4410049	RES 22 OHM 1/4W 10% C5,C7,C11,C12,C19,C20,C34,C35	RC07GF220K		8.000	EA	4					
16	06	4410205	RES 470 OHM 1/4W 10% R21	RC07GF471K		1.000	EA	4					
17	05	4410247	RES 1K OHM 1/4W 10% R22,R25,R26	RC07GF102K		3.000	EA	4					
18	05	4460242	RES 4.7K OHM 1/4W 5% R5,R9,R23,R27	RC07GF472J		4.000	EA	4					
19	05	4410296	RES 2.7K OHM 1/4W 10% R16	RC07GF272K		1.000	EA	4					
20	06	4410379	RES 10K OHM 1/4W 10% R14	RC07GF103K		1.000	EA	4					
21	06	4410494	RES 100K OHM 1/4W 10% R13,R29	RC07GF104K		2.000	EA	4					
22	06	4410288	RES 2.2K OHM 1/4W 10% R8	RC07GF222K		1.000	EA	4					
23	05	1130491	WASHER, SST 5710-35-16	5710-35-16		4.000	EA	4					

PRINT PHANTOM ITEMS
PRINT COMPONENTS
PRINT PHANTOM/COMPONENT COMMENTS

PARENT ITEM 9301318 | CROSS REF ITEM | DESCRIPTION COMP AUDIO PROCESSOR PCL-606TX K | ENGR DRAW 2002831 | BATCH QTY 1 | ITEM TYPE 1 | UNIT MEAS EA | LOW LEVEL 03 | PLANNER 440

BOM ITEM	LL CD	COMPONENT & CROSS REF.	DESCRIPTION & COMMENT	ENGINEERING DRAWING NUMBER	QUANTITY PER	UM	ITEM TYP	OPT NUM	FIRST UP SEQ	LT ADJ	EFFECTIVE DATES FROM	TO
24	06	4020467	FERROX CUBE 500 OHM L1,L2,L3,L4	VK200 10/3B	4.000	EA	4					
26	05	3090230	CONN MALE RT ANGLE PC SNAP ON J2,J3,J4,J5	17-1246-000	4.000	EA	4					
27	06	3090222	CONN EDGE 12PIN J1	1-87233-2	1.000	EA	4					
28	06	3290152	TEST JACK WHITE R ANGLE TP1	430-101	1.000	EA	4					
30	06	4210943	CAP MICA DIP 5PF +/- 0.5 C7,C12,C18,C28	DM-15-0500	4.000	EA	4					
31	06	4210100	CAP MICA DIP 22PF 5% C5,C10,C27	DM-15-220J	3.000	EA	4					
32	06	4210308	CAP MICA DIP 150PF 5% C20,C31	DM-15-151J	2.000	EA	4					
33	06	4310264	CAP .1 50V 1042 C6,C8,C9,C11,C13,C14,C17,C19,C21,C22,C23,C29, C30	5020E550R0104	13.000	EA	4					
34	06	4310272	CAP .01 50V 103M C3,C4,C15,C16	5018EM50R0103K	4.000	EA	4					
35	05	4310108	CAP CER DISC .001/1KV C1,C2	DD-102G	2.000	EA	4					
37	06	4280079	CAP EPOX-DIP 10/25V C24	196D106X0025KAI	1.000	EA	4					
38	06	4280137	CAP EPOX-DIP 47/20V C25,C26	196D476X0020PE4	2.000	EA	4					
40	05	1310093	CLIP PCL-606	05C2892 B	16.000	EA	4					

FMO SYNTEHSIZER

Schematic 91D7283
Parts List 20D2854

The FMO Synthesizer module consists of three main subgroups: the RF group, the digital group, and the loop filter. The RF group includes the oscilaltor (FMO), buffer, reference oscillator, and low-pass filter. The digital group includes a level translator, a presettable divide-by-N counter, and a phase/frequency comparator.

These three groups provide a functional module that has good short-term stability, low noise, and is tunable over a wide frequency range. Selecting the appropriate divide ratio synthesizes the crystal-controlled reference oscillator and ensures long-term stability.

The FMO (frequency modulated oscillator) consists of low-noise field effect transistor Q4 in an RF grounded base configuration. The drain of Q4 is connected to the resonant circuit inductor and capacitors. The capacitance for this circuit is provided by C42, C43, C44, and C45. The inductance consists of a stripline inductor on the PC board. Feedback to cause oscillation is from the drain to the source consisting of C44 and C45. The normal frequency range of the oscillator is 60 to 80 MHz.

Modulation is applied to CR9, which is a variable capacitance diode. CR9 is coupled to the resonant circuit by C42. R44 adjusts the bias on CR9 and is set for minimum modulation distortion, usually approximately -5 volts. R53 adjusts the amount of modulation on the bias voltage applied to CR9. 3.5 V peak-to-peak input at J4 will produce 100% modulation (50 kHz deviation).

Integrated circuit U11 is a buffer amplifier and drives Q1 and low-pass filter L5 and L6, which attenuate the harmonics of the FMO. The frequency stability of the FMO is maintained by CR8, which is attached to the stripline inductor through C39. A voltage generated by the AFC circuitry changes the capacitance of CR8, which is also part of the tuning of the FMO resonant circuit. This AFC circuitry changes the capacitance of CR8, which is also part of the tuning of the FMO resonant circuit. This AFC voltage is dervied by phase comparing the divided output of the FMO with the divided output of a crystal reference oscillator.

Q1 is a buffer amplifier which acts as a level translator to TTL levels to drive U6. U6 is a decade counter prewired to divide by 10. Its output is connected to the input of a four-decade presettable divide-by-N counter, U1 through U4. Setting of the divide ratio is done by S1 through S4. S1 sets the most significant digit. The overall divide ratio may be set to any number up to 99,990. The usual divide ratios are 60,000 to 80,000, which will lock the FMO between 60 MHz and 80 MHz.

U5 is a five-input NOR gate used to drive the load line. It is connected so that the counter divides by N exactly. Since the duration of the load pulse is too short to drive phase/frequency comparator U9, it is stretched to approximately 50% duty cycle by U7. U7 is a nonretriggerable one-shot. The frequency of the square wave at pin 14 of U9 is 1 kHz when the AFC is locked.

Crystal Y1, Q3 and Q2 comprise a reference oscillator and buffer. Frequency Trim control C21 is used to set the output frequency of this oscillator to 4.096 MHz. This is divided by 4096 in U8, which delivers a 1kHz reference frequency to pin 3 of phase/frequency comparator U9.

The average dc voltage at the output of U9 pin 13 is internally biased to half the supply voltage, and deviates from this by an amount which is proportional to the phase difference of the two 1kHz signals at pins 3 and 14.

Loop filter U10 is an integrating low-pass filter that removes most of the 1kHz component of the phase comparator output. It also provides dc gain to decrease the very low frequency noise of the FMO. Further filtering of the AFC voltage is then delivered to CR8 through R54, closing the AFC loop. AFC level adjust C43 is used to place the phase-locked loop in the center of its operating control range. This is indicated by a nominal +7 V level at TP1 (AFC Level).

The average voltage at U9 pin 1 is +5 V when the loop is locked. If the loop becomes unlocked, the average voltage drops to 2.5 V. This causes the output of U10 pin 1 to change from plus to minus, which lights the red LOSS OF LOCK LED on the module. When lock is lost, the voltage at J1-11 and J11-12 drops from +5 V to 0 V, causing the 12.5 V power supply voltage to drop to 1.5 V, which removes the 8watt RF output.

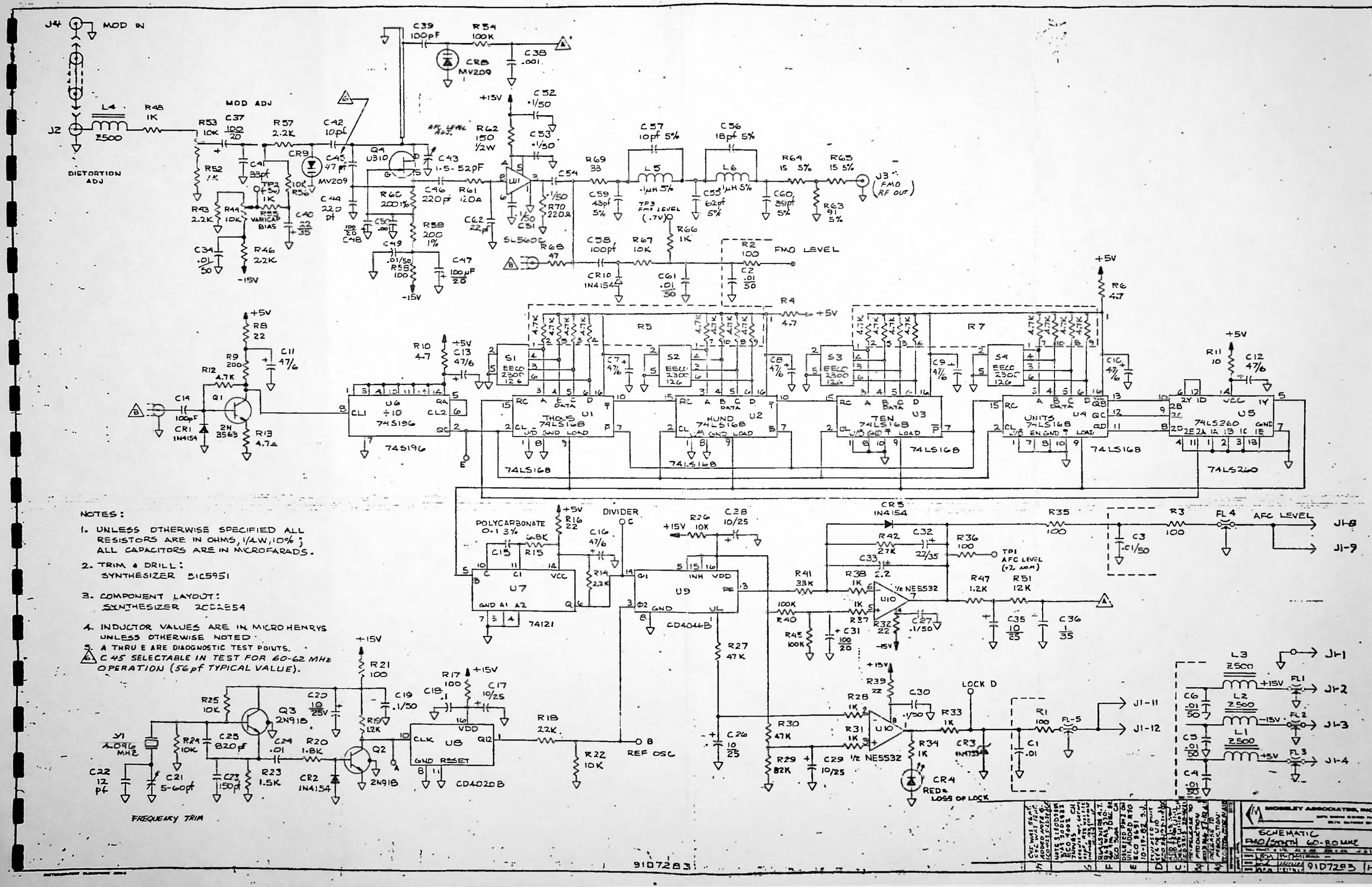
J4 MOD IN
J2
L4 2500
R48 1K
DISTORTION ADJ
MOD ADJ
R53 10K
C37 100/20
R57 2.2K
C42 10pf
C41 33pf
CR9 MV209
TP2 (+5V)
R55 1K VARICAP BIAS
R56 10K
C40 22/35
R52 1K
R43 2.2K
R44 10K
R46 22K
C34 .01/50
-15V
Q4 U310
C43 1.5-52pF
C45 47pf
C44 220 pf
C48 100/20
C50 .001
R60 200 1%
C46 220pf
R61 120Ω
R59 200 1%
C49 .01/50
R58 100
C47 100µF 20
C39 100pF
R54 100K
CR8 MV209
C38 .001
+15V
C52 .1/50
C53 .1/50
R62 150 1/2W
AFC LEVEL ADJ.
U1 SL560C
C54 .1/50
C51 .1/50
R70 220Ω
C62 22pf
R68 47
C57 10pf 5%
L5 .1µH 5%
C56 18pf 5%
L6 .1µH 5%
R69 33
C59 43pf 5%
C55 62pf 5%
C60 39pf 5%
R64 15 5%
R65 15 5%
R63 91 5%
J3 FMD RF OUT
TP3 FMD LEVEL (.7V)
R66 1K
C58 100pf
R67 10K
CR10 1N4154
C61 .01/50
R2 100
FMD LEVEL
C2 .01/50
R6 4.7
R4 4.7
R5
R7
S1 EECO 2300 126
S2 EECO 2300 126
S3 EECO 2300 126
S4 EECO 2300 126
C7 4/6
C8 4/6
C9 4/6
C10 4/6
R10 4.7
C13 47/6
R8 22
C11 47/6
R9 200
R12 4.7K
Q1 2N3563
C14 100pF
CR1 1N4154
R13 4.7Ω
U6 ÷10 74S196
U1 THOUS 74LS168
U2 HUND 74LS168
U3 TEN 74LS168
U4 UNITS 74LS168
U5 74LS260
R11 10
C12 47/6
POLYCARBONATE 0.1 3%
C15 6.8K
R15
R16 22
C16 47/6
R14 2.2K
U7 74121
DIVIDER
R26 10K
C28 10/25
U9 CD4046B
R27 47K
C26 10/25
R30 47K
R29 82K
C29 10/25
CR5 1N4154
R42 27K
C32 22/35
C33 2.2
R36 100
TP1 AFC LEVEL (.72 VDC)
R35 100
R3 100
FL4
AFC LEVEL
J1-8
J1-9
C3 .01/50
R41 33K
R38 1K
U10 1/2 NE5532
R37 1K
R32 22
C27 .1/50
R47 1.2K
R51 12K
C35 10/25
C36 1/35
100K R40
R45 100K
C31 100/20
R39 22
R28 1K
C30 .1/50
R31 1K
R33 1K
R34 1K
CR3 1N753A
CR4 RED= LOSS OF LOCK
LOCK D
R1 100
FL-5
C1 .01
J1-11
J1-12
L3 2500
L2 2500
L1 2500
C6 .01/50
C5 .01/50
C4 .01/50
FL1
FL2
FL3
J1-1
J1-2
J1-3
J1-4
+15V
-15V
+5V
R21 100
R17 100
C17 10/25
C18 .1
C19 .1/50
C20 10/25V
R25 10K
Q3 2N918
R19 12K
Y1 4.096 MHz
R24 10K
C25 820pf
C24 .01
R20 1.8K
C22 12 pf
C21 5-60pf
C23 150pf
R23 1.5K
CR2 1N4154
Q2 2N918
U8 CD4020B
R18 22K
R22 10K
B REF OSC
FREQUENCY TRIM
NOTES:
1. UNLESS OTHERWISE SPECIFIED ALL RESISTORS ARE IN OHMS, 1/4W, 10%; ALL CAPACITORS ARE IN MICROFARADS.
2. TRIM & DRILL: SYNTHESIZER 51C5951
3. COMPONENT LAYOUT: SYNTHESIZER 2CC2854
4. INDUCTOR VALUES ARE IN MICROHENRYS UNLESS OTHERWISE NOTED.
5. A THRU E ARE DIAGNOSTIC TEST POINTS.
6. C 45 SELECTABLE IN TEST FOR 60-62 MHz OPERATION (56pf TYPICAL VALUE).
MOSELEY ASSOCIATES, INC.
SCHEMATIC FMO/SYNTH 60-80 MHz
91D7283 H
91D7283

PRINT PHANTOM ITEMS
PRINT COMPONENTS
PRINT PHANTOM/COMPONENT COMMENTS

PARENT ITEM 9301516 | CROSS REF ITEM | DESCRIPTION COMP ASSY FMD/SYNTH 60-30 MHZ ENGR DRAW 2002854 M | BATCH QTY 1 EFFEC 9/11/84 | ITEM TYPE 1 UNIT MEAS EA | LOW LEVEL 04 PLANNER 440

BOM ITEM	LL CO	COMPONENT & CROSS REF.	DESCRIPTION & COMMENT	ENGINEERING DRAWING NUMBER		QUANTITY PER	ITEM UM	ITEM TYP	OPT NBR	FIRST OP SEQ	LT ADJ	EFFECTIVE DATES FROM	TO
1	05	3473170	PCB FMD/SYNTH PCL-606	51D5951	E	1.000	EA	9					
2	05	3250370	SKT IC TO-5 8 PIN U11	SD-5173		1.000	EA	4					
3	05	3150133	SW TOP BCD ROT OUTPUT DRG S1,S2,S3,S4	2300126		4.000	EA	4					
4	06	3290152	TEST JACK WHITE R ANGLE TP1,TP2,TP3	430-101		3.000	EA	4					
5	05	3390549	LED RED 2.0&20 WIDE RT/HOLDER CR4	550-0406		1.000	EA	4					
6	05	3340775	XTAL 4.096 HC-25 FMC PCL-606 Y1	30A0073	A0	1.000	EA	4					
7	05	3250495	SKT,PIN,.0850DX.200L,GOLD PIN. Y1	450-3286-01-03		2.000	EA	4					
8	06	3250016	SKT DUAL IN LINE 8 PIN U10	640463-1		1.000	EA	4					
9	06	3250024	SKT DUAL IN LINE 14 PIN U5,U6,U7	640357-1		3.000	EA	4					
10	06	3250032	SKT DUAL IN LINE 16 PIN U1,U2,U3,U4,U8,U9	640358-1		6.000	EA	4					
11	05	3661121	IC DEC/BI-QUIN COUNT/LATCH U5	74S196		1.000	EA	4					
12	05	3680261	IC BIN COUNT/DIVIDER U8	CD4020BE		1.000	EA	4					
13	05	3683253	IC PHASE-LOCKED LOOP U9	CD4046BE		1.000	EA	4					
14	05	3650388	IC SN7421N MONOMULTI ST U7	SN7421N		1.000	EA	4					
15	05	3660966	IC SN74LS260N DU 5IN NOR U5	SN74LS260N		1.000	EA	4					
16	05	3661105	IC DEC 4BIT UP/DWN SYNC COUNT U1,U2,U3,U4	N74LS168AN		4.000	EA	4					
17	05	3730967	IC DUAL OP AMP U10	NE5532AN		1.000	EA	4					
18	05	3730769	IC SL560C U11	SL560C		1.000	EA	4					
19	05	4020640	IDCTR MINI-RED .1 UH 5% L5,L6	MR .10 5%		2.000	EA	4					
20	06	4020457	FERROX CUBE 500 OHM L1,L2,L3,L4	VK200 10/3B		4.000	EA	4					
21	05	3640307	XT U310 Q4	U310		1.000	EA	4					
22	05	3630076	XT NS2N3563 .24600M030V50M2P Q1	2N3563		1.000	EA	4					
23	05	3630001	XT NS2N918 .4W500M030V50M2P Q2,Q3	2N918		2.000	EA	4					

PRINT PHANTOM ITEMS
PRINT COMPONENTS
PRINT PHANTOM/COMPONENT COMMENTS

PARENT ITEM 9301516 | CROSS REF ITEM | DESCRIPTION COMP ASSY FMD/SYNTH 50-80 MHZ ENGR DRAW 2002854 M | BATCH QTY 1 EFFEC 9/11/84 | ITEM TYPE 1 UNIT MEAS EA | LOW LEVEL 04 PLANNER 440

BOM ITEM	LL CD	COMPONENT & CROSS REF.	DESCRIPTION & COMMENT	ENGINEERING DRAWING NUMBER	QUANTITY PER	UM	ITEM TYP	OPT NBR	FIRST OP SEQ	LT ADJ	EFFECTIVE DATES FROM	TO
24	05	3610250	DIO 30V 6/30 PF T092 MV209 CR8,CR9	MV209	2.000	EA	4					
25	05	3600178	DIO ZIN4733A 5.1V 1W 5% AIAY CR3	IN4733A Z5.1A	1.000	EA	4					
26	06	3600145	DIO IN4154 25V 4NS SI DO35 CR1,CR2,CR5,CR10	IN4154	4.000	EA	4					
27	05	4250486	CAP POLYCARB .1/100V 3% C15	22UB104H	1.000	EA	4					
28	05	4350401	CAP CHIP 100 PF C39	100B101JP500X	1.000	EA	4					
29	06	4210100	CAP MICA DIP 22PF C62	DM-15-220J	1.000	EA	4					
30	06	4410130	RES 120 OHM 1/4W 10% R61	RC07GF121K	1.000	EA	4					
31	05	4370359	CAP VAR 1.5-52 PF PC43G520 C43	JFDNMC624	1.000	EA	4					
32	05	4350500	CAP 5-60 PF C21	GX060000	1.000	EA	4					
33	06	4210530	CAP MICA DIP 820PF C25	DM-15-821J	1.000	EA	4					
34	06	4210308	CAP MICA DIP 150PF C23	DM-15-151J	1.000	EA	4					
35	05	4210068	CAP MICA DIP 12PF C22	DM-15-120J	1.000	EA	4					
36	06	4210266	CAP MICA DIP 100PF C14,C58	DM-15-101J	2.000	EA	4					
37	05	4210064	CAP MICA DIP 18PF C56	DM-15-180J	1.000	EA	4					
38	05	4210555	CAP MICA DIP 10PF 5% C57	DM15-100J	1.000	EA	4					
39	05	4210217	CAP MICA DIP 62PF C55	DM-15-620J	1.000	EA	4					
40	05	4210175	CAP MICA DIP 43PF C59	DM-15-430J	1.000	EA	4					
41	05	4210142	CAP MICA DIP 33PF C41	DM-15-330J	1.000	EA	4					
42	05	3291069	FILTER FEED THRU FL1,FL2,FL3,FL4,FL5	859657-1	5.000	EA	4					
43	06	4280046	CAP EPOX-DIP 2.2/35V 20% C33	196D225X0035JAI	1.000	EA	4					
44	06	4280038	CAP EPOX-DIP 1/35V C36	196D105X0035HAI	1.000	EA	4					
45	05	4210167	CAP MICA DIP 39PF C60	DM-15-390J	1.000	EA	4					

PRINT PHANTOM ITEMS
PRINT COMPONENTS
PRINT PHANTOM/COMPONENT COMMENTS

PARENT ITEM	CROSS REF ITEM	DESCRIPTION	BATCH QTY	ITEM TYPE	LOW LEVEL
9301516		COMP ASSY FMO/SYNTH 60-80 MHZ	1	I	04
		ENGR DRAW 2002854 M	EFFEC 9/11/84	UNIT MEAS EA	PLANNER 440

BOM ITEM	LL CO	COMPONENT & CROSS REF.	DESCRIPTION & COMMENT	ENGINEERING DRAWING NUMBER	QUANTITY PER	UM	ITEM TYP	OPT NBR	FIRST OP SEQ	LT ADJ	EFFECTIVE DATES FROM	TO
46	05	4280095	CAP EPOX-DIP 22/35V C32,C40	196D226X9035PE4	2.000	EA	4					
47	05	4280152	CAP EPOX-DIP 100/20V C31,C37,C47,C48	196D107X9020TE4	4.000	EA	4					
48	06	4280079	CAP EPOX-DIP 10/25V C17,C20,C26,C28,C29,C35	196D106X0025KAI	6.000	EA	4					
49	05	4280129	CAP EPOX-DIP 47/6V C7,C8,C9,C10,C11,C12,C13,C16	196D476X0006JAI	8.000	EA	4					
50	05	4310272	CAP .01 50V 103M C1,C2,C3,C4,C5,C6,C24,C34,C49,C61	5018EM50RD103K	10.000	EA	4					
51	06	4310264	CAP .1 50V 1042 C18,C19,C27,C30,C51,C52,C53,C54	5020ES50RD104	8.000	EA	4					
52	05	2201119	BOTH ENDS PIGTAIL, CABLE-11.5	24C1064-11.5 B	1.000	EA	1					
53	05	4350666	CAP CHIP .001 UF C38,C50	1008102JP50X	2.000	EA	4					
54	05	4350575	CAP CHIP 47 PF C45	1008470JP 500X	1.000	EA	4					
55	05	4350419	CAP CHIP 220 PF C44,C46	1008221JP200X	2.000	EA	4					
56	05	4350591	CAP CHIP 10 PF C42	1008100JP500X	1.000	EA	4					
57	05	4630695	POT CER PC PIN 10K OHM .75W20T R44,R53	43P103	2.000	EA	4					
58	05	1641927	W BUSS 22GA	298	.417	FT	4					
59	05	3090230	CONN MALE RT ANGLE PC SNAP ON J3	17-1246-000	1.000	EA	4					
61	05	2300853	CABLE ASSY FMO/SYNTH PCL=605	24B1089 A	1.000	EA	1					
62	05	1050129	SCR BORH SLTD 4/40 X 1/4 SST	BINDER HEAD	2.000	EA	4					
63	06	4410387	RES 12K OHM 1/4W 10% R51	RC07GF123K	1.000	EA	4					
64	06	4410411	RES 22K OHM 1/4W 10% R18	RC07GF223K	1.000	EA	4					
65	06	4410486	RES 82K OHM 1/4W 10% R29	RC07GF823K	1.000	EA	4					
66	06	4410429	RES 27K OHM 1/4W 10% R42	RC07GF273K	1.000	EA	4					
67	06	4410437	RES 33K OHM 1/4W 10% R41	RC07GF333K	1.000	EA	4					
68	06	4410353	RES 6.8K OHM 1/4W 10% R15	RC07GF682K	1.000	EA	4					

PRINT PHANTOM ITEMS
PRINT COMPONENTS
PRINT PHANTOM/COMPONENT COMMENTS

PARENT ITEM	CROSS REF ITEM	DESCRIPTION	BATCH QTY	ITEM TYPE	LOW LEVEL
9301516		COMP ASSY FMO/SYNTH 60-80 MHZ	1	I	04
		ENGR DRAW 2002854 M	EFFEC 9/11/84	UNIT MEAS EA	PLANNER 440

BOM ITEM	LL CO	COMPONENT & CROSS REF.	DESCRIPTION & COMMENT	ENGINEERING DRAWING NUMBER		QUANTITY PER	ITEM UM	ITEM TYP	OPT NBR	FIRST OP SEQ	LT ADJ	EFFECTIVE DATES FROM	TO
69	06	4410452	RES 47K OHM 1/4W 10% R27,R30	RC07GF473K		2.000	EA	4					
70	06	4410247	RES 1K OHM 1/4W 10% R28,R31,R33,R34,R37,R38,R48,R52,R55,R66	RC07GF102K		10.000	EA	4					
71	06	4410379	RES 10K OHM 1/4W 10% R22,R24,R25,R26,R56,R67	RC07GF103K		6.000	EA	4					
72	06	4410270	RES 1.8K OHM 1/4W 10% R20	RC07GF182K		1.000	EA	4					
73	06	4410262	RES 1.5K OHM 1/4W 10% R23	RC07GF152K		1.000	EA	4					
74	05	4410254	RES 1.2K OHM 1/4W 10% R19,R47	RC07GF122K		2.000	EA	4					
75	05	4410080	RES 47 OHM 1/4W 10% R68	RC07GF470K		1.000	EA	4					
76	05	2091064	BOTTOM COVER FMO/SYNTH PCL-606	05C2888	C	1.000	EA	2					
77	06	4410339	RES 4.7K OHM 1/4W 10% R12	RC07GF472K		1.000	EA	4					
78	06	4410238	RES 2.2K OHM 1/4W 10% R14,R43,R45,R57	RC07GF222K		4.000	EA	4					
79	05	4410015	RES 4.7 OHM 1/4W 10% R4,R6,R10,R13	RC07GF4R7K		4.000	EA	4					
80	05	4510004	RES 200 OHM 1/8 W 1% R59,R60	RN55E2000F		2.000	EA	4					
81	05	4420162	RES 150 OHM 1/2W 10% R62	RC20GF151K		1.000	EA	4					
82	06	4410122	RES 100 OHM 1/4W 10% R1,R2,R3,R17,R21,R35,R36,R58	RC07GF101K		8.000	EA	4					
83	06	4410049	RES 22 OHM 1/4W 10% R8,R16,R32,R39	RC07GF220K		4.000	EA	4					
84	06	4410064	RES 33 OHM 1/4W 10% R69	RC07GF330K		1.000	EA	4					
85	05	4460010	RES 10 OHM 1/4W 5% R11	RC07GF100J		1.000	EA	4					
86	05	4540183	RES SIP 4.7K OHM 1/4W 10% R5,R7	750-101-4.7K		2.000	EA	4					
87	05	1130491	WASHER, SST 5710-35-16	5710-35-16		1.000	EA	4					
88	05	1310093	CLIP PCL-606	05C2882	B	20.000	EA	4					
89	05	2090991	FRAME, FMO/SYNTH PCL 606 XMTR	0502870	E	1.000	EA	2					
90	05	2090967	FRAME BASE, MODULE PCL 606	05C2867	C	1.000	EA	2					

PRINT PHANTOM ITEMS
PRINT COMPONENTS
PRINT PHANTOM/COMPONENT COMMENTS

PARENT ITEM	CROSS REF ITEM	DESCRIPTION	BATCH QTY	ITEM TYPE	LOW LEVEL
9301516		COMP ASSY FMO/SYNTH 60-80 MHZ	1	1	04
		ENGR DRAW 2002854 M	EFFEC 9/11/84	UNIT MEAS EA	PLANNER 440

BOM ITEM	LL CD	COMPONENT & CROSS REF.	DESCRIPTION & COMMENT	ENGINEERING DRAWING NUMBER	QUANTITY PER	UM	ITEM TYP	OPT NBR	FIRST OP SEQ	LT ADJ	EFFECTIVE DATES FROM	TO
91	06	4410163	RES 220 OHM 1/4W 10% R9,R70	RC07GF221K	2.000	EA	4					
92	05	4410494	RES 100K OHM 1/4W 10% R40,R45,R54	RC07GF104K	3.000	EA	4					
93	05	2202307	COAX ASSY SMB/S-SMB PC/RT 10 J2,J3,J4	2481091-3 A	1.000	EA	4					
94	05	2110237	HEATSINK TO-5 PUSH-ON U11	#1115B	1.000	EA	4					
95	05	4460747	RES 15 OHM 1/4W 5% R64,R65	RC07GF150J	2.000	EA	4					
96	05	4461018	RES 91 OHM 1/4W 5% R63	RC07GF910J	1.000	EA	4					

UP CONVERTER

Schematic 91D7289
Assembly 20C2848
Assembly 20C2840
Parts List 20C2843
20C2841
20C2842

The Up Converter module, 950 MHz, consists of three separate subassemblies. First is the Up-Converter mixer, 950 MHz, which consists of three-pole, 10% bandwidth, interdigital (Comb-line) 1020 MHz bandpass filter (FL1) and a double balanced mixer (U1). Next is the Up-Converter filter, 950 MHz, which is a five-pole, interdigital, tunable bandpass filter (FL2) designed so that the 1020 MHz LO signal and the 1090 MHz sum of the LO and FMO signals are more than -50 dB below the 950 MHz carrier frequency. The last subassembly is the Up-Converter amplifier, 950 MHz, which is a three-stage broadband RF amplifier with the first two stages operating class A linear and the output stage operating in compression to minimize any changes in gain over a wide temperature range. The Up-Converter amplifier also includes the Up-Converter interface assembly.

The output of the 60-80 MHz frequency modulated oscillator (FMO) (0 to +5 dBm) is fed into the double-balanced mixer along with the filtered 1020 MHz fixed local oscillator signal (+5 to +10 dBm). The resulting 940-960 MHz signal level is typically -10 dBm. The signal is then filtered and amplified to a nominal +20 dBm output, which in turn is fed to the RF Amplifier module. A high degree of repeatability and reliability is achieved by using advanced microstrip design technology in the filters and broadband amplifier.

An output power detector (CR1, R11, C30) is provided for the Up-Converter amplifier. Relative power is detected and relayed to the front panel meter via the Metering and Status board. In the IPA LEVEL position, the front panel meter shows a relative power indication for the Up-Converter amplifier and should read in the shaded area of the lower reference arc.

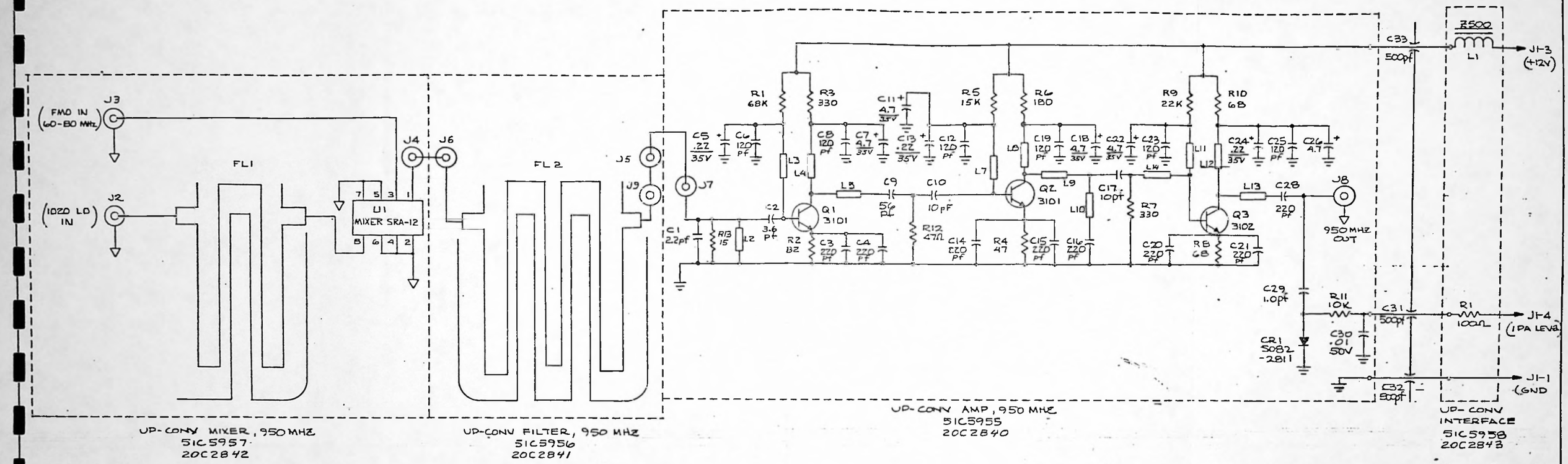

NOTES:

1. UNLESS OTHERWISE SPECIFIED ALL RESISTORS ARE IN OHMS, 1/4W, 10% CAPACITORS ARE IN MICROFARADS
2. TRIM AND DRILL (NOTED)
3. COMPONENT LAYOUT (NOTED)
4. FL1 AND FL2 ALSO L2 THRU L13 ARE FOIL OF THE P.C. BOARD.

USED ON: PCL-606

G	DELETE REV. LEVEL ON BDS.	ECO 42-09 CR 21A0684
F	ART WORK WAS ADDED R13	
E	UP-DATED TO Rev F CHG'D VALUES	
D	CE WAS 110pf ECO 3337, 2-87	
C	RE-RELEASE TO PRODUCTION ECO 3356	
B	R7 WAS 1/4W ECO 3333, 6-86	
A	C12 ARE DISC CAP ECO 3325, 5-86	

MOSELEY ASSOCIATES, INC.
SANTA BARBARA RESEARCH PARK GOLETA, CALIFORNIA 93117

SCHEMATIC
950 MHz UP-CONVERTER

THIRD ANGLE PROJECTION
DATE 10-20-83 DRAWN WONG

91D72B9 G

91D72B9

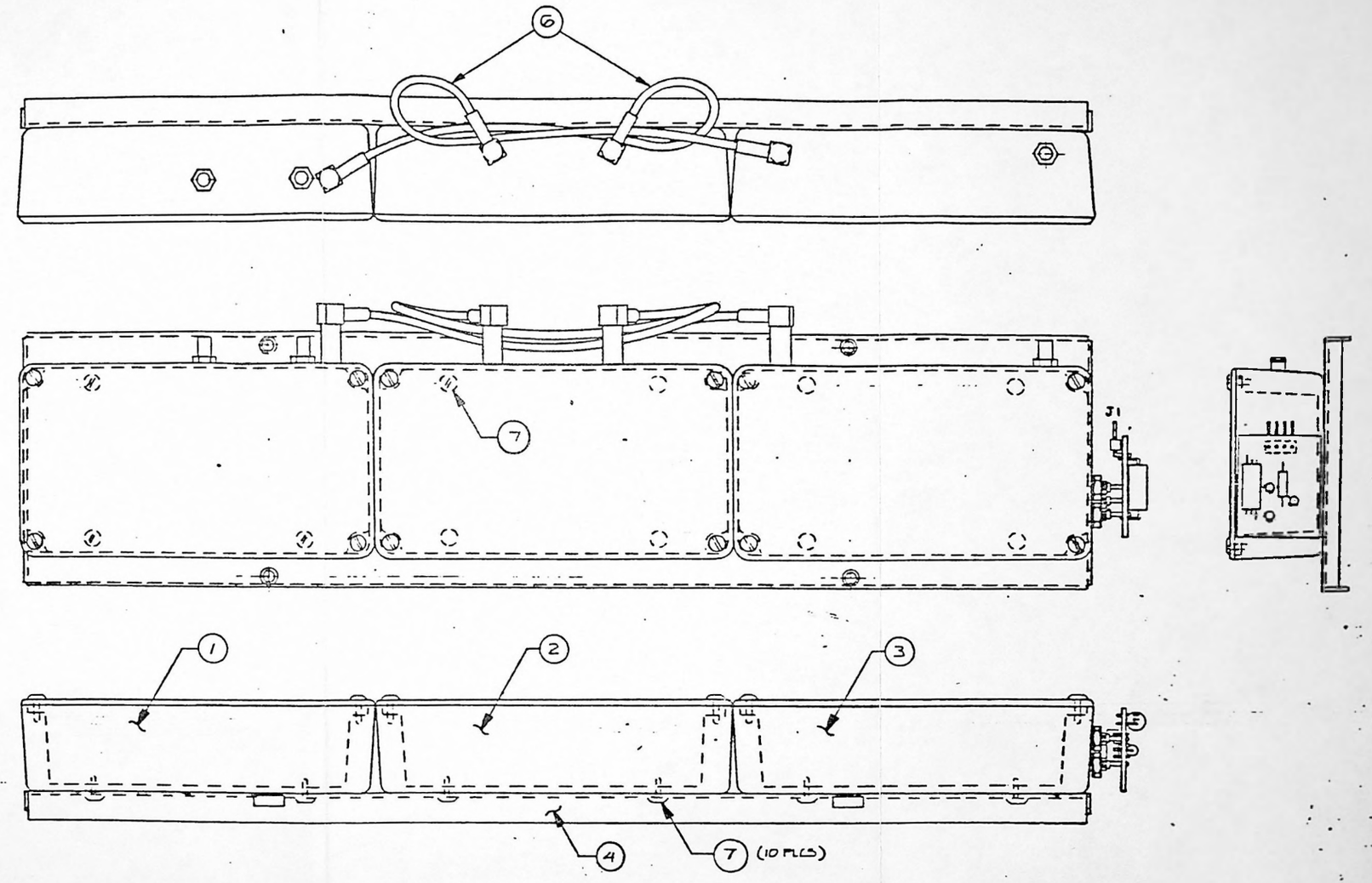

QTY.	DESCRIPTION	STOCK NO.	ITEM
10	SCREW 4-40 x 1/4 B.H.	1050251	7
2	COAX ASSY. SMB/RT SMB/RT 24B1074-1	2201978	6
	-		5
1	MOUNTING PLATE 5C2847	2090918	4
1	UP-CONVER. AMP 20C2840	9301433	3
1	UP-CONVER. FILTER 20C2841	9301441	2
1	UP-CONVER. MIXER 20C2842	9301458	1
*	UP-CONVER. ASSY 20C2848	9103003	*

RE-ROUTE TO PROD. PER SO 480 SOF VIEW. ECO 13368 Jan 1-16

REV. FOR PROD. ECO 5382, 1-11-72 JAK

REVISIONS DATE

MOSELEY ASSOCIATES, INC.

UP-CONVERTER ASSY.

DRWN D.J.B. 1-14-67 SCALE FULL

CHKD 1/19/72

ENG G.A.S. 1-13-72

20C2848 REV *

20C2848

1/76 DIETERICH-POST CLEARPRINT 1020-5

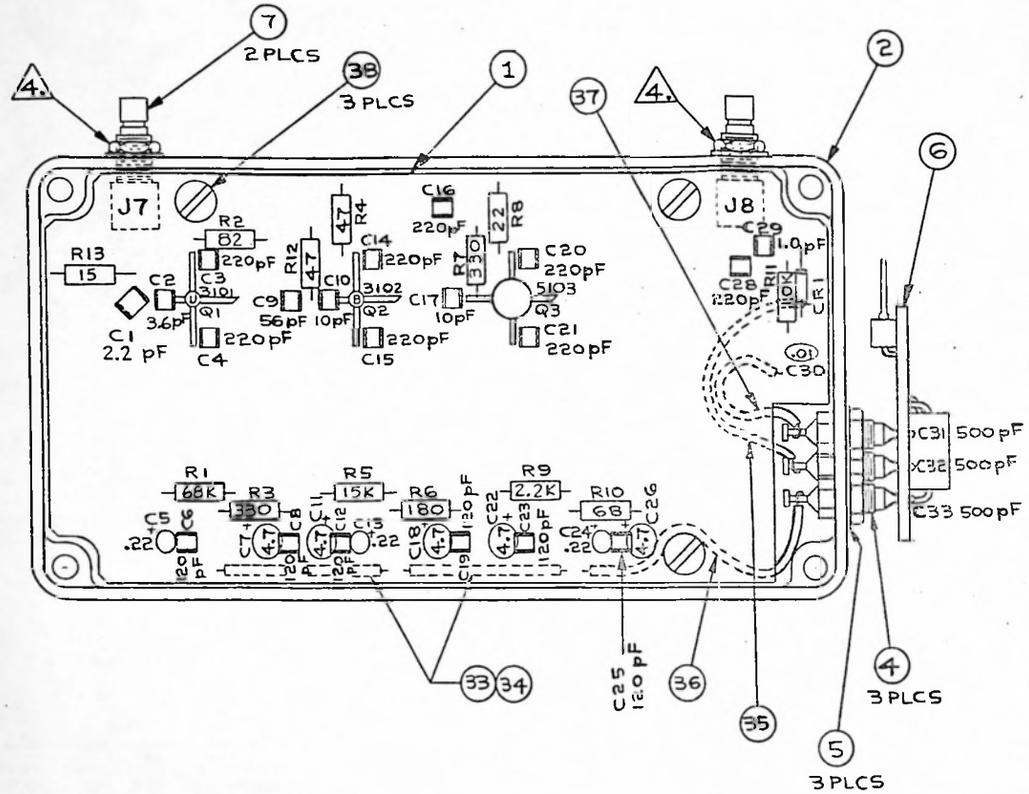

NOTES:

1. UNLESS OTHERWISE SPECIFIED, RESISTOR VALUES ARE IN OHMS, 1/4 W, 10%. CAPACITOR VALUES ARE IN MICROFARADS
2. SCHEMATIC 91D7289
3. PC BD 51C5955
4. MOUNTING NUTS FOR ITEM 7 MUST BE INSTALLED WITH A TORQUE WRENCH SET AT 5 INCH-LBS

USED ON:
PCL-606 XMTR

REVISIONS		
L	OBSOLETE DWG PARTS LIST. ECO 4209 21AUG84	CH
K	NOTE 7 & 8 DELETED ECO 4051L 12-1-83	LE
J	RESISTORS WERE 5%. ECO 2319.	
H	CHANGE ITEMS:-32, 31, 30, 29, 28, 27, 26, 11, 10, 9, 4, ADD ITEMS 11, 25, 24, 23, 22, 12. NOTE 1 WAS 10%. ECO 3565	S.J.
G	R12 WAS. R11. ITEM 8 CORRECTED. ECO 3628	
F	ITEM 1 WAS -11, -21 ECO 3644	
E	ITEM 18 WAS V1020409 ECO 3575, 6-25-82	
D	ADD NOTE 6 TO DWG ECO 3502	
C	C2 WAS 10 pf ECO 3377	
B	REVISED PER ECO 3333 LDN 2-26-82	
A	REL TO PRODUCTION ECO 3314	

MOSELEY ASSOCIATES, INC.
SANTA BARBARA RESEARCH PARK
GOLETA, CALIFORNIA 93117

COMPONENT LAYOUT - UP-CONVERTER AMP 950 MHz

TOL: FRACT. ± 1/32. .XX ± .005. .XXX = .010. ∠ ± 1/2°
DWN. JLW 11-JAN-82 SCALE: 2X
CHK
ENG
20C2840 L

1/76 DIETERICH-POST CLEARPRINT 1020-8

PRINT PHANTOM ITEMS
PRINT COMPONENTS
PRINT PHANTOM/COMPONENT COMMENTS

PARENT ITEM	CROSS REF ITEM	DESCRIPTION	BATCH QTY	ITEM TYPE	LOW LEVEL
9301433		UP CONVERTER AMP 950MHZ 606TX	1	1	04
		ENGR DRAW 20C2840 L	EFFEC 9/17/84	UNIT MEAS EA	PLANNER 440

BOM ITEM	LL CD	COMPONENT & CROSS REF.	DESCRIPTION & COMMENT	ENGINEERING DRAWING NUMBER	QUANTITY PER	UM	ITEM TYP	OPT NBR	FIRST OP SEQ	LT ADJ	EFFECTIVE DATES FROM	TO
1	05	3473238	PCB UP CONVERTER AMP 950MHZ	51C5955 H	1.000	EA	9					
2	05	2090892	ENCL UP-CONV AMP-606 TX	05C2840 B	1.000	EA	2					
4	05	4350088	CAP FD THRU 500PF C31,C32,C33	2425001X500501A	3.000	EA	4					
5	05	1130293	WSHR LK #8 INTL T C31,C32,C33	LOCKWASHER #8	3.000	EA	4					
6	05	9301466	UP CONVERTER INTERFACE 606TX	20C2843 C	1.000	EA	1					
7	05	3090230	CONN MALE RT ANGLE PC SNAP ON J7,J8	17-1246-000	2.000	EA	4					
8	05	4350674	CAP CHIP 3.6 PF +/-0.1PF P80 C2	C17AH3R6B500NTL	1.000	EA	4					
9	05	4350641	CAP CHIP 2.2 PF C1	1008R2CNM500X	1.000	EA	4					
10	05	3640299	XT HXTR-3102 Q2	HXTR-3102	1.000	EA	4					
11	05	3640281	XT HXTR-3101 Q1	HXTR-3101	1.000	EA	4					
12	05	3640372	XT HXTR-5103 Q3	HXTR-5103	1.000	EA	4					
13	05	3610268	DIO 5082-2811 CR1	5082-2811	1.000	EA	4					
14	06	4310272	CAP .01 50V 103M C30	5018EM50R0103K	1.000	EA	4					
15	05	4280012	CAP EPOX-DIP .22/35V 20% C5,C13,C24	1960224X0035HAI	3.000	EA	4					
16	06	4280053	CAP EPOX-DIP 4.7/35V 20% C7,C11,C18,C22,C26	1960475X9035JAI	5.000	EA	4					
17	05	4350393	CAP CHIP 1 PF C29	1008IR0BP500X	1.000	EA	4					
18	05	4350591	CAP CHIP 10 PF C10,C17	1008100JP500X	2.000	EA	4					
19	05	4350625	CAP CHIP 56 PF C9	1008560FP500X	1.000	EA	4					
20	05	4350617	CAP CHIP 120 PF C6,C8,C12,C19,C23,C25	1008121KP300X	6.000	EA	4					
21	05	4350419	CAP CHIP 220 PF C3,C4,C14,C15,C16,C20,C21,C28	1008221JP200X	8.000	EA	4					
22	06	4410478	RES 68K OHM 1/4W 10% R1	RC07GF683K	1.000	EA	4					
23	06	4410189	RES 330 OHM 1/4W 10% R3,R7	RC07GF331K	2.000	EA	4					
24	06	4410049	RES 22 OHM 1/4W 10% R8	RC07GF220K	1.000	EA	4					

PRINT PHANTOM ITEMS
PRINT COMPONENTS
PRINT PHANTOM/COMPONENT COMMENTS

PARENT ITEM	CROSS REF ITEM	DESCRIPTION	BATCH QTY	ITEM TYPE	LOW LEVEL
9301433		UP CONVERTER AMP 950MHZ 606TX ENGR DRAW 20C2840 L	1 EFFEC 9/17/84	1 UNIT MEAS EA	04 PLANNER 440

BCM ITEM	LL CD	COMPONENT & CROSS REF.	DESCRIPTION & COMMENT	ENGINEERING DRAWING NUMBER	QUANTITY PER	UM	ITEM TYP	OPT NBR	FIRST OP SEQ	LT ADJ	EFFECTIVE DATES FROM	TO
25	05	4410114	RES 82 OHM 1/4W 10% R2	RC07GF820K	1.000	EA	4					
26	05	4410080	RES 47 OHM 1/4W 10% R4,R12	RC07GF470K	2.000	EA	4					
27	05	4410106	RES 68 OHM 1/4W 10% R10	RC07GF680K	1.000	EA	4					
28	06	4410155	RES 180 OHM 1/4W 10% R6	RC07GF181K	1.000	EA	4					
29	06	4410288	RES 2.2K OHM 1/4W 10% R9	RC07GF222K	1.000	EA	4					
30	06	4410395	RES 15K OHM 1/4W 10% R5	RC07GF153K	1.000	EA	4					
31	06	4410379	RES 10K OHM 1/4W 10% R11	RC07GF103K	1.000	EA	4					
32	05	4410031	RES 15 OHM 1/4W 10% R13	RC07GF150K	1.000	EA	4					
33	05	1641927	W BUSS 22GA	298	.200	FT	4					
34	05	1560234	TBG TEFLON 22AWG NAT	TFT200-22	.200	FT	4					
35	05	1640770	W STRD 26GA BLACK	BU-734-26#0	.150	FT	4					
36	05	1640796	W STRD 26GA RED	BU-734-26#2	.200	FT	4					
37	05	1640812	W STRD 26GA YELLOW	BU-734-26#4	.100	FT	4					
38	05	1050327	SCR FILHD SLTD 4/40 X 1/4 SST	FILLISTER HEAD	3.000	EA	4					

	QTY.	DESCRIPTION	REF. DES.	STOCK NO.	ITEM NO.
					5
	1	RES. A.B. RC07GF101K 100Ω 1/4W 10%	R1	4410122	4
	1	INDUCTOR, FERROX CUBE VK 200 10/3B (≅ 500)	L1	4020467	3
3.	1	CONN. AMP 87233-4 RIGHT ANGLE 4 PIN	J1	3090347	2
	1	P.C. BOARD, MAI 51B5958 REV.-10, -20		3473261	1
	*	UP-CONVERTER INTERFACE 20C2843		9301466	*

REVISIONS				DATE	MGMT. APPR.
C	ADD NOTE 4 ECO 3541 CAH 21JUN82				
B	RE-RELEASE TO PRODUCTION ECO 3366 A.J.B. 5-13-82				
A	REL TO PRODUCTION ECO 3314 CAH 19 JAN 82				

MOSELEY ASSOCIATES, INC.
SANTA BARBARA RESEARCH PARK
GOLETA, CALIFORNIA 93117

COMPONENT LAYOUT
UP-CONVERTER INTERFACE

TOL: FRACT. ± 1/32, .XX ± .030, .XXX ± .010, ∠ ± 1/2°

DWN	CAH	16 JAN 82	SCALE: 4X
CHK	[illegible]	1-14-82	20C2843
ENG	[illegible]	[illegible]	

QTY	DESCRIPTION	REF DESIG	STOCK NO.	ITEM NO.
4	SCREW #4-40 x 1/4 BNDR HD		1050129	11
4	SCREW, #4-40 x 5/16 BNDR HD		1050145	10
4	WASHER, LOCK, INTL TOOTH		1050624	9
4	STANDOFF, AMATOM 9738-B-0440		1230358	8
1	COAX ASSY, SMB/S-SMB PC/RT MAI 24B1091-1	J5-J9	2202281	7
				6
1	SMB CONNECTOR 17-1246-000	J6	3090230	5
5	TUNING ELEMENT, JOHANSON 6927-0		4350377	4
1	ADJUSTMENT PLATE MAI 5B2850		2062677	3
1	ENCLOSURE, BUD ECONOBOX CU124, MAI 5C2842		2090850	2
1	PC BD, UP-CONV FLTR 950MHz, MAI 5IC5956 REV-10, -20		3473246	1
*	UP-CONVERTER FILTER, 950 MHz, MAI 20C2841		9301441	*

REVISIONS		DATE
D	ITEM 7 WAS MAI 24B1076-2 DELETE ITEM 6 ITEM 5 QTY WAS 2 ECO 3848 CH Jul 11-83	
C	RE-RELEASE TO PROD'N ECO 3356 AJB 2-20-86	
B	ADDED NOTE 7 PER ECO 3333 LDM 1 FEB 82	
A	REL TO PRODUCTION ECO 3314	19 JAN 82

MGMT. APPR.

MOSELEY ASSOCIATES, INC.
SANTA BARBARA RESEARCH PARK
GOLETA, CALIFORNIA 93017

COMPONENT LAYOUT—
UP-CONV FILTER, 950 MHz

TOL: FRACT. ± 1/32, .XX ± .030, .XXX ± .010, ∠ ± 1/2°

DWN		16 JAN 82	SCALE: 2X
CHK		1-18-82	20C2841 D
ENG			

QTY	DESCRIPTION	REF DESIG	STOCK NO.	ITEM
3	SCREW #4-40 X 1/4		1050251	5
1	MIXER, MINI-CIRCUITS SRA-12	U1	3350188	4
3	SMB CONNECTOR 17-1246-000	J2, J3, J4	3090230	3
1	ENCLOSURE, BUD ECONOBOX CU-124, MAI 5C2841		2090876	2
1	PC BD, UP-CONV MIXER, MAI 5IC5957 REV-11, -20		3473253	1
*	UP-CONVERTER MIXER MAI 20C2842		9301458	*

REVISIONS		DATE
D	ITEM 1 WAS -10, -20 ECO 3614, 8-25-82	
C	RE-REL TO PRODCTN ECO 3366 AN 13 2-26-82	
B	ADDED NOTE 3. PER ECO 3333 LDM 1-28-82	
A	REL TO PRODUCTION ECO 3314	19 JAN 82

MGMT. APPR.

MOSELEY ASSOCIATES, INC.
SANTA BARBARA RESEARCH PARK
GOLETA, CALIFORNIA 93117

COMPONENT LAYOUT-
UP-CONV MIXER, 950 MHz

TOL: FRACT. ± 1/32, .XX ± .030, .XXX ± .010, ∠ ± 1/2°

DWN		11 JAN 82	SCALE: 2X
CHK		1-18-82	20C2842 D
ENG		19 JAN 82	

FIRST LOCAL OSCILLATOR AND MULTIPLIER

Schematic 91D7288
Parts List 20D2828

The output LO signal is derived from a crystal-controlled oscillator, which uses an oven-mounted crystal for frequency stability. The signal is buffered and then quadrupled by a pair of active push-push doublers. Filtering in provided between each multiplication to remove unwanted harmonics. The signal is amplified and fed to a step-recovery diode multiplier, and the output is filtered to select the desired harmonic. The signal is then attenuated to control the output impedance and to reduce the power to the level required by the mixer.

On-board power supply regulation eliminates frequency drifts due to line voltage variations.

The output local oscillator signal is derived from crystal-controlled oscillator Q1. This third overtone crystal is temperature stabilized by a 65°C proportionally controlled oven. The output frequency is adjustable by tuning FREQ ADJ L6; this adjustment causes only small output amplitude variations. Oscillator buffer Q2 isolates the oscillator, preventing frequency pulling when adjusting the multipliers.

The output of the buffer is doubled in an active push-push doubler. The singled-ended input from the buffer is split into two out-of-phase voltages in T1 and fed to the bases of two transistors of integrated array U1. The output of these two transistors is summed at their collectors. The close matching of the integrated transistors provides suppression of the fundamental signal driving the bases. The fundamental frequency is further suppressed by an interstage bandpass filter consisting of L15, C18 to C21, L11, C24, L12 and C28.

The second doubler consists of Q3 and Q4. The circuit is essentially the same as the first doubler, but a discrete-component design is used because of the higher frequency and power that are required.

The output of the second doubler is amplified by Q5 to the power level (120 mW) required by the diode multiplier. The output of Q5 is tuned by C39 and impedance matched in two stages to the step-recovery diode multiplier by C38, C41, and L17, and then by C43 and L18. The diode self-bias current is determined by R25.

Diode CR4, the step-recovery diode multiplier, converts the input sinusoidal signal to a stream of impulses. These impulses are fed to an unloaded microstrip quarter-wave resonator (L19), which is tuned to the desired output frequency.

C44 provides a dc block and coupling to the 50 ohm input of output filter FL1. The output of the filter is loaded with a 3 dB attenuator, reducing the output power to that required by the first mixer and providing some control over the impedance seen by the filter. The undesired harmonic multiples of 200 MHz removed from the desired frequency are suppressed at least 40 dB. The output power is between +5 and +12 dBm.

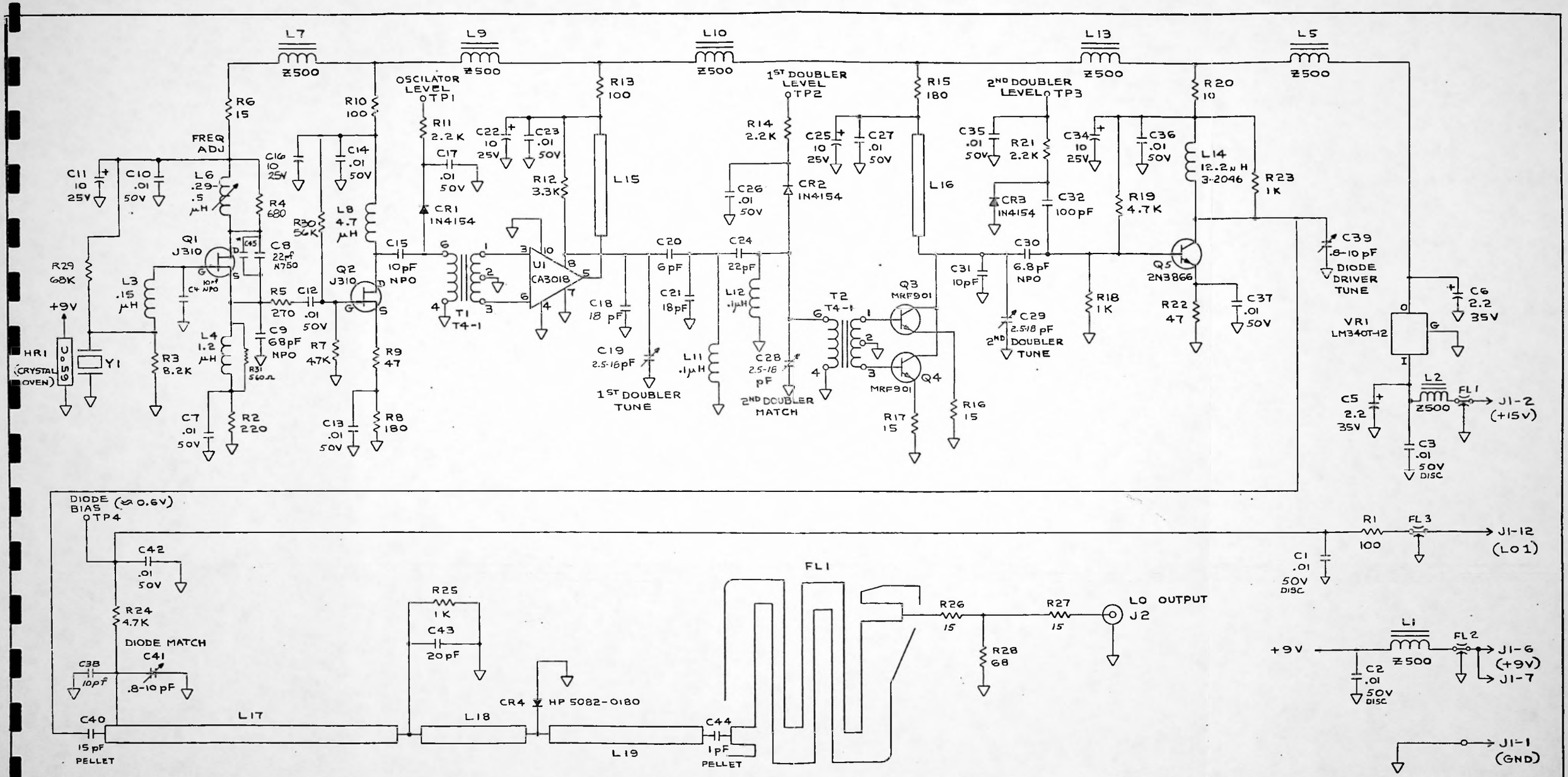

X5 MULTIPLIER

NOTES:

1. UNLESS OTHERWISE SPECIFIED:
   RESISTORS ARE IN OHMS, 1/4W, 10%
   CAPACITORS ARE IN MICROFARADS
2. TRIM AND DRILL 51D5944
3. COMPONENT LAYOUT 20D2828
4. L15 THRU L19 AND FL1 ARE FOIL OF THE P C BOARD

3 DWG. NO.	20D2828-1	20D2828-2	20D2828-3	20D2828-4	20D2828-5	20D2828-6
STOCK NO.	9301276	9301524	9301532	9301581	9301599	9301607
1 ST. LO FREQ.	1020 MHz	1000 MHz	980 MHz	1010-1030 MHz	990-1010 MHz	980-990 MHz
C45	2.2pf NPO	4.7pf NPO	6.8pf NPO	2.2pf NPO	4.7 pF NPO	6.8 pF NPO

USED ON: PCL-606 XMTR & RCVR

MOSELEY ASSOCIATES, INC.
SANTA BARBARA, CALIFORNIA

SCHEMATIC - 940-960 MHz 1ST LO

91D7288 F

91D7288

PRINT PHANTOM ITEMS
PRINT COMPONENTS
PRINT PHANTOM/COMPONENT COMMENTS

PARENT ITEM 9301276 | CROSS REF ITEM | DESCRIPTION LO 1ST PCL-606 940-960 MHZ | ENGR DRAW 2002828-1 P | BATCH QTY 1 | EFFEC 9/21/84 | ITEM TYPE 1 | UNIT MEAS EA | LOW LEVEL 03 | PLANNER 440

BOM ITEM	LL CD	COMPONENT & CROSS REF.	DESCRIPTION & COMMENT	ENGINEERING DRAWING NUMBER		QUANTITY PER	UM	ITEM TYP	OPT NBR	FIRST OP SEQ	LT ADJ	EFFECTIVE DATES FROM	TO
1	04	3473063	PCB 1ST LO PCL-606	5105944	L	1.000	EA	9					
2	04	2091148	MODULE COVER ASSY, CKT 1ST LO	05C2899	A	1.000	EA	1					
3	04	2091015	FRAME, 1ST LO PCL606 RCVR/XMTR	05D2872	D	1.000	EA	2					
4	05	2090967	FRAME BASE, MODULE PCL 606	05C2867	C	1.000	EA	2					
5	04	2091130	MODULE COVER ASSY, COMP 1ST LO	05C2898	A	1.000	EA	1					
6	06	4020467	FERROX CUBE 500 OHM L1,L2,L5,L7,L9,L10,L13	VK200 10/3B		7.000	EA	4					
7	04	4020509	IDCTR MINI-RED .15UH 10% L3	MR.15 10%		1.000	EA	4					
8	04	4020590	IDCTR 1.2 UH 10% L4	9230-22		1.000	EA	4					
9	04	4042057	IDCTR 10.5T BLK TYPE J L6	1171		1.000	EA	4					
10	04	4020608	IDCTR MINI RED 4.7 UH L8	MR 4.7		1.000	EA	4					
11	05	4020640	IDCTR MINI-RED .1 UH 5% L11,L12	MR .10 5%		2.000	EA	4					
12	04	4010872	COIL AIR 2T #18 .30 LH L14	3-2046	B	1.000	EA	1					
13	04	4100038	XFMR MCL T4-1 T1,T2	MCL T4-1		2.000	EA	4					
14	05	3650074	RGLTR LM340T12/7812 VARV1.5A VR1	LM340T-12 /7812		1.000	EA	4					
15	04	3350253	OVEN XTAL PCL 1-16-8-65 HR1	PCL1-16-8-65		1.000	EA	4					
16	04	1230986	STOF 1/4 RND 6-32 X 7/8 ALUM	8160-A-0632		2.000	EA	4					
17	05	3250495	SKT,PIN,.0850DX.200L,GOLD FIN. Y1	450-3286-01-03		2.000	EA	4					
18	04	3291051	FILTER FEED THRU FL1,FL2,FL3	859617-1		3.000	EA	4					
19	05	3090230	CONN MALE RT ANGLE PC SNAP ON J2	17-1246-000		1.000	EA	4					
20	04	2300812	CABLE ASSY 950 1ST LO PCL-606	24B1085	A	1.000	EA	1					
21	06	3290152	TEST JACK WHITE R ANGLE TP1,TP2,TP3,TP4	430-101		4.000	EA	4					
22	04	3730041	IC CA3018 XSTR ARRAY U1	CA-3018		1.000	EA	4					
23	04	3640315	XT FET J310 Q1,Q2	J310		2.000	EA	4					

PRINT PHANTOM ITEMS
PRINT COMPONENTS
PRINT PHANTOM/COMPONENT COMMENTS

PARENT ITEM 9301276 | CROSS REF ITEM | DESCRIPTION LO 1ST PCL-606 940-960 MHZ | ENGR DRAW 2002828-1 P | BATCH QTY 1 | EFFEC 9/21/84 | ITEM TYPE 1 | UNIT MEAS EA | LOW LEVEL 03 | PLANNER 440

BOM ITEM	LL CD	COMPONENT & CROSS REF.	DESCRIPTION & COMMENT	ENGINEERING DRAWING NUMBER	QUANTITY PER	UM	ITEM TYP	OPT NBR	FIRST OP SEQ	LT ADJ	EFFECTIVE DATES FROM	TO
24	04	3640273	XT MRF901 Q3,Q4	MRF 901	2.000	EA	4					
25	04	3630175	XT NP2N3866 05W500M055V.4A Q5	2N3866	1.000	EA	4					
26	05	2110005	HEATSINK TO 5-9 11-12 Q5	NF-204	1.000	EA	4					
27	06	3600145	DIO 1N4154 25V 4NS SI DO35 CR1,CR2,CR3	1N4154	3.000	EA	4					
28	04	3610243	DIO 5082-0180 CR4	HP 5082-0180	1.000	EA	4					
29	06	4310272	CAP .01 50V 103M C7,C10,C12,C13,C14,C17,C23,C26,C27,C35,C36,C37, C42	5018EM50RD103K	13.000	EA	4					
30	06	4280079	CAP EPOX-DIP 10/25V C11,C16,C22,C25,C34	196D106X0025KAI	5.000	EA	4					
31	06	4280046	CAP EPOX-DIP 2.2/35V 20% C5,C6	196D225X0035JAI	2.000	EA	4					
32	04	4300125	CAP N750 DISC 22PF 5% C8	DTN-22	1.000	EA	4					
33	05	4300042	CAP NPO DISC 6.8PF C30	DTZ-6R8	1.000	EA	4					
34	05	1050129	SCR BURH SLTD 4/40 X 1/4 SST	BINDER HEAD	2.000	EA	4					
35	05	1310093	CLIP PCL-606	05C2882 B	16.000	EA	4					
36	06	4410478	RES 68K OHM 1/4W 10% R29	RC07GF683K	1.000	EA	4					
37	04	4300133	CAP NPO DISC 22PF 5% C24	DTZ-22	1.000	EA	4					
38	05	4300067	CAP NPO DISC 10PF 5% C4,C15,C31	DTZ-10	3.000	EA	4					
39	04	4300182	CAP NPO DISC 68PF 5% C9	DTZ-68	1.000	EA	4					
40	05	4350658	CAP CHIP 15 PF C40	1008150JP500X	1.000	EA	4					
41	05	4210084	CAP MICA DIP 18PF C18	DM-15-180J	1.000	EA	4					
42	04	4200069	CAP MICA DIP 100PF C32	DM-5-101J	1.000	EA	4					
43	04	4350492	CAP MICA DIP 6PF C20	DM5-060D	1.000	EA	4					
44	04	4350484	CAP MICA DIP 18PF C21	DM5-180J	1.000	EA	4					
45	04	4370342	CAP VAR 2.5-18PF C19,C28,C29	GXB18000	3.000	EA	4					

PRINT PHANTOM ITEMS
PRINT COMPONENTS
PRINT PHANTOM/COMPONENT COMMENTS

PARENT ITEM 9301276 | CROSS REF ITEM | DESCRIPTION LO 1ST PCL-606 940-960 MHZ ENGR DRAW 2002828-1 P | BATCH QTY 1 EFFEC 9/21/84 | ITEM TYPE 1 UNIT MEAS EA | LOW LEVEL 03 PLANNER 440

BOM ITEM	LL CD	COMPONENT & CROSS REF.	DESCRIPTION & COMMENT	ENGINEERING DRAWING NUMBER	QUANTITY PER	ITEM UM	ITEM TYP	OPT NBR	FIRST OP SEQ	LT ADJ	EFFECTIVE DATES FROM	TO
46	05	4350393	CAP CHIP 1 PF C44	100B1R0BP500X	1.000	EA	4					
47	04	4240024	CAP GL 10PF C38	UY01-100J	1.000	EA	4					
48	04	4240040	CAP GL 20PF C43	UY01-200J	1.000	EA	4					
49	07	4370201	CAP MIN VAR PC .8-10PC C39,C41	MVM010W	2.000	EA	4					
50	05	4310132	CAP DISC .01/50V C1,C2,C3	UK-50-103	3.000	EA	4					
51	06	4410122	RES 100 OHM 1/4W 10% R1,R10,R13	RC07GF101K	3.000	EA	4					
52	06	4410163	RES 220 OHM 1/4W 10% R2	RC07GF221K	1.000	EA	4					
53	05	4410361	RES 8.2K OHM 1/4W 10% R3	RC07GF822K	1.000	EA	4					
54	04	4410460	RES 56K OHM 1/4W 10% R30	RC07GF563K	1.000	EA	4					
55	05	4410171	RES 270 OHM 1/4W 10% R5	RC07GF271K	1.000	EA	4					
56	05	4410031	RES 15 OHM 1/4W 10% R6,R16,R17,R26,R27	RC07GF150K	5.000	EA	4					
57	06	4410155	RES 180 OHM 1/4W 10% R8,R15	RC07GF181K	2.000	EA	4					
58	05	4410080	RES 47 OHM 1/4W 10% R9,R22	RC07GF470K	2.000	EA	4					
59	06	4410288	RES 2.2K OHM 1/4W 10% R11,R14,R21	RC07GF222K	3.000	EA	4					
60	06	4410304	RES 3.3K OHM 1/4W 10% R12	RC07GF332K	1.000	EA	4					
61	06	4410247	RES 1K OHM 1/4W 10% R18,R23,R25	RC07GF102K	3.000	EA	4					
62	06	4410338	RES 4.7K OHM 1/4W 10% R7,R19,R24	RC07GF472K	3.000	EA	4					
63	05	1090182	SCR BDRH SLTD 6/32 X 1/4 SST VR1	BINDER HEAD	5.000	EA	4					
64	06	4410221	RES 680 OHM 1/4W 10% R4	RC07GF681K	1.000	EA	4					
65	05	4410106	RES 68 OHM 1/4W 10% R28	RC07GF680K	1.000	EA	4					
66	06	4410023	RES 10 OHM 1/4W 10% R20	RC07GF100K	1.000	EA	4					
68	05	1090554	NUT HEX 6/32 SM PATT VR1	NUT 6/32 SM	1.000	EA	4					

PRINT PHANTOM ITEMS
PRINT COMPONENTS
PRINT PHANTOM/COMPONENT COMMENTS

PARENT ITEM	CROSS REF ITEM	DESCRIPTION		
9301276		LO 1ST PCL-606 940-960 MHZ ENGR DRAW 2002828-1 P	BATCH QTY 1 EFFEC 9/21/84	ITEM TYPE 1 LOW LEVEL 03 UNIT MEAS EA PLANNER 440

BOM ITEM	LL CD	COMPONENT & CROSS REF.	DESCRIPTION & COMMENT	ENGINEERING DRAWING NUMBER	QUANTITY PER	UM	ITEM TYP	OPT NBR	FIRST OP SEQ	LT ADJ	EFFECTIVE DATES FROM	TO
69	05	1090588	WSHR LK #6 SR SST VR1	LOCKWASHER #6	1.000	EA	4					
70	05	1290188	SIL PAD VR1	7403-09-FR-51	1.000	EA	4					
71	06	4410213	RES 560 OHM 1/4W 10% R31	RC07GF561K	1.000	EA	4					
72	05	1130491	WASHER, SST 5710-35-16	5710-35-16	1.000	EA	4					
73	05	1641927	W BUSS 22GA	298	.300	FT	4					
74	04	3340791	XTAL 51.000 MHZ PCL-606 TX Y1	30A0079-1 D	1.000	EA	4					
75	04	4300018	CAP NPO DISC 2.2PF C45	DTZ-2R2	1.000	EA	4					

PRINT PHANTOM ITEMS
PRINT COMPONENTS
PRINT PHANTOM/COMPONENT COMMENTS

PARENT ITEM 9301524 | CROSS REF ITEM | DESCRIPTION LO 1ST PCL-606 920-940 MHZ ENGR DRAW 20D2828-2 P | BATCH QTY 1 EFFEC 9/21/84 | ITEM TYPE 1 UNIT MEAS EA | LOW LEVEL 03 PLANNER 440

BOM ITEM	LL CD	COMPONENT & CROSS REF.	DESCRIPTION & COMMENT	ENGINEERING DRAWING NUMBER		QUANTITY PER	UM	ITEM TYP	OPT NBR	FIRST OP SEQ	LT ADJ	EFFECTIVE DATES FROM	TO
1	04	3473063	PCB 1ST LO PCL-606	51D5944	L	1.000	EA	9					
2	04	2091148	MODULE COVER ASSY, CKT 1ST LO	05C2899	A	1.000	EA	1					
3	04	2091015	FRAME, 1ST LO PCL606 RCVR/XMTR	05D2872	D	1.000	EA	2					
4	05	2090967	FRAME BASE, MODULE PCL 606	05C2867	C	1.000	EA	2					
5	04	2091130	MODULE COVER ASSY, COMP 1ST LO	05C2898	A	1.000	EA	1					
6	06	4020467	FERROX CUBE 500 OHM L1,L2,L5,L7,L9,L10,L13	VK200 10/3B		7.000	EA	4					
7	04	4020509	IDCTR MINI-RED .15UH 10% L3	MR.15 10%		1.000	EA	4					
8	04	4020590	IDCTR 1.2 UH 10% L4	9230-22		1.000	EA	4					
9	04	4042057	IDCTR 10.5T BLK TYPE J L6	1171		1.000	EA	4					
10	04	4020608	IDCTR MINI RED 4.7 UH L8	MR 4.7		1.000	EA	4					
11	05	4020640	IDCTR MINI-RED .1 UH 5% L11,L12	MR .10 5%		2.000	EA	4					
12	04	4010872	COIL AIR 2T #18 .30 LH L14	3-2046	B	1.000	EA	1					
13	04	4100038	XFMR MCL T4-1 T1,T2	MCL T4-1		2.000	EA	4					
14	05	3650074	RGLTR LM340T12/7812 VARV1.5A VR1	LM340T-12 /7812		1.000	EA	4					
15	04	3350253	OVEN XTAL PCL 1-16-8-65 HR1	PCLI-16-8-65		1.000	EA	4					
16	04	1230986	STDF 1/4 RND 6-32 X 7/8 ALUM	8160-A-0632		2.000	EA	4					
17	05	3250495	SKT,PIN,.08500X.200L,GOLD FIN. Y1	450-3286-01-03		2.000	EA	4					
18	04	3291051	FILTER FEED THRU FL1,FL2,FL3	859617-1		3.000	EA	4					
19	05	3090230	CONN MALE RT ANGLE PC SNAP ON J2	17-1246-000		1.000	EA	4					
20	04	2300812	CABLE ASSY 950 1ST LO PCL-606	2481085	A	1.000	EA	1					
21	06	3290152	TEST JACK WHITE R ANGLE TP1,TP2,TP3,TP4	430-101		4.000	EA	4					
22	04	3730041	IC CA3018 XSTR ARRAY U1	CA-3018		1.000	EA	4					

PRINT PHANTOM ITEMS
PRINT COMPONENTS
PRINT PHANTOM/COMPONENT COMMENTS

PARENT ITEM 9301524 | CROSS REF ITEM | DESCRIPTION LO 1ST PCL-606 920-940 MHZ ENGR DRAW 2002828-2 P | BATCH QTY 1 EFFEC 9/21/84 | ITEM TYPE 1 UNIT MEAS EA | LOW LEVEL 03 PLANNER 440

BOM ITEM	LL CO	COMPONENT & CROSS REF.	DESCRIPTION & COMMENT	ENGINEERING DRAWING NUMBER	QUANTITY PER	ITEM UM	ITEM TYP	OPT NBR	FIRST OP SEQ	LT ADJ	EFFECTIVE DATES FROM	TO
23	04	3640315	XT FET J310 Q1,Q2	J310	2.000	EA	4					
24	04	3640273	XT MRF901 Q3,Q4	MRF 901	2.000	EA	4					
25	04	3630175	XT NP2N3866 05W500M055V.4A Q5	2N3866	1.000	EA	4					
26	05	2110005	HEATSINK TO 5-9 11-12 Q5	NF-204	1.000	EA	4					
27	06	3600145	DIO 1N4154 25V 4NS SI DO35 CR1,CR2,CR3	1N4154	3.000	EA	4					
28	04	3610243	DIO 5082-0180 CR4	HP 5082-0180	1.000	EA	4					
29	06	4310272	CAP .01 50V 103M C7,C10,C12,C13,C14,C17,C23,C26,C27,C35,C36,C37, C42	5018EM50RD103K	13.000	EA	4					
30	06	4280079	CAP EPOX-DIP 10/25V C11,C16,C22,C25,C34	196D106X0025KAI	5.000	EA	4					
31	06	4280046	CAP EPOX-DIP 2.2/35V 20% C5,C6	196D225X0035JAI	2.000	EA	4					
32	04	4300125	CAP N750 DISC 22PF 5% C8	DTN-22	1.000	EA	4					
33	05	4300042	CAP NPO DISC 6.8PF C30	DTZ-6R8	1.000	EA	4					
34	05	1050129	SCR BORH SLTD 4/40 X 1/4 SST	BINDER HEAD	2.000	EA	4					
35	05	1310093	CLIP PCL-606	05C2882 B	16.000	EA	4					
36	06	4410478	RES 68K OHM 1/4W 10% R29	RC07GF683K	1.000	EA	4					
37	04	4300133	CAP NPO DISC 22PF 5% C24	DTZ-22	1.000	EA	4					
38	05	4300067	CAP NPO DISC 10PF 5% C4,C15,C31	DTZ-10	3.000	EA	4					
39	04	4300182	CAP NPO DISC 68PF 5% C9	DTZ-68	1.000	EA	4					
40	05	4350658	CAP CHIP 15 PF C40	100B150JP500X	1.000	EA	4					
41	05	4210084	CAP MICA DIP 18PF C18	DM-15-180J	1.000	EA	4					
42	04	4200069	CAP MICA DIP 100PF C32	DM-5-101J	1.000	EA	4					
43	04	4350492	CAP MICA DIP 6PF C20	DM5-060D	1.000	EA	4					
44	04	4350484	CAP MICA DIP 18PF C21	DM5-180J	1.000	EA	4					

PRINT PHANTOM ITEMS
PRINT COMPONENTS
PRINT PHANTOM/COMPONENT COMMENTS

PARENT ITEM 9301524 | CROSS REF ITEM | DESCRIPTION LO 1ST PCL-606 920-940 MHZ ENGR DRAW 2002828-2 P | BATCH QTY 1 EFFEC 9/21/84 | ITEM TYPE 1 UNIT MEAS EA | LOW LEVEL 03 PLANNER 440

BOM ITEM	LL CO	COMPONENT & CROSS REF.	DESCRIPTION & COMMENT	ENGINEERING DRAWING NUMBER	QUANTITY PER	UM	ITEM TYP	OPT NBR	FIRST OP SEQ	LT ADJ	EFFECTIVE DATES FROM	TO
45	04	4370342	CAP VAR 2.5-18PF C19,C28,C29	GXB18000	3.000	EA	4					
46	05	4350393	CAP CHIP 1 PF C44	100B1R0BP500X	1.000	EA	4					
47	04	4240024	CAP GL 10PF C38	UY01-100J	1.000	EA	4					
48	04	4240040	CAP GL 20PF C43	UY01-200J	1.000	EA	4					
49	07	4370201	CAP MIN VAR PC .8-10PC C39,C41	MVM010W	2.000	EA	4					
50	05	4310132	CAP DISC .01/50V C1,C2,C3	UK-50-103	3.000	EA	4					
51	06	4410122	RES 100 OHM 1/4W 10% R1,R10,R13	RC07GF101K	3.000	EA	4					
52	06	4410163	RES 220 OHM 1/4W 10% R2	RC07GF221K	1.000	EA	4					
53	05	4410361	RES 8.2K OHM 1/4W 10% R3	RC07GF822K	1.000	EA	4					
54	04	4410460	RES 56K OHM 1/4W 10% R30	RC07GF563K	1.000	EA	4					
55	05	4410171	RES 270 OHM 1/4W 10% R5	RC07GF271K	1.000	EA	4					
56	05	4410031	RES 15 OHM 1/4W 10% R6,R16,R17,R26,R27	RC07GF150K	5.000	EA	4					
57	06	4410155	RES 180 OHM 1/4W 10% R8,R15	RC07GF181K	2.000	EA	4					
58	05	4410080	RES 47 OHM 1/4W 10% R9,R22	RC07GF470K	2.000	EA	4					
59	06	4410288	RES 2.2K OHM 1/4W 10% R11,R14,R21	RC07GF222K	3.000	EA	4					
60	06	4410304	RES 3.3K OHM 1/4W 10% R12	RC07GF332K	1.000	EA	4					
61	06	4410247	RES 1K OHM 1/4W 10% R18,R23,R25	RC07GF102K	3.000	EA	4					
62	06	4410338	RES 4.7K OHM 1/4W 10% R7,R19,R24	RC07GF472K	3.000	EA	4					
63	05	1090182	SCR BDRH SLTD 6/32 X 1/4 SST VR1	BINDER HEAD	5.000	EA	4					
64	06	4410221	RES 680 OHM 1/4W 10% R4	RC07GF681K	1.000	EA	4					
65	05	4410106	RES 68 OHM 1/4W 10% R28	RC07GF680K	1.000	EA	4					
66	06	4410023	RES 10 OHM 1/4W 10% R20	RC07GF100K	1.000	EA	4					

PRINT PHANTOM ITEMS
PRINT COMPONENTS
PRINT PHANTOM/COMPONENT COMMENTS

PARENT ITEM CROSS REF ITEM DESCRIPTION LO 1ST PCL-606 920-940 MHZ BATCH QTY 1 ITEM TYPE 1 LOW LEVEL 03
9301524 ENGR DRAW 20D2828-2 P EFFEC 9/21/84 UNIT MEAS EA PLANNER 440

BOM ITEM	LL CU	COMPONENT & CROSS REF.	DESCRIPTION & COMMENT	ENGINEERING DRAWING NUMBER	QUANTITY PER	UM	ITEM TYP	OPT NBR	FIRST OP SEQ	LT ADJ	EFFECTIVE DATES FROM	TO
68	05	1090554	NUT HEX 6/32 SM PATT VR1	NUT 6/32 SM	1.000	EA	4					
69	05	1090588	WSHR LK #6 SR SST VR1	LOCKWASHER #6	1.000	EA	4					
70	05	1290188	SIL PAD VR1	7403-09-FR-51	1.000	EA	4					
71	06	4410213	RES 560 OHM 1/4W 10% R31	RC07GF561K	1.000	EA	4					
72	05	1130491	WASHER, SST 5710-35-16	5710-35-16	1.000	EA	4					
73	05	1641927	W BUSS 22GA	298	.300	FT	4					
74	04	3340825	XTAL 50.000 MHZ PCL-606 Y1	30A0079-2 D	1.000	EA	4					
75	05	4300034	CAP NPO DISC 4.7PF C45	DTZ-4R7	1.000	EA	4					

PRINT PHANTOM ITEMS
PRINT COMPONENTS
PRINT PHANTOM/COMPONENT COMMENTS

PARENT ITEM 9301532 | CROSS REF ITEM | DESCRIPTION LO 1ST PCL-606 910-920 MHZ ENGR DRAW 20D2828-3 P | BATCH QTY 1 EFFEC 9/21/84 | ITEM TYPE 1 UNIT MEAS EA | LOW LEVEL 03 PLANNER 440

BOM ITEM	LL CO	COMPONENT & CROSS REF.	DESCRIPTION & COMMENT	ENGINEERING DRAWING NUMBER		QUANTITY PER	ITEM UM	TYP	OPT NBR	FIRST OP SEQ	LT ADJ	EFFECTIVE DATES FROM	TO
1	04	3473063	PCB 1ST LO PCL-606	5105944	L	1.000	EA	9					
2	04	2091148	MODULE COVER ASSY, CKT 1ST LO	05C2899	A	1.000	EA	1					
3	04	2091015	FRAME, 1ST LO PCL606 RCVR/XMTR	05D2872	D	1.000	EA	2					
4	05	2090967	FRAME BASE, MODULE PCL 606	05C2867	C	1.000	EA	2					
5	04	2091130	MODULE COVER ASSY, COMP 1ST LO	05C2898	A	1.000	EA	1					
6	06	4020467	FERROX CUBE 500 OHM L1,L2,L5,L7,L9,L10,L13	VK200 10/3B		7.000	EA	4					
7	04	4020509	IDCTR MINI-RED .15UH 10% L3	MR.15 10%		1.000	EA	4					
8	04	4020590	IDCTR 1.2 UH 10% L4	9230-22		1.000	EA	4					
9	04	4042057	IDCTR 10.5T BLK TYPE J L6	1171		1.000	EA	4					
10	04	4020608	IDCTR MINI RED 4.7 UH L8	MR 4.7		1.000	EA	4					
11	05	4020640	IDCTR MINI-RED .1 UH 5% L11,L12	MR .10 5%		2.000	EA	4					
12	04	4010872	COIL AIR 2T #18 .30 LH L14	3-2046	B	1.000	EA	1					
13	04	4100038	XFMR MCL T4-1 T1,T2	MCL T4-1		2.000	EA	4					
14	05	3650074	RGLTR LM340T12/7812 VARV1.5A VR1	LM340T-12 /7812		1.000	EA	4					
15	04	3350253	OVEN XTAL PCL 1-16-8-65 HR1	PCL1-16-8-65		1.000	EA	4					
16	04	1230986	STOF 1/4 RND 6-32 X 7/8 ALUM	8160-A-0632		2.000	EA	4					
17	05	3250495	SKT,PIN,.08500X.200L,GOLD FIN. Y1	450-3286-01-03		2.000	EA	4					
18	04	3291051	FILTER FEED THRU FL1,FL2,FL3	859617-1		3.000	EA	4					
19	05	3090230	CONN MALE RT ANGLE PC SNAP ON J2	17-1246-000		1.000	EA	4					
20	04	2300812	CABLE ASSY 950 1ST LO PCL-606	2481085	A	1.000	EA	1					
21	06	3290152	TEST JACK WHITE R ANGLE TP1,TP2,TP3,TP4	430-101		4.000	EA	4					
22	04	3730041	IC CA3018 XSTR ARRAY U1	CA-3018		1.000	EA	4					

PRINT PHANTOM ITEMS
PRINT COMPONENTS
PRINT PHANTOM/COMPONENT COMMENTS

PARENT ITEM	CROSS REF ITEM	DESCRIPTION	BATCH QTY	ITEM TYPE	LOW LEVEL
9301532		LO 1ST PCL-606 910-920 MHZ	1	1	03
		ENGR DRAW 2002828-3 P	EFFEC 9/21/84	UNIT MEAS EA	PLANNER 440

BOM ITEM	LL CD	COMPONENT & CROSS REF.	DESCRIPTION & COMMENT	ENGINEERING DRAWING NUMBER	QUANTITY PER	ITEM UM	TYP	OPT NBR	FIRST OP SEQ	LT ADJ	EFFECTIVE DATES FROM	TO
23	04	3640315	XT FET J310 Q1,Q2	J310	2.000	EA	4					
24	04	3640273	XT MRF901 Q3,Q4	MRF 901	2.000	EA	4					
25	04	3630175	XT NP2N3866 05W500M055V.4A Q5	2N3866	1.000	EA	4					
26	05	2110005	HEATSINK TO 5-9 11-12 Q5	NF-204	1.000	EA	4					
27	06	3600145	DIO 1N4154 25V 4NS SI 0035 CR1,CR2,CR3	1N4154	3.000	EA	4					
28	04	3610243	DIO 5082-0180 CR4	HP 5082-0180	1.000	EA	4					
29	06	4310272	CAP .01 50V 103M C7,C10,C12,C13,C14,C17,C23,C26,C27,C35,C36,C37, C42	5018EM50RD103K	13.000	EA	4					
30	06	4280079	CAP EPOX-DIP 10/25V C11,C16,C22,C25,C34	1960106X0025KAI	5.000	EA	4					
31	06	4280046	CAP EPOX-DIP 2.2/35V 20% C5,C6	1960225X0035JAI	2.000	EA	4					
32	04	4300125	CAP N750 DISC 22PF 5% C8	DTN-22	1.000	EA	4					
33	05	4300042	CAP NPO DISC 6.8PF C30,C45	DTZ-6R8	2.000	EA	4					
34	05	1050129	SCR BDRH SLTD 4/40 X 1/4 SST	BINDER HEAD	2.000	EA	4					
35	05	1310093	CLIP PCL-606	05C2882 B	16.000	EA	4					
36	06	4410478	RES 68K OHM 1/4W 10% R29	RC07GF683K	1.000	EA	4					
37	04	4300133	CAP NPO DISC 22PF 5% C24	DTZ-22	1.000	EA	4					
38	05	4300067	CAP NPO DISC 10PF 5% C4,C15,C31	DTZ-10	3.000	EA	4					
39	04	4300182	CAP NPO DISC 68PF 5% C9	DTZ-68	1.000	EA	4					
40	05	4350658	CAP CHIP 15 PF C40	100B150JP500X	1.000	EA	4					
41	05	4210084	CAP MICA DIP 18PF C18	DM-15-180J	1.000	EA	4					
42	04	4200069	CAP MICA DIP 100PF C32	DM-5-101J	1.000	EA	4					
43	04	4350492	CAP MICA DIP 6PF C20	DM5-060D	1.000	EA	4					
44	04	4350484	CAP MICA DIP 18PF C21	DM5-180J	1.000	EA	4					

PRINT PHANTOM ITEMS
PRINT COMPONENTS
PRINT PHANTOM/COMPONENT COMMENTS

PARENT ITEM	CROSS REF ITEM	DESCRIPTION	BATCH QTY	ITEM TYPE	LOW LEVEL
9301532		LO 1ST PCL-606 910-920 MHZ	1	1	03
		ENGR DRAW 2002828-3 P	EFFEC 9/21/84	UNIT MEAS EA	PLANNER 440

BOM ITEM	LL CD	COMPONENT & CROSS REF.	DESCRIPTION & COMMENT	ENGINEERING DRAWING NUMBER	QUANTITY PER	ITEM UM	ITEM TYP	OPT NBR	FIRST OP SEQ	LT ADJ	EFFECTIVE DATES FROM	TO
45	04	4370342	CAP VAR 2.5-18PF C19,C28,C29	GXB18000	3.000	EA	4					
46	05	4350393	CAP CHIP 1 PF C44	100B1R0BP500X	1.000	EA	4					
47	04	4240024	CAP GL 10PF C38	UY01-100J	1.000	EA	4					
48	04	4240040	CAP GL 20PF C43	UY01-200J	1.000	EA	4					
49	07	4370201	CAP MIN VAR PC .8-10PC C39,C41	MVM010W	2.000	EA	4					
50	05	4310132	CAP DISC .01/50V C1,C2,C3	UK-50-103	3.000	EA	4					
51	06	4410122	RES 100 OHM 1/4W 10% R1,R10,R13	RC07GF101K	3.000	EA	4					
52	06	4410163	RES 220 OHM 1/4W 10% R2	RC07GF221K	1.000	EA	4					
53	05	4410361	RES 8.2K OHM 1/4W 10% R3	RC07GF822K	1.000	EA	4					
54	04	4410460	RES 56K OHM 1/4W 10% R30	RC07GF563K	1.000	EA	4					
55	05	4410171	RES 270 OHM 1/4W 10% R5	RC07GF271K	1.000	EA	4					
56	05	4410031	RES 15 OHM 1/4W 10% R6,R16,R17,R26,R27	RC07GF150K	5.000	EA	4					
57	06	4410155	RES 180 OHM 1/4W 10% R8,R15	RC07GF181K	2.000	EA	4					
58	05	4410080	RES 47 OHM 1/4W 10% R9,R22	RC07GF470K	2.000	EA	4					
59	06	4410288	RES 2.2K OHM 1/4W 10% R11,R14,R21	RC07GF222K	3.000	EA	4					
60	06	4410304	RES 3.3K OHM 1/4W 10% R12	RC07GF332K	1.000	EA	4					
61	06	4410247	RES 1K OHM 1/4W 10% R18,R23,R25	RC07GF102K	3.000	EA	4					
62	06	4410338	RES 4.7K OHM 1/4W 10% R7,R19,R24	RC07GF472K	3.000	EA	4					
63	05	1090182	SCR BDRH SLTD 6/32 X 1/4 SST VR1	BINDER HEAD	5.000	EA	4					
64	06	4410221	RES 680 OHM 1/4W 10% R4	RC07GF681K	1.000	EA	4					
65	05	4410106	RES 68 OHM 1/4W 10% R28	RC07GF680K	1.000	EA	4					
66	06	4410023	RES 10 OHM 1/4W 10% R20	RC07GF100K	1.000	EA	4					

PRINT PHANTOM ITEMS
PRINT COMPONENTS
PRINT PHANTOM/COMPONENT COMMENTS

PARENT ITEM	CROSS REF ITEM	DESCRIPTION		BATCH QTY	ITEM TYPE	LOW LEVEL
9301532		LO 1ST PCL-606 910-920 MHZ		1	1	03
		ENGR DRAW 2002828-3	P	EFFEC 9/21/84	UNIT MEAS EA	PLANNER 440

BOM ITEM	LL CD	COMPONENT & CROSS REF.	DESCRIPTION & COMMENT	ENGINEERING DRAWING NUMBER	QUANTITY PER	UM	ITEM TYP	OPT NBR	FIRST OP SEQ	LT ADJ	EFFECTIVE DATES FROM	TO
68	05	1090554	NUT HEX 6/32 SM PATT VR1	NUT 6/32 SM	1.000	EA	4					
69	05	1090588	WSHR LK #6 SR SST VR1	LOCKWASHER #6	1.000	EA	4					
70	05	1290188	SIL PAD VR1	7403-09-FR-51	1.000	EA	4					
71	06	4410213	RES 560 OHM 1/4W 10% R31	RC07GF561K	1.000	EA	4					
72	05	1130491	WASHER, SST 5710-35-16	5710-35-16	1.000	EA	4					
73	05	1641927	W BUSS 22GA	298	.300	FT	4					
74	04	3340833	XTAL 49.000 MHZ PCL-606 TX Y1	30A0079-3 D	1.000	EA	4					

PRINT PHANTOM ITEMS
PRINT COMPONENTS
PRINT PHANTOM/COMPONENT COMMENTS

PARENT ITEM	CROSS REF ITEM	DESCRIPTION	BATCH QTY	ITEM TYPE	LOW LEVEL
9301581		LO 1ST PCL-606 940-960 MHZ RX	1	1	03
		ENGR DRAW 20D2828-4 P	EFFEC 9/21/84	UNIT MEAS EA	PLANNER 450

BOM ITEM	LL CD	COMPONENT & CROSS REF.	DESCRIPTION & COMMENT	ENGINEERING DRAWING NUMBER		QUANTITY PER	UM	ITEM TYP	OPT NBR	FIRST OP SEQ	LT ADJ	EFFECTIVE DATES FROM	TO
1	04	3473063	PCB 1ST LO PCL-606	51D5944	L	1.000	EA	9					
2	04	2091148	MODULE COVER ASSY, CKT 1ST LO	05C2899	A	1.000	EA	1					
3	04	2091015	FRAME, 1ST LO PCL606 RCVR/XMTR	05D2872	D	1.000	EA	2					
4	05	2090967	FRAME BASE, MODULE PCL 606	05C2867	C	1.000	EA	2					
5	04	2091130	MODULE COVER ASSY, COMP 1ST LO	05C2898	A	1.000	EA	1					
6	06	4020467	FERROX CUBE 500 OHM L1,L2,L5,L7,L9,L10,L13	VK200 10/3B		7.000	EA	4					
7	04	4020509	IDCTR MINI-RED .15UH 10% L3	MR.15 10%		1.000	EA	4					
8	04	4020590	IDCTR 1.2 UH 10% L4	9230-22		1.000	EA	4					
9	04	4042057	IDCTR 10.5T BLK TYPE J L6	1171		1.000	EA	4					
10	04	4020608	IDCTR MINI RED 4.7 UH L8	MR 4.7		1.000	EA	4					
11	05	4020640	IDCTR MINI-RED .1 UH 5% L11,L12	MR .10 5%		2.000	EA	4					
12	04	4010872	COIL AIR 2T #18 .30 LH L14	3-2046	B	1.000	EA	1					
13	04	4100038	XFMR MCL T4-1 T1,T2	MCL T4-1		2.000	EA	4					
14	05	3650074	RGLTR LM340T12/7812 VARV1.5A VR1	LM340T-12 /7812		1.000	EA	4					
15	04	3350253	OVEN XTAL PCL 1-16-8-65 HR1	PCL1-16-8-65		1.000	EA	4					
16	04	1230986	STDF 1/4 RND 6-32 X 7/8 ALUM	8160-A-0632		2.000	EA	4					
17	05	3250495	SKT,PIN,.08500X.200L,GOLD FIN. Y1	450-3286-01-03		2.000	EA	4					
18	04	3291051	FILTER FEED THRU FL1,FL2,FL3	859617-1		3.000	EA	4					
19	05	3090230	CONN MALE RT ANGLE PC SNAP ON J2	17-1246-000		1.000	EA	4					
20	04	2300812	CABLE ASSY 950 1ST LO PCL-606	2481085	A	1.000	EA	1					
21	06	3290152	TEST JACK WHITE R ANGLE TP1,TP2,TP3,TP4	430-101		4.000	EA	4					
22	04	3730041	IC CA3018 XSTR ARRAY U1	CA-3018		1.000	EA	4					

PRINT PHANTOM ITEMS
PRINT COMPONENTS
PRINT PHANTOM/COMPONENT COMMENTS

PARENT ITEM	CROSS REF ITEM	DESCRIPTION			
9301581		LO 1ST PCL-606 940-960 MHZ RX ENGR DRAW 2002828-4 P	BATCH QTY 1 EFFEC 9/21/84	ITEM TYPE 1 UNIT MEAS EA	LOW LEVEL 03 PLANNER 450

BOM ITEM	LL CD	COMPONENT & CROSS REF.	DESCRIPTION & COMMENT	ENGINEERING DRAWING NUMBER	QUANTITY PER	ITEM UM	ITEM TYP	OPT NBR	FIRST OP SEQ	LT ADJ	EFFECTIVE DATES FROM	TO
23	04	3640315	XT FET J310 Q1,Q2	J310	2.000	EA	4					
24	04	3640273	XT MRF901 Q3,Q4	MRF 901	2.000	EA	4					
25	04	3630175	XT NP2N3866 05W500M055V.4A Q5	2N3866	1.000	EA	4					
26	05	2110005	HEATSINK TO 5-9 11-12 Q5	NF-204	1.000	EA	4					
27	06	3600145	DIO 1N4154 25V 4NS SI DO35 CR1,CR2,CR3	1N4154	3.000	EA	4					
28	04	3610243	DIO 5082-0180 CR4	HP 5082-0180	1.000	EA	4					
29	06	4310272	CAP .01 50V 103M C7,C10,C12,C13,C14,C17,C23,C26,C27,C35,C36,C37, C42	5018EM50RD103K	13.000	EA	4					
30	06	4280079	CAP EPOX-DIP 10/25V C11,C16,C22,C25,C34	196D106X0025KAI	5.000	EA	4					
31	06	4280046	CAP EPOX-DIP 2.2/35V 20% C5,C6	196D225X0035JAI	2.000	EA	4					
32	04	4300125	CAP N750 DISC 22PF 5% C8	DTN-22	1.000	EA	4					
33	05	4300042	CAP NPO DISC 6.8PF C30	DTZ-6R8	1.000	EA	4					
34	05	1050129	SCR BORH SLID 4/40 X 1/4 SST	BINDER HEAD	2.000	EA	4					
35	05	1310093	CLIP PCL-606	05C2882 B	16.000	EA	4					
36	06	4410478	RES 68K OHM 1/4W 10% R29	RC07GF683K	1.000	EA	4					
37	04	4300133	CAP NPO DISC 22PF 5% C24	DTZ-22	1.000	EA	4					
38	05	4300067	CAP NPO DISC 10PF 5% C4,C15,C31	DTZ-10	3.000	EA	4					
39	04	4300182	CAP NPO DISC 68PF 5% C9	DTZ-68	1.000	EA	4					
40	05	4350658	CAP CHIP 15 PF C40	100B150JP500X	1.000	EA	4					
41	05	4210084	CAP MICA DIP 18PF C18	DM-15-180J	1.000	EA	4					
42	04	4200069	CAP MICA DIP 100PF C32	DM-5-101J	1.000	EA	4					
43	04	4350492	CAP MICA DIP 6PF C20	DM5-060D	1.000	EA	4					
44	04	4350484	CAP MICA DIP 18PF C21	DM5-180J	1.000	EA	4					

PRINT PHANTOM ITEMS
PRINT COMPONENTS
PRINT PHANTOM/COMPONENT COMMENTS

PARENT ITEM 9301581 | CROSS REF ITEM | DESCRIPTION LO 1ST PCL-606 940-960 MHZ RX ENGR DRAW 20D2828-4 P | BATCH QTY 1 EFFEC 9/21/84 | ITEM TYPE 1 UNIT MEAS EA | LOW LEVEL 03 PLANNER 450

BOM ITEM	LL CD	COMPONENT & CROSS REF.	DESCRIPTION & COMMENT	ENGINEERING DRAWING NUMBER	QUANTITY PER	ITEM UM	ITEM TYP	OPT NBR	FIRST OP SEQ	LT ADJ	EFFECTIVE DATES FROM	TO
45	04	4370342	CAP VAR 2.5-18PF C19,C28,C29	GXB18000	3.000	EA	4					
46	05	4350393	CAP CHIP 1 PF C44	100B1R0BP500X	1.000	EA	4					
47	04	4240024	CAP GL 10PF C38	UY01-100J	1.000	EA	4					
48	04	4240040	CAP GL 20PF C43	UY01-200J	1.000	EA	4					
49	07	4370201	CAP MIN VAR PC .8-10PC C39,C41	MVM010W	2.000	EA	4					
50	05	4310132	CAP DISC .01/50V C1,C2,C3	UK-50-103	3.000	EA	4					
51	06	4410122	RES 100 OHM 1/4W 10% R1,R10,R13	RC07GF101K	3.000	EA	4					
52	06	4410163	RES 220 OHM 1/4W 10% R2	RC07GF221K	1.000	EA	4					
53	05	4410361	RES 8.2K OHM 1/4W 10% R3	RC07GF822K	1.000	EA	4					
54	04	4410460	RES 56K OHM 1/4W 10% R30	RC07GF563K	1.000	EA	4					
55	05	4410171	RES 270 OHM 1/4W 10% R5	RC07GF271K	1.000	EA	4					
56	05	4410031	RES 15 OHM 1/4W 10% R6,R16,R17,R26,R27	RC07GF150K	5.000	EA	4					
57	06	4410155	RES 180 OHM 1/4W 10% R8,R15	RC07GF181K	2.000	EA	4					
58	05	4410080	RES 47 OHM 1/4W 10% R9,R22	RC07GF470K	2.000	EA	4					
59	06	4410288	RES 2.2K OHM 1/4W 10% R11,R14,R21	RC07GF222K	3.000	EA	4					
60	06	4410304	RES 3.3K OHM 1/4W 10% R12	RC07GF332K	1.000	EA	4					
61	06	4410247	RES 1K OHM 1/4W 10% R18,R23,R25	RC07GF102K	3.000	EA	4					
62	06	4410338	RES 4.7K OHM 1/4W 10% R7,R19,R24	RC07GF472K	3.000	EA	4					
63	05	1090182	SCR BORH SLTD 6/32 X 1/4 SST VR1	BINDER HEAD	5.000	EA	4					
64	06	4410221	RES 680 OHM 1/4W 10% R4	RC07GF681K	1.000	EA	4					
65	05	4410106	RES 68 OHM 1/4W 10% R28	RC07GF680K	1.000	EA	4					
66	06	4410023	RES 10 OHM 1/4W 10% R20	RC07GF100K	1.000	EA	4					

PRINT PHANTOM ITEMS
PRINT COMPONENTS
PRINT PHANTOM/COMPONENT COMMENTS

PARENT ITEM	CROSS REF ITEM	DESCRIPTION	BATCH QTY	ITEM TYPE	LOW LEVEL
9301581		LO IST PCL-606 940-960 MHZ RX	1	1	03
		ENGR DRAW 2002828-4 P	EFFEC 9/21/84	UNIT MEAS EA	PLANNER 450

BOM ITEM	LL CD	COMPONENT & CROSS REF.	DESCRIPTION & COMMENT	ENGINEERING DRAWING NUMBER	QUANTITY PER	UM	ITEM TYP	OPT NBR	FIRST OP SEQ	LT ADJ	EFFECTIVE DATES FROM	TO
68	05	1090554	NUT HEX 6/32 SM PATT VR1	NUT 6/32 SM	1.000	EA	4					
69	05	1090588	WSHR LK #6 SR SST VR1	LOCKWASHER #6	1.000	EA	4					
70	05	1290188	SIL PAD VR1	7403-09-FR-51	1.000	EA	4					
71	06	4410213	RES 560 OHM 1/4W 10% R31	RC07GF561K	1.000	EA	4					
72	05	1130491	WASHER, SST 5710-35-16	5710-35-16	1.000	EA	4					
73	05	1641927	W BUSS 22GA	298	.300	FT	4					
74	04	3340809	XTAL PCL-606 RX Y1	30A0082 C	1.000	EA	4					
75	04	4300018	CAP NPO DISC 2.2PF C45	DTZ-2R2	1.000	EA	4					

PRINT PHANTOM ITEMS
PRINT COMPONENTS
PRINT PHANTOM/COMPONENT COMMENTS

PARENT ITEM 9301599 | CROSS REF ITEM | DESCRIPTION LO 1ST PCL-606 920-940 MHZ RX ENGR DRAW 2002828-5 P | BATCH QTY 1 EFFEC 9/21/84 | ITEM TYPE 1 UNIT MEAS EA | LOW LEVEL 03 PLANNER 440

BOM ITEM	LL CO	COMPONENT & CROSS REF.	DESCRIPTION & COMMENT	ENGINEERING DRAWING NUMBER		QUANTITY PER	UM	ITEM TYP	OPT NBR	FIRST OP SEQ	LT ADJ	EFFECTIVE DATES FROM	TO
1	04	3473063	PCB 1ST LO PCL-606	5105944	L	1.000	EA	9					
2	04	2091148	MODULE COVER ASSY, CKT 1ST LO	05C2899	A	1.000	EA	1					
3	04	2091015	FRAME, 1ST LO PCL606 RCVR/XMTR	05D2872	D	1.000	EA	2					
4	05	2090967	FRAME BASE, MODULE PCL 606	05C2867	C	1.000	EA	2					
5	04	2091130	MODULE COVER ASSY, COMP 1ST LO	05C2898	A	1.000	EA	1					
6	06	4020467	FERROX CUBE 500 OHM L1,L2,L5,L7,L9,L10,L13	VK200 10/3B		7.000	EA	4					
7	04	4020509	IDCTR MINI-RED .15UH 10% L3	MR.15 10%		1.000	EA	4					
8	04	4020590	IDCTR 1.2 UH 10% L4	9230-22		1.000	EA	4					
9	04	4042057	IDCTR 10.5T BLK TYPE J L6	1171		1.000	EA	4					
10	04	4020608	IDCTR MINI RED 4.7 UH L8	MR 4.7		1.000	EA	4					
11	05	4020640	IDCTR MINI-RED .1 UH 5% L11,L12	MR .10 5%		2.000	EA	4					
12	04	4010872	COIL AIR 2T #18 .30 LH L14	3-2046	B	1.000	EA	1					
13	04	4100038	XFMR MCL T4-1 T1,T2	MCL T4-1		2.000	EA	4					
14	05	3650074	RGLTR LM340T12/7812 VARV1.5A VR1	LM340T-12 /7812		1.000	EA	4					
15	04	3350253	OVEN XTAL PCL 1-16-8-65 HR1	PCL1-16-8-65		1.000	EA	4					
16	04	1230986	STDF 1/4 RND 6-32 X 7/8 ALUM	8160-A-0632		2.000	EA	4					
17	05	3250495	SKT,PIN,.08500X.200L,GOLD FIN. Y1	450-3286-01-03		2.000	EA	4					
18	04	3291051	FILTER FEED THRU FL1,FL2,FL3	859617-1		3.000	EA	4					
19	05	3090230	CONN MALE RT ANGLE PC SNAP ON J2	17-1246-000		1.000	EA	4					
20	04	2300812	CABLE ASSY 950 1ST LO PCL-606	2481085	A	1.000	EA	1					
21	06	3290152	TEST JACK WHITE R ANGLE TP1,TP2,TP3,TP4	430-101		4.000	EA	4					
22	04	3730041	IC CA3018 XSTR ARRAY U1	CA-3018		1.000	EA	4					

PRINT PHANTOM ITEMS
PRINT COMPONENTS
PRINT PHANTOM/COMPONENT COMMENTS

PARENT ITEM	CROSS REF ITEM	DESCRIPTION	BATCH QTY	ITEM TYPE	LOW LEVEL
9301599		LO IST PCL-606 920-940 MHZ RX	1	1	03
		ENGR DRAW 20D2828-5 P	EFFEC 9/21/84	UNIT MEAS EA	PLANNER 440

BOM ITEM	LL CD	COMPONENT & CROSS REF.	DESCRIPTION & COMMENT	ENGINEERING DRAWING NUMBER	QUANTITY PER	ITEM UM	ITEM TYP	OPT NBR	FIRST OP SEQ	LT ADJ	EFFECTIVE DATES FROM	TO
23	04	3640315	XT FET J310 Q1,Q2	J310	2.000	EA	4					
24	04	3640273	XT MRF901 Q3,Q4	MRF 901	2.000	EA	4					
25	04	3630175	XT NP2N3866 05W500M055V.4A Q5	2N3866	1.000	EA	4					
26	05	2110005	HEATSINK TO 5-9 11-12 Q5	NF-204	1.000	EA	4					
27	06	3600145	DIO 1N4154 25V 4NS SI D035 CR1,CR2,CR3	1N4154	3.000	EA	4					
28	04	3610243	DIO 5082-0180 CR4	HP 5082-0180	1.000	EA	4					
29	06	4310272	CAP .01 50V 103M C7,C10,C12,C13,C14,C17,C23,C26,C27,C35,C36,C37, C42	5018EM50RD103K	13.000	EA	4					
30	06	4280079	CAP EPOX-DIP 10/25V C11,C16,C22,C25,C34	196D106X0025KAI	5.000	EA	4					
31	06	4280046	CAP EPOX-DIP 2.2/35V 20% C5,C6	1960225X0035JAI	2.000	EA	4					
32	04	4300125	CAP N750 DISC 22PF 5% C8	DTN-22	1.000	EA	4					
33	05	4300042	CAP NPO DISC 6.8PF C30	DTZ-6R8	1.000	EA	4					
34	05	1050129	SCR BDRH SLTD 4/40 X 1/4 SST	BINDER HEAD	2.000	EA	4					
35	05	1310093	CLIP PCL-606	05C2882 B	16.000	EA	4					
36	06	4410478	RES 68K OHM 1/4W 10% R29	RC07GF683K	1.000	EA	4					
37	04	4300133	CAP NPO DISC 22PF 5% C24	DTZ-22	1.000	EA	4					
38	05	4300067	CAP NPO DISC 10PF 5% C4,C15,C31	DTZ-10	3.000	EA	4					
39	04	4300182	CAP NPO DISC 68PF 5% C9	DTZ-68	1.000	EA	4					
40	05	4350658	CAP CHIP 15 PF C40	100B150JP500X	1.000	EA	4					
41	05	4210084	CAP MICA DIP 18PF C18	DM-15-180J	1.000	EA	4					
42	04	4200069	CAP MICA DIP 100PF C32	DM-5-101J	1.000	EA	4					
43	04	4350492	CAP MICA DIP 6PF C20	DM5-060D	1.000	EA	4					
44	04	4350484	CAP MICA DIP 18PF C21	DM5-180J	1.000	EA	4					

PRINT PHANTOM ITEMS
PRINT COMPONENTS
PRINT PHANTOM/COMPONENT COMMENTS

PARENT ITEM	CROSS REF ITEM	DESCRIPTION	BATCH QTY	ITEM TYPE	LOW LEVEL
9301599		LO 1ST PCL-606 920-940 MHZ RX	1	1	03
		ENGR DRAW 2002828-5 P	EFFEC 9/21/84	UNIT MEAS EA	PLANNER 440

BOM ITEM	LL CD	COMPONENT & CROSS REF.	DESCRIPTION & COMMENT	ENGINEERING DRAWING NUMBER	QUANTITY PER	UM	ITEM TYP	OPT NBR	FIRST OP SEQ	LT ADJ	EFFECTIVE DATES FROM	TO
45	04	4370342	CAP VAR 2.5-18PF C19,C28,C29	GXB18000	3.000	EA	4					
46	05	4350393	CAP CHIP 1 PF C44	100B1R0BP500X	1.000	EA	4					
47	04	4240024	CAP GL 10PF C38	UY01-100J	1.000	EA	4					
48	04	4240040	CAP GL 20PF C43	UY01-200J	1.000	EA	4					
49	07	4370201	CAP MIN VAR PC .8-10PC C39,C41	MVM010W	2.000	EA	4					
50	05	4310132	CAP DISC .01/50V C1,C2,C3	UK-50-103	3.000	EA	4					
51	06	4410122	RES 100 OHM 1/4W 10% R1,R10,R13	RC07GF101K	3.000	EA	4					
52	06	4410163	RES 220 OHM 1/4W 10% R2	RC07GF221K	1.000	EA	4					
53	05	4410361	RES 8.2K OHM 1/4W 10% R3	RC07GF822K	1.000	EA	4					
54	04	4410460	RES 56K OHM 1/4W 10% R30	RC07GF563K	1.000	EA	4					
55	05	4410171	RES 270 OHM 1/4W 10% R5	RC07GF271K	1.000	EA	4					
56	05	4410031	RES 15 OHM 1/4W 10% R6,R16,R17,R26,R27	RC07GF150K	5.000	EA	4					
57	06	4410155	RES 180 OHM 1/4W 10% R8,R15	RC07GF181K	2.000	EA	4					
58	05	4410080	RES 47 OHM 1/4W 10% R9,R22	RC07GF470K	2.000	EA	4					
59	06	4410288	RES 2.2K OHM 1/4W 10% R11,R14,R21	RC07GF222K	3.000	EA	4					
60	06	4410304	RES 3.3K OHM 1/4W 10% R12	RC07GF332K	1.000	EA	4					
61	06	4410247	RES 1K OHM 1/4W 10% R18,R23,R25	RC07GF102K	3.000	EA	4					
62	06	4410338	RES 4.7K OHM 1/4W 10% R7,R19,R24	RC07GF472K	3.000	EA	4					
63	05	1090182	SCR BDRH SLTD 6/32 X 1/4 SST VR1	BINDER HEAD	5.000	EA	4					
64	06	4410221	RES 680 OHM 1/4W 10% R4	RC07GF681K	1.000	EA	4					
65	05	4410106	RES 68 OHM 1/4W 10% R28	RC07GF680K	1.000	EA	4					
66	06	4410023	RES 10 OHM 1/4W 10% R20	RC07GF100K	1.000	EA	4					

PRINT PHANTOM ITEMS
PRINT COMPONENTS
PRINT PHANTOM/COMPONENT COMMENTS

PARENT ITEM	CROSS REF ITEM	DESCRIPTION	BATCH QTY	ITEM TYPE	LOW LEVEL
9301599		LO 1ST PCL-606 920-940 MHZ RX	1	1	03
		ENGR DRAW 2002828-5 P	EFFEC 9/21/84	UNIT MEAS EA	PLANNER 440

BOM ITEM	LL CO	COMPONENT & CROSS REF.	DESCRIPTION & COMMENT	ENGINEERING DRAWING NUMBER	QUANTITY PER	ITEM UM	ITEM TYP	OPT NBR	FIRST OP SEQ	LT ADJ	EFFECTIVE DATES FROM	TO
68	05	1090554	NUT HEX 6/32 SM PATT VR1	NUT 6/32 SM	1.000	EA	4					
69	05	1090588	WSHR LK #6 SR SST VR1	LOCKWASHER #6	1.000	EA	4					
70	05	1290188	SIL PAD VR1	7403-09-FR-51	1.000	EA	4					
71	06	4410213	RES 560 OHM 1/4W 10% R31	RC07GF561K	1.000	EA	4					
72	05	1130491	WASHER, SST 5710-35-16	5710-35-16	1.000	EA	4					
73	05	1641927	W BUSS 22GA	298	.300	FT	4					
74	04	3340809	XTAL PCL-606 RX Y1	30A0082 C	1.000	EA	4					
75	05	4300034	CAP NPO DISC 4.7PF C45	DTZ-4R7	1.000	EA	4					

PRINT PHANTOM ITEMS
PRINT COMPONENTS
PRINT PHANTOM/COMPONENT COMMENTS

PARENT ITEM	CROSS REF ITEM	DESCRIPTION	BATCH QTY	ITEM TYPE	LOW LEVEL
9301607		LO 1ST PCL-606 910-920 MHZ RX ENGR DRAW 20D2828-6 P	1 EFFEC 9/21/84	1 UNIT MEAS EA	03 PLANNER 440

BOM ITEM	LL CO	COMPONENT & CROSS REF.	DESCRIPTION & COMMENT	ENGINEERING DRAWING NUMBER		QUANTITY PER	ITEM UM	TYP	OPT NBR	FIRST OP SEQ	LT ADJ	EFFECTIVE DATES FROM	TO
1	04	3473063	PCB 1ST LO PCL-606	51D5944	L	1.000	EA	9					
2	04	2091148	MODULE COVER ASSY, CKT 1ST LO	05C2899	A	1.000	EA	1					
3	04	2091015	FRAME, 1ST LO PCL606 RCVR/XMTR	05D2872	D	1.000	EA	2					
4	05	2090967	FRAME BASE, MODULE PCL 606	05C2867	C	1.000	EA	2					
5	04	2091130	MODULE COVER ASSY, COMP 1ST LO	05C2898	A	1.000	EA	1					
6	06	4020467	FERROX CUBE 500 OHM L1,L2,L5,L7,L9,L10,L13	VK200 10/38		7.000	EA	4					
7	04	4020509	IDCTR MINI-RED .15UH 10% L3	MR.15 10%		1.000	EA	4					
8	04	4020590	IDCTR 1.2 UH 10% L4	9230-22		1.000	EA	4					
9	04	4042057	IDCTR 10.5T BLK TYPE J L6	1171		1.000	EA	4					
10	04	4020608	IDCTR MINI RED 4.7 UH L8	MR 4.7		1.000	EA	4					
11	05	4020640	IDCTR MINI-RED .1 UH 5% L11,L12	MR .10 5%		2.000	EA	4					
12	04	4010872	COIL AIR 2T #19 .30 LH L14	3-2046	B	1.000	EA	1					
13	04	4100038	XFMR MCL T4-1 T1,T2	MCL T4-1		2.000	EA	4					
14	05	3650074	RGLTR LM340T12/7812 VARV1.5A VR1	LM340T-12 /7812		1.000	EA	4					
15	04	3350253	OVEN XTAL PCL 1-16-8-65 HR1	PCL1-16-8-65		1.000	EA	4					
16	04	1230986	STOF 1/4 RND 6-32 X 7/8 ALUM	8160-A-0632		2.000	EA	4					
17	05	3250495	SKT,PIN,.08500X.200L,GOLD FIN. Y1	450-3286-01-03		2.000	EA	4					
18	04	3291051	FILTER FEED THRU FL1,FL2,FL3	859617-1		3.000	EA	4					
19	05	3090230	CONN MALE RT ANGLE PC SNAP ON J2	17-1246-000		1.000	EA	4					
20	04	2300812	CABLE ASSY 950 1ST LO PCL-606	2481085	A	1.000	EA	1					
21	06	3290152	TEST JACK WHITE R ANGLE TP1,TP2,TP3,TP4	430-101		4.000	EA	4					
22	04	3730041	IC CA3018 XSTR ARRAY U1	CA-3018		1.000	EA	4					

PRINT PHANTOM ITEMS
PRINT COMPONENTS
PRINT PHANTOM/COMPONENT COMMENTS

PARENT ITEM	CROSS REF ITEM	DESCRIPTION	BATCH QTY	ITEM TYPE	LOW LEVEL
9301607		LO 1ST PCL-606 910-920 MHZ RX	1	1	03
		ENGR DRAW 2002828-6 P	EFFEC 9/21/84	UNIT MEAS EA	PLANNER 440

BOM ITEM	LL CD	COMPONENT & CROSS REF.	DESCRIPTION & COMMENT	ENGINEERING DRAWING NUMBER	QUANTITY PER	UM	ITEM TYP	OPT NBR	FIRST OP SEQ	LT ADJ	EFFECTIVE DATES FROM	TO
23	04	3640315	XT FET J310 Q1,Q2	J310	2.000	EA	4					
24	04	3640273	XT MRF901 Q3,Q4	MRF 901	2.000	EA	4					
25	04	3630175	XT NP2N3866 05W500M055V.4A Q5	2N3866	1.000	EA	4					
26	05	2110005	HEATSINK TO 5-9 11-12 Q5	NF-204	1.000	EA	4					
27	06	3600145	DIO 1N4154 25V 4NS SI D035 CR1,CR2,CR3	1N4154	3.000	EA	4					
28	04	3610243	DIO 5082-0180 CR4	HP 5082-0180	1.000	EA	4					
29	06	4310272	CAP .01 50V 103M C7,C10,C12,C13,C14,C17,C23,C26,C27,C35,C36,C37, C42	5018EM50RD103K	13.000	EA	4					
30	06	4280079	CAP EPOX-DIP 10/25V C11,C16,C22,C25,C34	196D106X0025KAI	5.000	EA	4					
31	06	4280046	CAP EPOX-DIP 2.2/35V 20% C5,C6	196D225X0035JAI	2.000	EA	4					
32	04	4300125	CAP N750 DISC 22PF 5% C8	DTN-22	1.000	EA	4					
33	05	4300042	CAP NPO DISC 6.8PF C30,C45	DTZ-6R8	2.000	EA	4					
34	05	1050129	SCR BDRH SLTD 4/40 X 1/4 SST	BINDER HEAD	2.000	EA	4					
35	05	1310093	CLIP PCL-606	05C2882 B	16.000	EA	4					
36	06	4410478	RES 68K OHM 1/4W 10% R29	RC07GF683K	1.000	EA	4					
37	04	4300133	CAP NPO DISC 22PF 5% C24	DTZ-22	1.000	EA	4					
38	05	4300067	CAP NPO DISC 10PF 5% C4,C15,C31	DTZ-10	3.000	EA	4					
39	04	4300182	CAP NPO DISC 68PF 5% C9	DTZ-68	1.000	EA	4					
40	05	4350658	CAP CHIP 15 PF C40	1008150JP500X	1.000	EA	4					
41	05	4210084	CAP MICA DIP 18PF C18	DM-15-180J	1.000	EA	4					
42	04	4200069	CAP MICA DIP 100PF C32	DM-5-101J	1.000	EA	4					
43	04	4350492	CAP MICA DIP 6PF C20	DM5-060D	1.000	EA	4					
44	04	4350484	CAP MICA DIP 18PF C21	DM5-180J	1.000	EA	4					

PRINT PHANTOM ITEMS
PRINT COMPONENTS
PRINT PHANTOM/COMPONENT COMMENTS

PARENT ITEM	CROSS REF ITEM	DESCRIPTION	BATCH QTY	ITEM TYPE	LOW LEVEL
9301607		LO 1ST PCL-606 910-920 MHZ RX	1	1	03
		ENGR DRAW 2002828-6 P	EFFEC 9/21/84	UNIT MEAS EA	PLANNER 440

BOM ITEM	LL CO	COMPONENT & CROSS REF.	DESCRIPTION & COMMENT	ENGINEERING DRAWING NUMBER	QUANTITY PER	ITEM UM	TYP	OPT NBR	FIRST OP SEQ	LT ADJ	EFFECTIVE DATES FROM	TO
45	04	4370342	CAP VAR 2.5-18PF C19,C28,C29	GX818000	3.000	EA	4					
46	05	4350393	CAP CHIP 1 PF C44	100B1R0BP500X	1.000	EA	4					
47	04	4240024	CAP GL 10PF C38	UY01-100J	1.000	EA	4					
48	04	4240040	CAP GL 20PF C43	UY01-200J	1.000	EA	4					
49	07	4370201	CAP MIN VAR PC .8-10PC C39,C41	MYM010W	2.000	EA	4					
50	05	4310132	CAP DISC .01/50V C1,C2,C3	UK-50-103	3.000	EA	4					
51	06	4410122	RES 100 OHM 1/4W 10% R1,R10,R13	RC07GF101K	3.000	EA	4					
52	06	4410163	RES 220 OHM 1/4W 10% R2	RC07GF221K	1.000	EA	4					
53	05	4410361	RES 8.2K OHM 1/4W 10% R3	RC07GF822K	1.000	EA	4					
54	04	4410460	RES 56K OHM 1/4W 10% R30	RC07GF563K	1.000	EA	4					
55	05	4410171	RES 270 OHM 1/4W 10% R5	RC07GF271K	1.000	EA	4					
56	05	4410031	RES 15 OHM 1/4W 10% R6,R16,R17,R26,R27	RC07GF150K	5.000	EA	4					
57	06	4410155	RES 180 OHM 1/4W 10% R8,R15	RC07GF181K	2.000	EA	4					
58	05	4410080	RES 47 OHM 1/4W 10% R9,R22	RC07GF470K	2.000	EA	4					
59	06	4410288	RES 2.2K OHM 1/4W 10% R11,R14,R21	RC07GF222K	3.000	EA	4					
60	06	4410304	RES 3.3K OHM 1/4W 10% R12	RC07GF332K	1.000	EA	4					
61	06	4410247	RES 1K OHM 1/4W 10% R18,R23,R25	RC07GF102K	3.000	EA	4					
62	06	4410338	RES 4.7K OHM 1/4W 10% R7,R19,R24	RC07GF472K	3.000	EA	4					
63	05	1090182	SCR BORH SLTD 6/32 X 1/4 SST VR1	BINDER HEAD	5.000	EA	4					
64	06	4410221	RES 680 OHM 1/4W 10% R4	RC07GF681K	1.000	EA	4					
65	05	4410106	RES 68 OHM 1/4W 10% R28	RC07GF680K	1.000	EA	4					
66	06	4410023	RES 10 OHM 1/4W 10% R20	RC07GF100K	1.000	EA	4					

PRINT PHANTOM ITEMS
PRINT COMPONENTS
PRINT PHANTOM/COMPONENT COMMENTS

PARENT ITEM	CROSS REF ITEM	DESCRIPTION	BATCH QTY	ITEM TYPE	LOW LEVEL
9301607		LO 1ST PCL-606 910-920 MHZ RX	1	1	03
		ENGR DRAW 20D2828-6 P	EFFEC 9/21/84	UNIT MEAS EA	PLANNER 440

BOM ITEM	LL CD	COMPONENT & CROSS REF.	DESCRIPTION & COMMENT	ENGINEERING DRAWING NUMBER	QUANTITY PER	ITEM UM	ITEM TYP	OPT NBR	FIRST OP SEQ	LT ADJ	EFFECTIVE DATES FROM	TO
68	05	1090554	NUT HEX 6/32 SM PATT VR1	NUT 6/32 SM	1.000	EA	4					
69	05	1090588	WSHR LK #6 SR SST VR1	LOCKWASHER #6	1.000	EA	4					
70	05	1290188	SIL PAD VR1	7403-09-FR-51	1.000	EA	4					
71	06	4410213	RES 560 OHM 1/4W 10% R31	RC07GF561K	1.000	EA	4					
72	05	1130491	WASHER, SST 5710-35-16	5710-35-16	1.000	EA	4					
73	05	1641927	W BUSS 22GA	298	.300	FT	4					
74	04	3340809	XTAL PCL-606 RX Y1	30A0082 C	1.000	EA	4					

RF AMPLIFIER

Schematic 91B7284
Assembly 20D2836

The RF Amplifier module is a four-stage class C power amplifier designed to produce a nominal 8.0 W output power over the 940-960 MHz band when driven with a +20 dBm signal. The RF Amplifier obtains its power from the 12.5 Vdc regulated supply and draws approximately 2 A.

Forward and reflected power are sampled via a dual directional coupler, with RF detectors at the forward and reflected ports (CR701 and CR702, respectively). The detected samples are routed to the Metering and Status board, where they are scaled and relayed to the front panel meter. The front panel meter positions are FWD POWER and REFL POWER. Metering indications should be 0 dB for the FWD POWER position and typically below -10 dB in the REFL POWER position with a well matched load, as read on the dB scale.

Final transistor (Q704) current is sampled by the voltage drop across R705. The sample is routed to the Transmitter Control board, where two test points are provided (TP2 and TP3) across which the final current can be measured. The sensed voltage is then relayed to the Metering and Status board for front panel indication at the PA CURRENT position. Normal indications should be 1.2-1.7 A as read on the meter bottom scale.

A six-element low-pass filter is incorporated into the RF Amplifier.

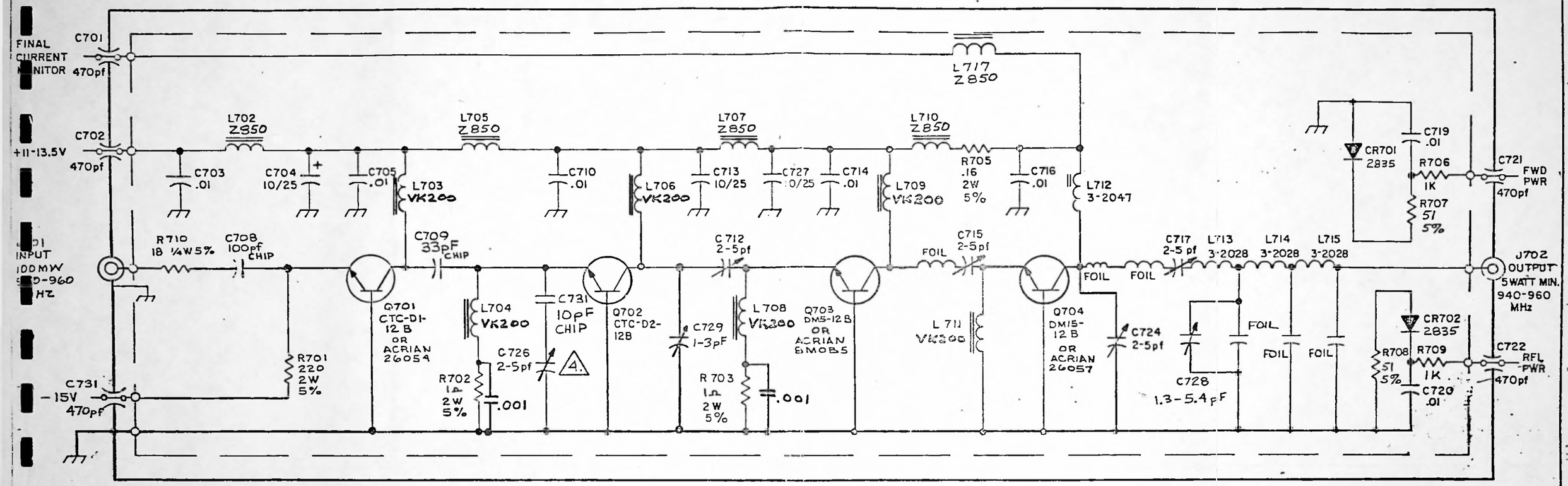

NOTES:

1. UNLESS OTHERWISE SPECIFIED RESISTOR VALUES ARE IN OHMS, 1/4W, 10%. CAPACITOR VALUES ARE IN MICROFARADS.
2. P.C. BOARD 51A5750.
3. COMPONENT LAYOUT 20D2836
4. FINAL VALUE FOR C726 CHOSEN IN TEST; 4-10pF NORMALLY USED BELOW 930 MHZ.

J	CHANGE L702, 704, 706, 708, 711 TO VK200 DELETE C230 ADD 2X.001 & 1.5C 23 APRIL 85	
	ADD NOTE 4 TO CONNECT TO Q704 CHG C724 RELOCATE C728 C729 WAS 2-7pF ADD C731 C726 WAS 4-10pF ECO 4087 26 MAR84 CH	
H	C729 WAS 1.5pf. C730 WAS 6.8pf. ECO 3835. S.J. 3/30/83	
G	DELETED FILM REV. CALLOUT. ECO 3615 S.J. 3-23-83	
F	REMOVED C706 AND L701. ECO 3721 1-4-83 S.J	
E	CHANGES PER ECO 3617 27AUG82 CH	
D1	RE-RELEASE TO PROD. ECO 3366 3MAR82 CH	
C1	ADD C728 ECO 3367 3MAR82 CH	
B1	8.2NH WAS 8.2MH PCO 3197, 11-10-81 JGC	
B	C708 WAS 1.C701 ADDED C718, L716 J702 WAS J701 J701 WAS P101 ECO 3181, 11-2-81 JGC	
A	REL. FOR PROD. ECO 3119 2SEPT81 CH	

REVISIONS | DATE | MGMT. APPR.

MOSELEY ASSOCIATES, INC.
SANTA BARBARA RESEARCH PARK
GOLETA, CALIFORNIA 93117

SCHEMATIC
950MHz POWER AMPLIFIER XMTR

TOL: FRACT. ± 1/32, .XX ± .030, .XXX ± .010, ∠ ± 1/2°

DWN	JC	8-18-81	SCALE: NONE
CHK		8/28/81	91B7284
ENG		8/28/81	

J

MADE ON DIETERICH-POST CLEARPRINT 1020-H

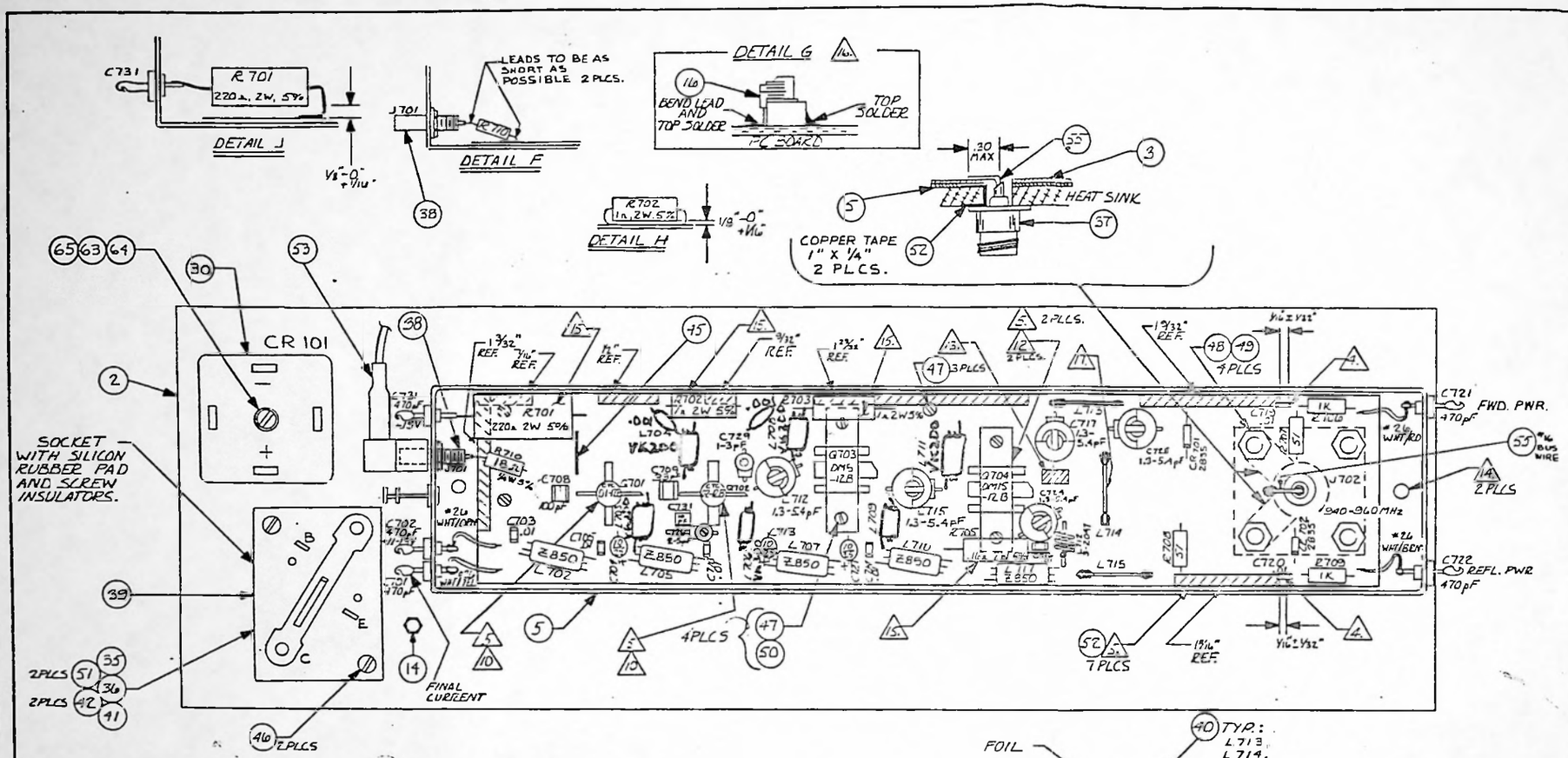

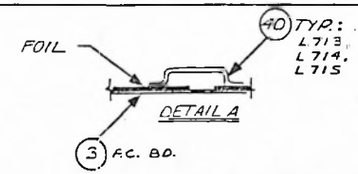

NOTES:

1. UNLESS OTHERWISE SPECIFIED, RESISTOR VALUES ARE IN OHMS 1/4 W, 10%. CAPACITOR VALUES ARE IN MICROFARADS.
2. P.C. BOARD 51A5730
3. SCHEMATIC 81B7284.
4. INSTALL C719, C720 AFTER P.C. BD HAS BEEN SECURED INSIDE ENCLOSURE AND TO HEAT SINK.
5. INSTALL COPPER TAPE, ITEM (52), CUT IN 3/16" WIDTHS, TO LENGTHS REFERENCED, WRAPPED AROUND EDGE OF BOARD AND SOLDERED TO BOTH SIDES, 7 PLACES. UNLESS OTHERWISE SPECIFIED, TAPE SHALL EXTEND TO EDGE OF CIRCUITRY, ±0 -1/16" EACH END. (10 PLACES)

   TAPE CUTOUTS FOR Q703 AND Q704 AS SHOWN IN DETAIL B.

   TAPE HOLES FOR Q701 AND Q702 BETWEEN WIDE LEADS IN MANNER SHOWN IN DETAIL C.
8. USE SILVER BEARING SOLDER (FED SPEC. QQ-S-571 OR EQUIV) KESTER ALLOY SN62 OR EQUIV, ON ALL PADS FOR CHIP CAPACITORS. DO NOT MIX SOLDER.
9. C726 IS EFJ 278-0410-005 (4-10pF), OR JOHANSON 9372 (3-12pF).
10. INSTALL Q701 AND Q702 STUD NUTS WITH TORQUE WRENCH AND SET TO 5 IN./LB ± 1 IN.-LBS. USE #8 EXT TOOTH WASHERS (ITEM (43)) AND 8-32 NUTS (ITEM (44)) 2 PLCS. USE HEAT SINK COMPOUND. SEE DETAIL D FOR ORIENTATION.

    SOLDER Q701 AND Q702 TABS AFTER ASSEMBLY HAS BEEN MOUNTED TO HEAT SINK.
12. USE HEAT SINK COMPOUND WHILE INSTALLING Q703 AND Q704.
13. BEFORE INSTALLING C724 (ITEM (16)), SOLDER A 3/16" X 3/16" PIECE OF COPPER TAPE (ITEM (52)) TO CIRCUITRY AS SHOWN.
14. ALIGN WITH TAPPED HOLE IN HEAT SINK, BOTH ENDS.
15. INSTALL R701-R703, R705 1/8" -0 +1/16" ABOVE P.C. BOARD. R702 LEADS BENT AS SHOWN: DETAIL H. INSTALL R701 AS SHOWN. DETAIL J.
16. TRIM ROTOR LEADS, BEND STATOR LEADS (90°±10°), OF C712, C715, C717 & C724 FLUSH WITH BOTTOM OF CAPS, TOP SOLDER TO BOARD - SEE DETAIL G.
17. SOLDER EYELETS BOTH SIDES.

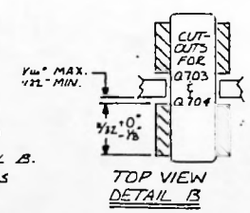

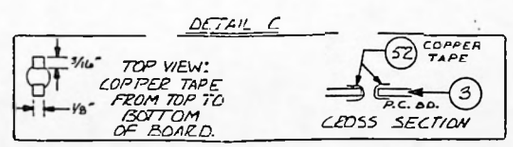

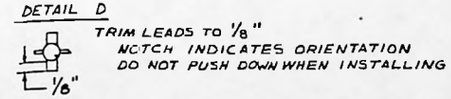

USED ON PCL-606

ADD VK200, .001 CAP, DELETE C730.

MOSELEY ASSOCIATES, INC.

COMPONENT LAYOUT 940 MHz AMP. XMTR

20D28836

SHEET 1 OF 2

WIRE GUIDE

FROM	TO	COLOR
A9	A7 J15	GRN
A9	A7 J19	BRN
A9	A7 J18	BLK
A9	A7 J17	VIO
A9	A7 J16	BLU #16
A9	A7 J13	ORN
A9	A7 J14	YEL/WHT
A9	A7 J8	BLU #22
A9	A8 J2-3	WHT/ORN
A9	A8 J2-4	WHT/YEL
A9	A8 J2-2	WHT/RED
A9	A8 J2-1	WHT/BLD

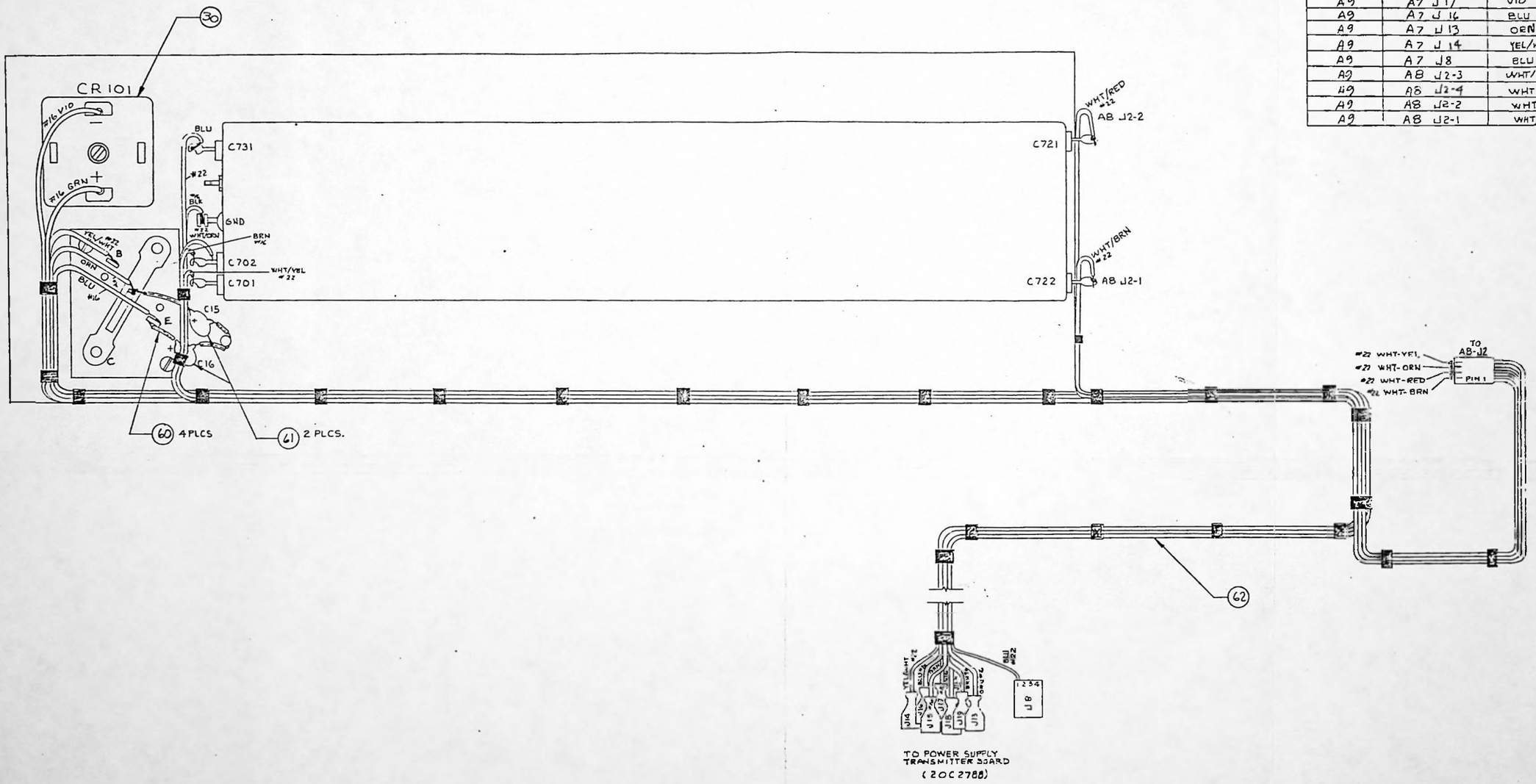

USED ON PCL-606 XMTR
SHEET 2 OF 2

ITEM NO: 9301334

MOSELEY ASSOCIATES, INC.
SANTA BARBARA INDUSTRIAL PARK
GOLETA, CALIFORNIA 93117

COMPONENT LAYOUT
950 MHZ AMPLIFIER XMTR

20C2836 U

SHEET 2 OF 2

PRINT PHANTOM ITEMS
PRINT COMPONENTS
PRINT PHANTOM/COMPONENT COMMENTS

PARENT ITEM 9301334 | CROSS REF ITEM | DESCRIPTION RFA 950MHZ PCL-606 ENGR DRAW 2002836 U | BATCH QTY 1 | ITEM TYPE 1 UNIT MEAS EA | LOW LEVEL 03 PLANNER 440

BOM ITEM	LL CD	COMPONENT & CROSS REF.	DESCRIPTION & COMMENT	ENGINEERING DRAWING NUMBER		QUANTITY PER	ITEM UM	TYP	OPT NBR	FIRST OP SEQ	LT ADJ	EFFECTIVE DATES FROM	TO
1	04	2090199	ENCL COVER 950 MHZ PA	05C2510-2	G	1.000	EA	2					
2	04	2110294	HEATSINK 950MHZ PWR AMP PCL606	05C2829	D1	1.000	EA	2					
3	04	3470267	PCB 950MHZ PWR AMP XMTR	51A5750	B1	1.000	EA	9					
4	04	4010880	COIL AIR 3T 22BUS 1/4 L703,L704,L706,L708,L709,L712	3-2047	A	6.000	EA	1					
5	04	2091254	ENCL BASE 950 MHZ PA PCL-606	05C2510-1	G	1.000	EA	2					
6	04	4020368	FERROX-CUBE 850 OHM L702,L705,L707,L710,L717	VK 200 20/4B		5.000	EA	4					
7	04	4010567	COIL AIR 6T 22BUS 7/32LH L711	3-2022	B0	1.000	EA	1					
8	05	4460028	RES 18 OHM 1/4W 5% R710	RC07GF180J		1.000	EA	4					
9	04	4590022	RES .16 OHM 2W 5% R705	BWH .16 2W 5%		1.000	EA	4					
10	05	4590063	RES 1 OHM 2W 5% R702,R703	BWH 1 2W 5%		2.000	EA	4					
11	04	4490017	RES 220 OHM 2W 5% R701	RC42GF221J		1.000	EA	4					
12	04	4460036	RES 51 OHM 1/4W 5% R707,R708	RC07GF510J		2.000	EA	4					
13	06	4410247	RES 1K OHM 1/4W 10% R706,R709	RC07GF102K		2.000	EA	4					
14	04	3290582	TERM	1300T 4.5		1.000	EA	4					
16	04	4370003	CAP PC MT VAR 5.4-1.3PF C712,C715,C717,C724,C728	187-0103-005		5.000	EA	4					
17	04	4370284	CAP 2-5PF C726	278-0105-005		1.000	EA	4					
18	05	4350401	CAP CHIP 100 PF C708	1008101JP500X		1.000	EA	4					
19	04	4350146	CAP CHIP 33PF 5% P80 C709	C17AH330J500PS		1.000	EA	4					
20	04	4350161	CAP .01UF CHIP C703,C705,C710,C714,C716,C719,C720	W1008F103MP		7.000	EA	4					
21	06	4280079	CAP EPOX-DIP 10/25V C704,C713,C727	196D106X0025KAI		3.000	EA	4					
23	04	4350542	CAP CHIP 2.7 PF C730	1008R7CP500X		1.000	EA	4					
26	04	4370276	CAP CER VAR 1-3PF C729	MC50A1H030		1.000	EA	4					
28	05	4350591	CAP CHIP 10 PF C731	1008100JP500X		1.000	EA	4					

PRINT PHANTOM ITEMS
PRINT COMPONENTS
PRINT PHANTOM/COMPONENT COMMENTS

PARENT ITEM	CROSS REF ITEM	DESCRIPTION	BATCH QTY	ITEM TYPE	LOW LEVEL
9301334		RFA 950MHZ PCL-606 ENGR DRAW 2002836 U	1	1 UNIT MEAS EA	03 PLANNER 440

BOM ITEM	LL CD	COMPONENT & CROSS REF.	DESCRIPTION & COMMENT	ENGINEERING DRAWING NUMBER	QUANTITY PER	UM	ITEM TYP	OPT NBR	FIRST OP SEQ	LT ADJ	EFFECTIVE DATES FROM	TO
29	04	3610045	DIO 5082-2835 FAST CR701,CR702	5082-2835	2.000	EA	4					
30	04	3610284	DIO,BRIDGE, 100V/25A CR101	MDA2501	1.000	EA	4					
31	04	3640117	XT 26064 3.0W960M15V0.5A Q702	26064	1.000	EA	4					
32	04	3640109	XT NPD1-12B 5.8W866M036V.25A Q701	D1-12B	1.000	EA	4					
33	04	3640133	XT NPDM5-12B 29W 036V02A Q703	DM5-12B	1.000	EA	4					
34	04	3640364	XT,RF PWR,10W,806-960 MHZ Q704	26057	1.000	EA	4					
35	04	3650363	RGLTR LM338K VARV 5.0A TO3 VR1	LM338-K-STEEL	1.000	EA	4					
36	04	1250190	COVER INSULATION TO-3	A22-2003	1.000	EA	4					
37	04	3030178	CONN TYPE N RCPT J702	UG-58 A/U	1.000	EA	4					
38	06	3030400	CONN RF, 17-0219-000 J701	17-0219-000	1.000	EA	4					
39	04	3250214	SKT XSTR/LAM	LST2202-2	1.000	EA	4					
40	04	4010625	COIL AIR L713,L714,L715	3-2028 N/C	3.000	EA	1					
41	04	1290162	SIL PAD VR1	7403-09-FR-05	1.000	EA	4					
42	04	1090638	BSHG MS-10 NYL #6 VR1	B51547F002	2.000	EA	4					
43	04	1130301	WSHR LK #8 EXT T SST	LOCKWASHER #8	2.000	EA	4					
44	05	1130277	NUT HEX 8/32 1/4 FLATS SST	NUT 8/32 SM	2.000	EA	4					
45	05	1641927	W BUSS 22GA	298	.080	FT	4					
46	05	1050103	SCR PNDH PHPS 4/40 X 3/16 SS	BINDER HEAD	2.000	EA	4					
47	05	1050145	SCR PNHD PHPS 4/40 X 5/16 SS	BINDER HEAD	8.000	EA	4					
48	04	1050202	SCR PNHD PHPS 4/40 X 9/16 SS	BINDER HEAD	4.000	EA	4					
49	06	1050582	NUT HEX 4/40 SM PATT	NUT 4/40	4.000	EA	4					
50	05	1050632	WSHR LK #4 SR CD PL	LOCKWASHER #4	4.000	EA	4					

PRINT PHANTOM ITEMS
PRINT COMPONENTS
PRINT PHANTOM/COMPONENT COMMENTS

PARENT ITEM 9301334 | CROSS REF ITEM | DESCRIPTION RFA 950MHZ PCL-606 ENGR DRAW 2002836 U | BATCH QTY 1 | ITEM TYPE 1 UNIT MEAS EA | LOW LEVEL 03 PLANNER 440

BOM ITEM	LL CD	COMPONENT & CROSS REF.	DESCRIPTION & COMMENT	ENGINEERING DRAWING NUMBER	QUANTITY PER	UM	ITEM TYP	OPT NBR	FIRST OP SEQ	LT ADJ	EFFECTIVE DATES FROM	TO
51	04	1090471	SCR PNHD PHPS #6 X 1/2	PAN HEAD-SH MET	2.000	EA	4					
52	04	1560390	TAPE COPPER 1	1194	5.000	IN	4					
53	04	2202000	CA ASSY SMB/RT SMB/RT 16"	248107A-2 A0	1.000	EA	9					
55	06	1641893	W BUSS 16GA	295	1.000	FT	4					
56	05	1641257	W STRD 26GA WHITE-YELLOW	BU-734-26#94	.080	FT	4					
57	05	1641240	W STRD 26GA WHITE-ORANGE	BU-734-26#93	.080	FT	4					
58	05	1641232	W STRD 26GA WHITE-RED	BU-734-26#92	.080	FT	4					
59	05	1641224	W STRD 26GA WHITE-BROWN	BU-734-26#91	.080	FT	4					
60	05	1560242	TBG TEFLON 24AWG NAT	TFT200-24	.250	FT	4					
61	06	4280046	CAP EPOX-DIP 2.2/35V 20% C15,C16	196D225X0035JAI	2.000	EA	4					
62	04	2350619	HARN ASSY 950 AMP PCL-606 XMTR	29C1051 F	1.000	EA	1					
63	05	1130129	SCR PNHD PHPS 8/32 X 3/4 SST	BINDER HEAD	1.000	EA	4					
64	05	1130319	WSHR LK #8 SR SST	LOCKWASHER #8	1.000	EA	4					
65	05	1130335	WSHR FL #8 SST	AN960-C8	1.000	EA	4					

METERING AND STATUS

Schematic 91D7264
Parts List 20D2818-2

The transmitter Metering and Status board includes three main sections:

1. Eight separate metering functions
2. Power supply and operating status indicators
3. RADIATE/STANDBY switch

Metering Functions

Potentiometers R1 though R8 are used as input adjustments. Resistors R31 through R38 have been selected to increase the allowable input voltage. The values selected are explained in note 4 on the schematic.

U4 acts as a switch to select one of the eight metering channels. The selected channel is based on a binary code produced by U2, which is an up/down counter. U2 is incremented and decremented by METER FUNCTION switch S1, U3, and associated circuitry.

U1 decodes the output of the counter and, by activating one of eight LEDs, indicates the position selected.

The output of U4 (the multiplex switch) is buffered and amplified by U7. The output of this buffer is used by half of U5 to indicate the polarity of the input signal (red equals plus, and green equals minus). The output of U7 also drives the absolute value amplifier.

Figure F-1 is a simplified diagram of the absolute value amplifier. It is included to show the difference in gain between a negative and positive input. The values shown in parentheses are for a typical full-scale input. The output of the absolute amplifier is connected to U5, the meter ballistics amplifier.

U5 acts as an attenuator and meter acceleration amplifier. R9 is used to adjust the meter ballistics response. The output of this circuit is connected to the meter through J1.

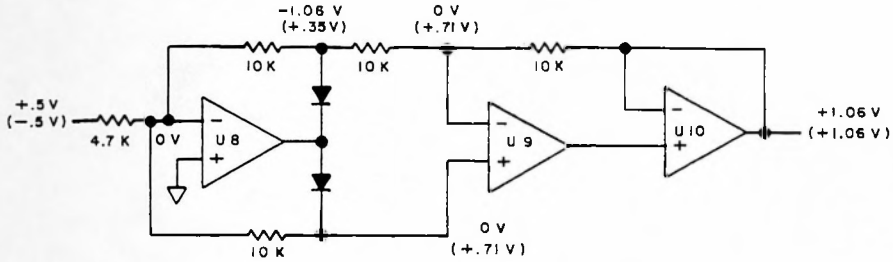

Figure F-1. Simplified diagram of absolute value amplifier.

Status Indicators

LEDs CR21 through CR24 are used to indicate the status of the power supplies. CR17 and CR18 indicate the status of the transmitter. U11 is used as a TTL threshold detector. R97 and R101 set the threshold at approximately 2 volts referred to the input. U12 and associated circuitry are not presently used.

Control Switch

RADIATE/STANDBY switch S2 is a double-pole, double-throw switch used to activate logic circuits within the transmitter, and is connected through the harness to rear panel connector A10-J1-C for remote indication of the RADIATE/STANDBY mode.

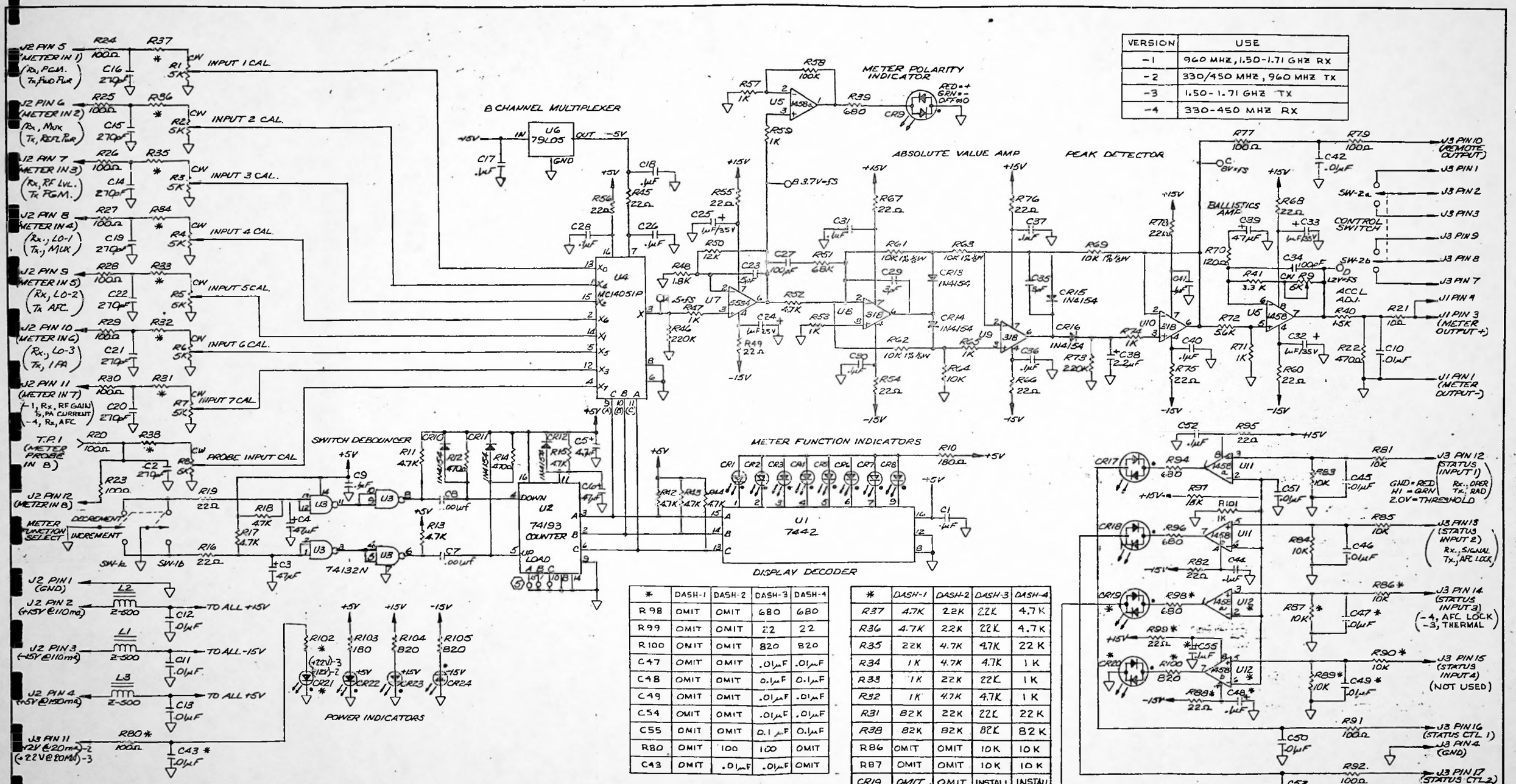

VERSION	USE
-1	960 MHZ, 1.50-1.71 GHZ RX
-2	330/450 MHZ, 960 MHZ TX
-3	1.50-1.71 GHZ TX
-4	330-450 MHZ RX

*	DASH-1	DASH-2	DASH-3	DASH-4
R98	OMIT	OMIT	680	680
R99	OMIT	OMIT	22	22
R100	OMIT	OMIT	820	820
C47	OMIT	OMIT	.01µF	.01µF
C48	OMIT	OMIT	0.1µF	0.1µF
C49	OMIT	OMIT	.01µF	.01µF
C54	OMIT	OMIT	.01µF	.01µF
C55	OMIT	OMIT	0.1 µF	0.1µF
R80	OMIT	100	100	OMIT
C43	OMIT	.01µF	.01µF	OMIT

*	DASH-1	DASH-2	DASH-3	DASH-4
R37	4.7K	2.2K	2.2K	4.7K
R36	4.7K	2.2K	2.2K	4.7K
R35	22K	4.7K	4.7K	22K
R34	1K	4.7K	4.7K	1K
R33	1K	2.2K	2.2K	1K
R32	1K	4.7K	4.7K	1K
R31	82K	22K	22K	22K
R38	82K	82K	82K	82K
R86	OMIT	OMIT	10K	10K
R87	OMIT	OMIT	10K	10K
CR19	OMIT	OMIT	INSTALL	INSTALL
CR20	OMIT	OMIT	OMIT	OMIT
CR21	OMIT	INSTALL	INSTALL	OMIT
R88	OMIT	OMIT	22	22
R89	OMIT	OMIT	10K	10K
R90	OMIT	OMIT	10K	10K
SW-2	ON NONE ON	ON NONE ON	ON NONE ON	ON NONE ON
U12	OMIT	OMIT	INSTALL	INSTALL
R102	OMIT	560	120, ½W	560
R93	OMIT	OMIT	100	100

NOTES:

1. UNLESS OTHERWISE SPECIFIED, ALL RESISTOR VALUES ARE ¼W 10%, ALL CAPACITOR VALUES ARE IN MICROFARADS.
2. P.C. BOARD 51D5934
3. COMPONENT LAYOUT 20D2818
4. R31 THRU R38 VALUES ARE BASED ON THE FOLLOWING DESIGN CRITERIA:
   FULL SCALE RANGE
   1V TO 3.2V → R = 4.7K
   3.2V TO 10V → R = 22K
   10V TO 32V → R = 82K

(5) U2 PINS 15, 1 & 10 CONTROL METER SELECT UPON POWER UP. AS WIRED, INPUT 1 WILL BE SELECTED. IF ANOTHER INPUT IS PREFERRED DRILL HOLE(S) OR CUT TRACES PER CHART BELOW:

INPUT SELECT	1	2	3	4	5	6	7	8
CUT TRACE	NONE	15	1	10&15	10	10&15	10&10	1,10&15

6. ALL DIAGNOSTIC VOLTAGES ARE ± 20%

MOSELEY ASSOCIATES, INC.
SANTA BARBARA, CALIFORNIA

SCHEM. - METERING AND STATUS BOARD

91D7264 J

PRINT PHANTOM ITEMS
PRINT COMPONENTS
PRINT PHANTOM/COMPONENT COMMENTS

PARENT ITEM	CROSS REF ITEM	DESCRIPTION METERING & STATUS BD PCL-606	BATCH QTY 1	ITEM TYPE 1	LOW LEVEL 04
9204165		ENGR DRAW 2002818-01 R		UNIT MEAS EA	PLANNER 443

BOM ITEM	LL CD	COMPONENT & CROSS REF.	DESCRIPTION & COMMENT	ENGINEERING DRAWING NUMBER	QUANTITY PER	UM	ITEM TYP	OPT NBR	FIRST OP SEQ	LT ADJ	EFFECTIVE DATES FROM	TO
1	05	9205006	SUBASSY,NEUTER,MTRG/STAT BD	2002818-05 R	1.000	EA	1					
2	06	4410338	RES 4.7K OHM 1/4W 10% R36,R37	RC07GF472K	2.000	EA	4					
3	06	4410411	RES 22K OHM 1/4W 10% R35	RC07GF223K	1.000	EA	4					
4	06	4410247	RES 1K OHM 1/4W 10% R32,R33,R34	RC07GF102K	3.000	EA	4					
5	05	4410486	RES 82K OHM 1/4W 10% R31,R38	RC07GF823K	2.000	EA	4					
6	05	3190766	SW,DPDT,ON-NONE-(ON) SW2	0601-210	1.000	EA	4					

PRINT PHANTOM ITEMS
PRINT COMPONENTS
PRINT PHANTOM/COMPONENT COMMENTS

PARENT ITEM 9204199 | CROSS REF ITEM | DESCRIPTION METERING & STATUS BD PCL-606TX ENGR DRAW 2002818-02 R | BATCH QTY 1 | ITEM TYPE 1 UNIT MEAS EA | LOW LEVEL 04 PLANNER 443

BOM ITEM	LL CD	COMPONENT & CROSS REF.	DESCRIPTION & COMMENT	ENGINEERING DRAWING NUMBER	QUANTITY PER	UM	ITEM TYP	OPT NBR	FIRST OP SEQ	LT ADJ	EFFECTIVE DATES FROM	TO
1	05	9205006	SUBASSY,NEUTER,MTRG/STAT BD	2002818-05 R	1.000	EA	1					
2	06	4410411	RES 22K OHM 1/4W 10% R31,R33,R36,R37	RC07GF223K	4.000	EA	4					
3	06	4410338	RES 4.7K OHM 1/4W 10% R32,R34,R35	RC07GF472K	3.000	EA	4					
4	05	4410486	RES 82K OHM 1/4W 10% R38	RC07GF823K	1.000	EA	4					
5	06	3390614	LED GRN 7-12@20 DIFFUSED 75DEG CR21	HLMP-3507	1.000	EA	4					
6	06	3390606	LED HOUSE P-C-LITE CR21HSG	PCR 740 CTP	1.000	EA	4					
7	05	3190774	SW DPDT ON NONE ON 577 2112 SW2	0601-201	1.000	EA	4					
8	05	4410213	RES 560 OHM 1/4W 10% R102	RC07GF561K	1.000	EA	4					
9	06	4410122	RES 100 OHM 1/4W 10% R80	RC07GF101K	1.000	EA	4					
10	06	4310272	CAP .01 50V X7R 10% C43	5018EM50RD103K	1.000	EA	4					

PRINT PHANTOM ITEMS
PRINT COMPONENTS
PRINT PHANTOM/COMPONENT COMMENTS

PARENT ITEM 9204983 | CROSS REF ITEM | DESCRIPTION ASSY MET/STATUS 1.5-1.71GHZ TX ENGR DRAW 2002818-03 R | BATCH QTY 1 | ITEM TYPE 1 UNIT MEAS EA | LOW LEVEL 04 PLANNER 443

BOM ITEM	LL CD	COMPONENT & CROSS REF.	DESCRIPTION & COMMENT	ENGINEERING DRAWING NUMBER	QUANTITY PER	UM	ITEM TYP	OPT NBR	FIRST OP SEQ	LT ADJ	EFFECTIVE DATES FROM	TO
1	05	9205006	SUBASSY,NEUTER,MTRG/STAT BD	2002818-05 R	1.000	EA	1					
2	06	4410411	RES 22K OHM 1/4W 10% R31,R33,R36,R37	RC07GF223K	4.000	EA	4					
3	06	4410338	RES 4.7K OHM 1/4W 10% R32,R34,R35	RC07GF472K	3.000	EA	4					
4	05	4410486	RES 82K OHM 1/4W 10% R38	RC07GF823K	1.000	EA	4					
5	06	3390614	LED GRN T-12020 DIFFUSED 75DEG CR21	HLMP-3507	1.000	EA	4					
6	06	3390606	LED HOUSE P-C-LITE CR19HSG,CR21HSG	PCR 740 CTP	2.000	EA	4					
7	05	3190774	SW DPDT ON NONE ON 577 2112 SW2	0601-201	1.000	EA	4					
8	06	3730215	IC LM1458N OPAMP DUAL U12	LM-1458N	1.000	EA	4					
9	05	4420279	RES 1.2K OHM 1/2W 10% R102	RC20GF122K	1.000	EA	4					
10	06	4410379	RES 10K OHM 1/4W 10% R86,R87,R89,R90	RC07GF103K	4.000	EA	4					
11	06	4410049	RES 22 OHM 1/4W 10% R88,R99	RC07GF220K	2.000	EA	4					
12	06	4410122	RES 100 OHM 1/4W 10% R80,R93	RC07GF101K	2.000	EA	4					
13	06	4410221	RES 680 OHM 1/4W 10% R98	RC07GF681K	1.000	EA	4					
14	06	4410239	RES 820 OHM 1/4W 10% R100	RC07GF821K	1.000	EA	4					
15	06	4310264	CAP .1 50V 25U 20% C48,C55	5020ES50RD104	2.000	EA	4					
16	06	4310272	CAP .01 50V X7R 10% C43,C47,C49,C54	5018EM50RD103K	4.000	EA	4					
17	06	3390598	LED DUAL CR19	521-9177	1.000	EA	4					
18	06	3250016	SKT DUAL IN LINE 8 PIN U12	640463-1	1.000	EA	4					

PRINT PHANTOM ITEMS
PRINT COMPONENTS
PRINT PHANTOM/COMPONENT COMMENTS

PARENT ITEM	CROSS REF ITEM	DESCRIPTION METERING/STATUS ASSY 300-480	BATCH QTY 1	ITEM TYPE 1	LOW LEVEL 04
9204769		ENGR DRAW 2002818-04 R		UNIT MEAS EA	PLANNER 443

BOM ITEM	LL CD	COMPONENT & CROSS REF.	DESCRIPTION & COMMENT	ENGINEERING DRAWING NUMBER	QUANTITY PER	UM	ITEM TYP	OPT NBR	FIRST OP SEQ	LT ADJ	EFFECTIVE DATES FROM	TO
1	05	9205006	SUBASSY,NEUTER,MTRG/STAT BD	2002818-05 R	1.000	EA	1					
2	06	4410338	RES 4.7K OHM 1/4W 10% R36,R37	RC07GF472K	2.000	EA	4					
3	06	4410411	RES 22K OHM 1/4W 10% R31,R35	RC07GF223K	2.000	EA	4					
4	06	4410247	RES 1K OHM 1/4W 10% R32,R33,R34	RC07GF102K	3.000	EA	4					
5	05	4410486	RES 82K OHM 1/4W 10% R38	RC07GF823K	1.000	EA	4					
6	06	3390598	LED DUAL CR19	521-9177	1.000	EA	4					
7	06	3390606	LED HOUSE P-C-LITE CR19HSG	PCR 740 CTP	1.000	EA	4					
8	05	3190766	SW,DPDT,ON-NONE-(ON) SW2	0601-210	1.000	EA	4					
9	05	4410213	RES 560 OHM 1/4W 10% R102	RC07GF561K	1.000	EA	4					
10	06	3730215	IC LM1458N OPAMP DUAL U12	LM-1458N	1.000	EA	4					
11	06	4410379	RES 10K OHM 1/4W 10% R86,R87,R89,R90	RC07GF103K	4.000	EA	4					
12	06	4410049	RES 22 OHM 1/4W 10% R88,R99	RC07GF220K	2.000	EA	4					
13	06	4410122	RES 100 OHM 1/4W 10% R93	RC07GF101K	1.000	EA	4					
14	06	4410221	RES 680 OHM 1/4W 10% R98	RC07GF681K	1.000	EA	4					
15	06	4410239	RES 820 OHM 1/4W 10% R100	RC07GF821K	1.000	EA	4					
16	06	4310272	CAP .01 50V X7R 10% C47,C49,C54	5018EM50RD103K	3.000	EA	4					
17	06	4310264	CAP .1 50V 25U 20% C48,C55	5020ES50RD104	2.000	EA	4					
18	06	3250016	SKT DUAL IN LINE 8 PIN U12	640463-1	1.000	EA	4					

PRINT PHANTOM ITEMS
PRINT COMPONENTS
PRINT PHANTOM/COMPONENT COMMENTS

PARENT ITEM CROSS REF ITEM DESCRIPTION SUBASSY,NEUTER,MTRG/STAT BD BATCH QTY 1 ITEM TYPE 1 LOW LEVEL 05
9205006 ENGR DRAW 2002818-05 R UNIT MEAS EA PLANNER 443

BOM ITEM	LL CO	COMPONENT & CROSS REF.	DESCRIPTION & COMMENT	ENGINEERING DRAWING NUMBER	QUANTITY PER	ITEM UM	ITEM TYP	OPT NBR	FIRST OP SEQ	LT ADJ	EFFECTIVE DATES FROM	TO
1	06	3473048	PCB METERING & STATUS PCL-606	5105934 C	1.000	EA	9					
3	06	3730173	IC LM318N OPAMP HISPEED U8,U9,U10	LM-318N	3.000	EA	4					
4	06	3730215	IC LM1458N OPAMP DUAL U5,U11	LM-1458N	2.000	EA	4					
5	06	3660206	IC SN7442N BCD-DECIMAL U1	SN7442N	1.000	EA	4					
6	06	3660420	IC SN74132N QU 2IN NAND ST U3	SN74132N	1.000	EA	4					
7	06	3660602	IC SN74193N BINUPDWNCO2CLCK U2	SN74193N	1.000	EA	4					
8	06	3680139	IC MC14051P 8CH MUX R280 7V U4	MC14051P	1.000	EA	4					
9	06	3650132	RGLTR MC79L05 05V 0.1A TO92 U6	MC79L05 ACP	1.000	EA	4					
10	06	3730728	IC NE5534AN OPAMP LO NOISE U7	NE-5534AN	1.000	EA	4					
11	06	3250016	SKT DUAL IN LINE 8 PIN U5,U7,U8,U9,U10,U11	640463-1	6.000	EA	4					
12	06	3250024	SKT DUAL IN LINE 14 PIN U3	640357-1	1.000	EA	4					
13	06	3250032	SKT DUAL IN LINE 16 PIN U1,U2,U4	640358-1	3.000	EA	4					
17	06	4410023	RES 10 OHM 1/4W 10% R21	RC07GF100K	1.000	EA	4					
18	06	4410049	RES 22 OHM 1/4W 10% R16,R19,R45,R49,R54,R55,R56,R60,R66,R67,R68,R75, R76,R78,R82,R95	RC07GF220K	16.000	EA	4					
19	06	4410122	RES 100 OHM 1/4W 10% R20,R23,R24,R25,R26,R27,R28,R29,R30,R77,R79,R91, R92	RC07GF101K	13.000	EA	4					
20	06	4410130	RES 120 OHM 1/4W 10% R70	RC07GF121K	1.000	EA	4					
21	06	4410155	RES 180 OHM 1/4W 10% R10,R103	RC07GF181K	2.000	EA	4					
22	06	4410205	RES 470 OHM 1/4W 10% R12,R14,R22	RC07GF471K	3.000	EA	4					
24	06	4410239	RES 820 OHM 1/4W 10% R104,R105	RC07GF821K	2.000	EA	4					
25	06	4410247	RES 1K OHM 1/4W 10% R47,R53,R57,R59,R65,R71,R74,R101	RC07GF102K	8.000	EA	4					
26	06	4410262	RES 1.5K OHM 1/4W 10% R40	RC07GF152K	1.000	EA	4					

PRINT PHANTOM ITEMS
PRINT COMPONENTS
PRINT PHANTOM/COMPONENT COMMENTS

PARENT ITEM	CROSS REF ITEM	DESCRIPTION	BATCH QTY	ITEM TYPE	LOW LEVEL
9205006		SUBASSY,NEUTER,MTRG/STAT BD ENGR DRAW 20D2818-05 R	1	1 UNIT MEAS EA	05 PLANNER 443

BOM ITEM	LL CO	COMPONENT & CROSS REF.	DESCRIPTION & COMMENT	ENGINEERING DRAWING NUMBER	QUANTITY PER	UM	ITEM TYP	OPT NBR	FIRST OP SEQ	LT ADJ	EFFECTIVE DATES FROM	TO
27	06	4410270	RES 1.8K OHM 1/4W 10% R48	RC07GF182K	1.000	EA	4					
28	06	4410387	RES 12K OHM 1/4W 10% R50	RC07GF123K	1.000	EA	4					
29	06	4410338	RES 4.7K OHM 1/4W 10% R11,R13,R15,R17,R18,R42,R43,R44,R52	RC07GF472K	9.000	EA	4					
30	06	4410346	RES 5.6K OHM 1/4W 10% R72	RC07GF562K	1.000	EA	4					
31	06	4410379	RES 10K OHM 1/4W 10% R64,R81,R83,R84,R85	RC07GF103K	5.000	EA	4					
32	06	4410395	RES 15K OHM 1/4W 10% R97	RC07GF153K	1.000	EA	4					
33	06	4410478	RES 68K OHM 1/4W 10% R51	RC07GF683K	1.000	EA	4					
34	06	4410494	RES 100K OHM 1/4W 10% R58	RC07GF104K	1.000	EA	4					
35	06	4410536	RES 220K OHM 1/4W 10% R46,R73	RC07GF224K	2.000	EA	4					
36	06	4410304	RES 3.3K OHM 1/4W 10% R41	RC07GF332K	1.000	EA	4					
38	06	4630729	POT CER PC PIN 5K OHM .75W 20I R1,R2,R3,R4,R5,R6,R7,R8,R9	43P502T050	9.000	EA	4					
39	06	4510145	RES 10.0K OHM 1/8W 1% R61,R62,R63,R69	RN55C1002F	4.000	EA	4					
40	06	4210035	CAP MICA DIP 3PF +/- 0.5 C29,C35	DM-15-030D	2.000	EA	4					
41	06	4210043	CAP MICA DIP 5PF +/- 0.5 C23	DM-15-050D	1.000	EA	4					
42	06	4210266	CAP MICA DIP 100PF 5% C27,C34	DM-15-101J	2.000	EA	4					
43	06	4310074	CAP CER DISC 270PF C2,C14,C15,C16,C19,C20,C21,C22	DD-271	8.000	EA	4					
44	06	4310272	CAP .01 50V X7R 10% C10,C11,C12,C13,C42,C45,C46,C50,C51,C53	5018EM50RD103K	10.000	EA	4					
45	06	4310264	CAP .1 50V 25U 20% C1,C9,C17,C18,C26,C28,C30,C31,C36,C37,C40,C41, C44,C52	5020ES50RD104	14.000	EA	4					
46	06	4280038	CAP EPOX-DIP 1/35V C24,C25,C32,C33	196D105X0035HAI	4.000	EA	4					
47	06	4280046	CAP EPOX-DIP 2.2/35V 20% C38	196D225X0035JAI	1.000	EA	4					
48	06	4280053	CAP EPOX-DIP 4.7/35V 20% C5	196D475X9035JAI	1.000	EA	4					
49	06	4280137	CAP EPOX-DIP 47/20V C3,C4,C6,C39	196D476X0020PE4	4.000	EA	4					

PRINT PHANTOM ITEMS
PRINT COMPONENTS
PRINT PHANTOM/COMPONENT COMMENTS

PARENT ITEM	CROSS REF ITEM	DESCRIPTION	BATCH QTY	ITEM TYPE	LOW LEVEL
9205006		SUBASSY,NEUTER,MTRG/STAT BD ENGR DRAW 20D2818-05 R	1	1 UNIT MEAS EA	05 PLANNER 443

BOM ITEM	LL CD	COMPONENT & CROSS REF.	DESCRIPTION & COMMENT	ENGINEERING DRAWING NUMBER	QUANTITY PER	UM	ITEM TYP	OPT NBR	FIRST OP SEQ	LT ADJ	EFFECTIVE DATES FROM	TO
50	06	4310280	CAP .001 100V C7,C8	C315C102MIR5CA	2.000	EA	4					
51	06	3600145	DIO 1N4154 25V 4NS SI DO35 CR10,CR11,CR12,CR13,CR14,CR15,CR16	1N4154	7.000	EA	4					
52	06	3390614	LED GRN 7-12d20 DIFFUSED 750EG CR1,CR2,CR3,CR4,CR5,CR6,CR7,CR8,CR22,CR23,CR24	HLMP-3507	11.000	EA	4					
53	06	3390598	LED DUAL CR17,CR18	521-9177	2.000	EA	4					
54	06	3390580	LED DUAL (90) CR9	550-3006	1.000	EA	4					
55	06	3390606	LED HOUSE P-C-LITE CR1,CR2,CR3,CR4,CR5,CR6,CR7,CR8,CR17,CR18,CR22, CR23,CR24	PCR 740 CTP	13.000	EA	4					
56	06	3190758	SW,DPDT,(ON)-NONE-(ON) SW1	0601-210	1.000	EA	4					
60	06	4020467	FERROX CUBE 500 OHM L1,L2,L3	VK200 10/38	3.000	EA	4					
62	06	3090347	CONN 4 PIN J1	87233-4	1.000	EA	4					
63	06	3090222	CONN EDGE 12PIN J2	1-87233-2	1.000	EA	4					
64	06	3090255	CONN 18 GOLD PIN J3	1-87233-8	1.000	EA	4					
65	06	3290152	TEST JACK WHITE R ANGLE TP1	430-101	1.000	EA	4					
66	06	1290071	STRIP,BSHG/GROM,.056IN,12.75LI	GS-NY052NA	.400	EA	4					
67	06	4410221	RES 680 OHM 1/4W 10% R37,R94,R96	RC07GF681K	3.000	EA	4					

TRANSMITTER CONTROL

Schematic 91D7285
Parts List 20C2834

The Transmitter Control board is divided into three main functional sections:

1. Radiate control logic

2. Final power amplifier (PA) current signal conditioner

3. Metering buffer amplifiers

Radiate Control Logic

The transmitter radiate control logic consists of Q1, U1 and their associated circuitry. This circuit will allow the transmitter to radiate when the following conditions are simultaneously met:

1. The front panel RADIATE/STANDBY switch is in the RADIATE position. Or the front panel RADIATE/STANDBY switch is in the STANDBY position and pin D of the back panel remote connector (A10-J1) is at ground potential. Either condition will appear as a ground potential on J1 pin 18 on the Transmitter Control board.

2. The AFC lock signal from the FMO Synthesizer module is greater than +2 V. This will appear as +2 V or more on J1 pin 17 on the Transmitter Control board.

3. Pin K of the back panel remote connector (A10-J1) is floating (not connected to ground). This will appear as +5V on J3 pin 11 on the Transmitter Control board.

When all of the above input conditions occur, the output of U1 will go from +0.4 V to +5 V. This signal appears on J1 pin 13. The signal is sent to the +12.5 V power supply, enabling it to supply power to the intermediate power

amplifier (IPA) and RF amplifier (RFA) and thus allowing the transmitter to radiate. The output from U1 also appears on J1 pin 12 and is used to control the front panel RADIATE status indicator.

PA Current Signal Conditioner

Differential amplifier U4 and associated circuitry condition and amplify the PA current sample to give a front panel meter indication of final power amplifier current. The voltage drop appearing across PA current sampling resistor R705 (in the RF Amplifier module) is presented to the Transmitter Control board on J2 pins 3 and 4. The voltage bewteen TP2 and TP3, as measured with a floating voltmeter, will be 0.1 V for each Ampere of current drawn by the final PA transistor. This voltage contains a +12.5 V common mode component which is removed by the differential amplifier. The differential component is amplified and sent to the Metering and Status module from J1 pin 11.

Metering Buffer Amplifiers

The foward power sample from the RF Amplifier enters the Transmitter Control board on J2 pin 2 and is amplified by the first section of U2. The output of U2 pin 7 is fed to J1 pin 10 for front panel meter display. This output also drives two buffer amplifiers (the second section of U2 and the first section of U3) for remote metering and hot standby purposes. These outputs appear on J3 pins 7 and 12.

The second section of U3 is used to buffer the FMO Synthesizer AFC signal for a remote meter. The input to this amplifier is from J1 pin 8, and the amplifier output is sent to J3 pin 4.

The reflected power sample from the RF Amplifier enters this module on J2 pin 1 and is amplified by the second section of U4. The output is sent to J1 pin 9 for front panel meter display.

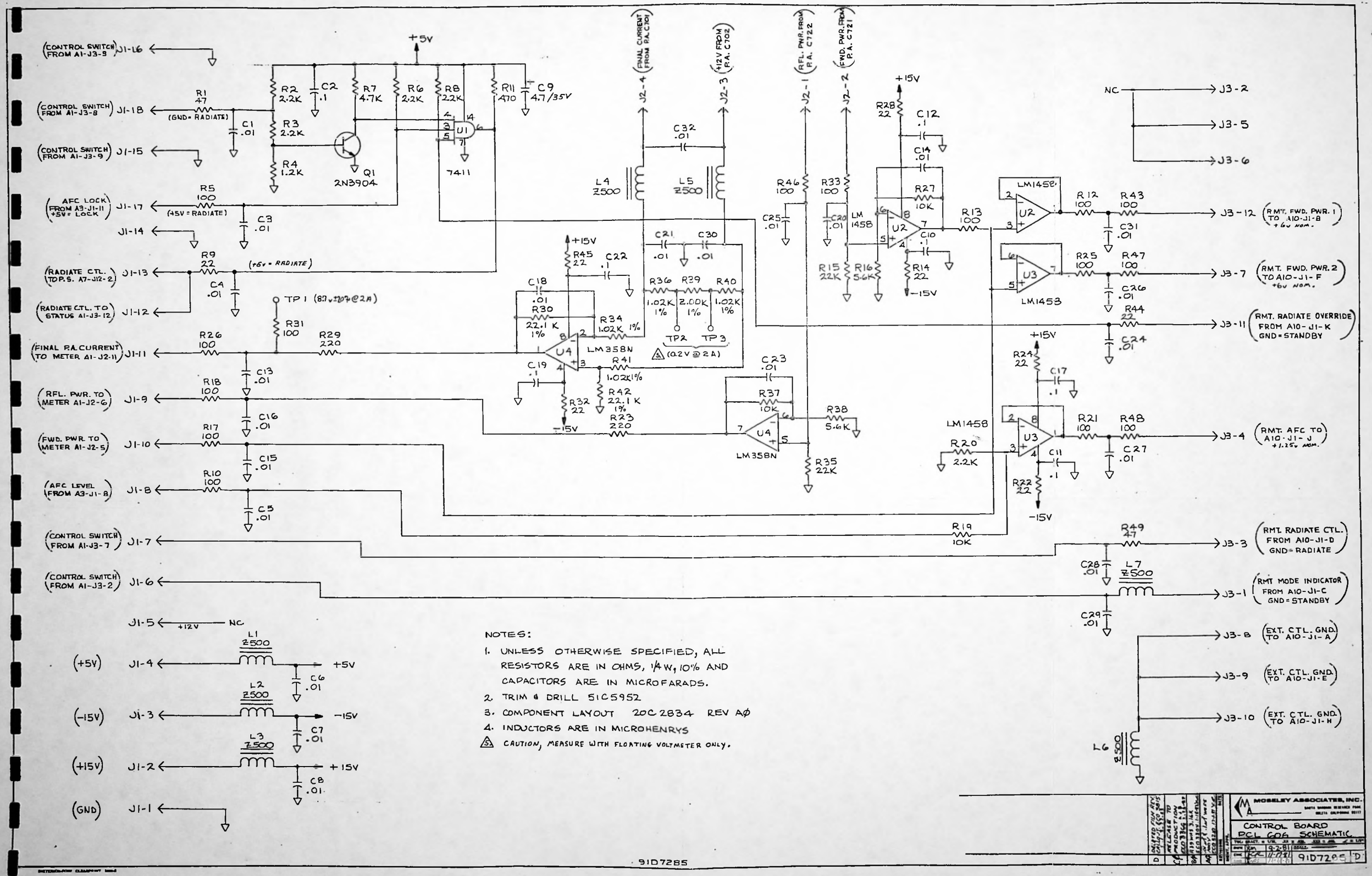

NOTES:

1. UNLESS OTHERWISE SPECIFIED, ALL RESISTORS ARE IN OHMS, 1/4 W, 10% AND CAPACITORS ARE IN MICROFARADS.
2. TRIM & DRILL 51C5952
3. COMPONENT LAYOUT 20C2834 REV AØ
4. INDUCTORS ARE IN MICROHENRYS

⚠ CAUTION, MEASURE WITH FLOATING VOLTMETER ONLY.

9ID7285

QTY	DESCRIPTION	REF. DES.	STOCK NO.	ITEM
				35
				34
				33
3	TEST POINT WHT SMITH 430101	TP1, TP2, TP3	3290152	32
				31
2	RESISTOR 220Ω RC07GF221K	R23, R29	4410163	30
1	RESISTOR 2.00 K, 1/8W, 1%, RN55C2001F	R39	4510293	29
2	RESISTOR 22.1K, 1/8W, 1%, RN55C2212F	R30 R42	4510186	28
4	RESISTOR 1.02K, 1/8W, 1%, RN55C1021F	R34, 36, 40, 41	4510061	27
2	RESISTOR 47Ω AB RC07GF470K	R1, R49	4410080	26
2	RESISTOR 5.6K AB RC07GF562K	R16, R38	4410346	25
2	RESISTOR 22K AB RC07GF223K	R15, R35	4410411	24
3	RESISTOR 10K AB RC07GF103K	R19, R27, R37	4410379	23
1	RESISTOR 4.7K AB RC07GF472K	R7	4410338	22
5	RESISTOR 2.2K AB RC07GF222K	R2, 3, 6, 8, 20	4410288	21
1	RESISTOR 1.2K AB RC07GF122K	R4	4410254	20
1	RESISTOR 470Ω AB RC07GF471K	R11	4410205	19
8	RESISTOR 22Ω AB RC07GF220K	R9, 14, 22, 24, 28, 32, 44, 45	4410049	18
15	RESISTOR 100Ω AB RC07GF101K	R5, 10, 12, 13, 17, 18, 21, 25, 26, 31, 33, 43, 46-48	4410122	17
				16
1	CAPACITOR 4.7μF 196D475X9035JAI	C9	4280053	15
7	CAPACITOR .1μF/50V EMCON 5020-5 50RD104Z	C2, 10-12, 17, 19, 22	4310264	14
24	CAPACITOR .01μF/50V EMCON 5012-5M 50RD1032	C1, 3, 4, 8, 13-16, 18, 20, 21, 23-30, 31, 32	4310272	13
7	INDUCTOR Z-500 VK200 10/3B	L1-L7	4020467	12
				11
1	TRANSISTOR 2N3904 MOTOROLA	Q1	3630456	10
1	I.C. LM 358N NATL	U4	3730983	9
2	I.C. LM-1458N NATL	U2, U3	3730215	8
1	I.C. TI SN7411	U1	3661139	7
3	I.C. SOCKET 8 PIN AMP 640463-1	U2, U3, U4	3250016	6
1	I.C. SOCKET 14PIN AMP 640357-1	U1	3250024	5
1	CONNECTOR 12 PIN AMP 1-87233-2	J3	3090222	4
1	CONNECTOR 4PIN AMP 87233-4	J2	3090347	3
1	CONNECTOR 18 PIN AMP 1-87224-8	J1	3090297	2
1	P.C. BOARD 3×4, MAI5IC5952 REV-10, -20		3473121	1
*	COMPONENT LAYOUT, 20C2834		9204215	*

REVISIONS			
E	ADD NOTES 5,6 ECO 3542 CH. 3JUN82		
D1	RE-RELEASE TO PRODUCTION ECO 3366		
C1	R39 WAS 3.16K ECO 3304		
B1	ITEM 13 WAS C.R.L. ECO 3220		
A1	R28 WAS 22K PCO 3220		
A	REL. FOR PROD. ECO 3211		

MOSELEY ASSOCIATES, INC.
SANTA BARBARA RESEARCH PARK
GOLETA, CALIFORNIA 93017

COMPONENT LAYOUT
TRANSMITTER CONTROL

TOL: FRACT. ± 1/32 .XX ± .030 .XXX ± .010 ∠ ± 1/2°
DWN 11-17-81 SCALE: 2X
CHK 11-17-81
ENG 11-17-81
20C2834 E

TRANSMITTER POWER SUPPLY

Schematic 91C7268
Assembly 21C2765
Parts List 20C2817
20D2836 (partial)

The Transmitter Power Supply module consists of an ac power connector, transformer, rectifiers, capacitive filters, and series pass regulators. The power supply has four output voltages: +15, -15, +5, and +12.5 V. Each is regulated by a series IC regulator. All except the +12.5 V regulator are fixed. The 12.5 V output is adjustable and is factory set to 12.5 V. The 12.5 V output may be reduced to 1.5 V or less by reducing the voltage at pin 12 from its normal level of +5 V to zero. This will occur if the AFC loses lock or if the RADIATE/STANDBY switch is turned to STANDBY.

CAUTION

Failure to ground the third lead of the input power cord may result in hazardous shocks to personnel.

The ac power connector includes fuse F1, an RF filter, and the voltage selector card (PC card). The PC card can be inserted four different ways, which allows the user to select one of the four input voltage ranges listed below:

Nominal Voltage (rms)	Minimum Voltage (rms)	Maximum Voltage (rms)	Line Fuse
100	90	110	2 A
120	108	132	2 A
220	198	242	1 A
240	216	264	1 A

The voltage selected can be observed on the PC card through the window in the ac power connector.

If the voltage selector card needs to be changed to match the available power, do the following: Unplug the power cord, and slide the access window to the left. Pull out the FUSE PULL lever and remove the fuse. With small needle-nose pliers, firmly grasp the PC card and remove it with a straight pull.

Select the operating voltage by orienting the PC card to position the desired voltage number on the top left side. Replace the PC card with the needle-nose pliers.

If the voltage selector card is changed, change the fuse to agree with the above list. Return the FUSE PULL lever to its normal position and insert the fuse into the holders. Slide the window to the right and install the ac power cord.

The voltage selector card changes the primary connections for step-down transformer T1. The transformer has two primary windings which are placed in parallel for 120 Vac operation and in series for 240 Vac operation. One winding is tapped for 100 Vac or 220 Vac operation.

The Power Supply module includes the rectifiers and regulators for the +15V, -15V, and +5 V supplies. The rectifier and regulator for the 12.5 V supply are mounted on the RF Amplifier heat sink. Note: R5 adjusts the output level of the +12.5 V supply; when the transmitter is radiating, this voltage should be between +12.3 and +12.7 volts for proper operation. J1 provides an unregulated +9 V used to power the crystal oven for the first LO crystal.

REF. DES.	-1	-2
R3	22 Ω	33 Ω
R4	180 Ω 5%	240 Ω 5%
R5	2K	5K
C13	7200 Ω / 25V	4500 Ω / 40V
C15 C16	2.2 µf / 35V	2.2 µf / 50V

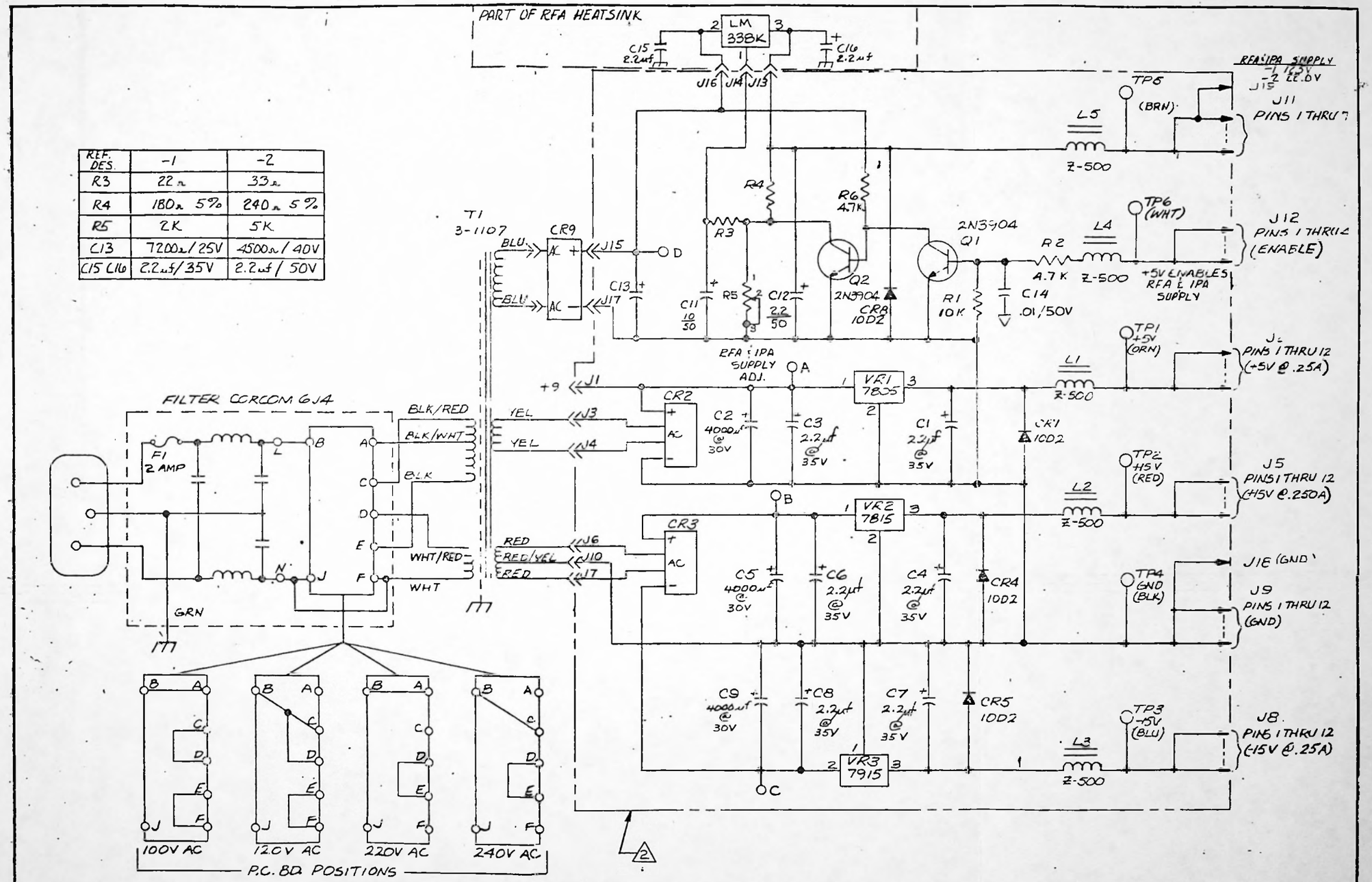

NOTES

1. PC BOARD LAYOUT 51C5933
2. COMPONENT LAYOUT 20C2817
3. ALL RESISTORS ¼W 10%, UNLESS OTHERWISE SPECIFIED.
4. C2, C5, AND C9 MAY BE 2900µF/40V OR 2700µF/40V
5. POINTS A, B, C, AND D ARE DIAGNOSTIC TEST POINTS

USED ON: PCL 606 TRANS

H	ADDED 2
G	RX WAS 10% ECO 41721
F	DELETED PLM REF CALIBRAT. ECO 3815
E	DELETED CR3 ADDED CR2
D	RELEASE TO PRODUCTION ECO
C	CHANGES PER CCO 32 8 JAN 82
B	ADDED CR5, C8 PO 32842
A	ECO 32512
	ECO 32512
	ECO 32512
	PO 32102

MOSELEY ASSOCIATES, INC.
SANTA BARBARA RESEARCH PARK
GOLETA, CALIFORNIA 93017

SCHEM - POWER SUPPLY

DRAWN 9-2-81 SCALE

91C7268 H

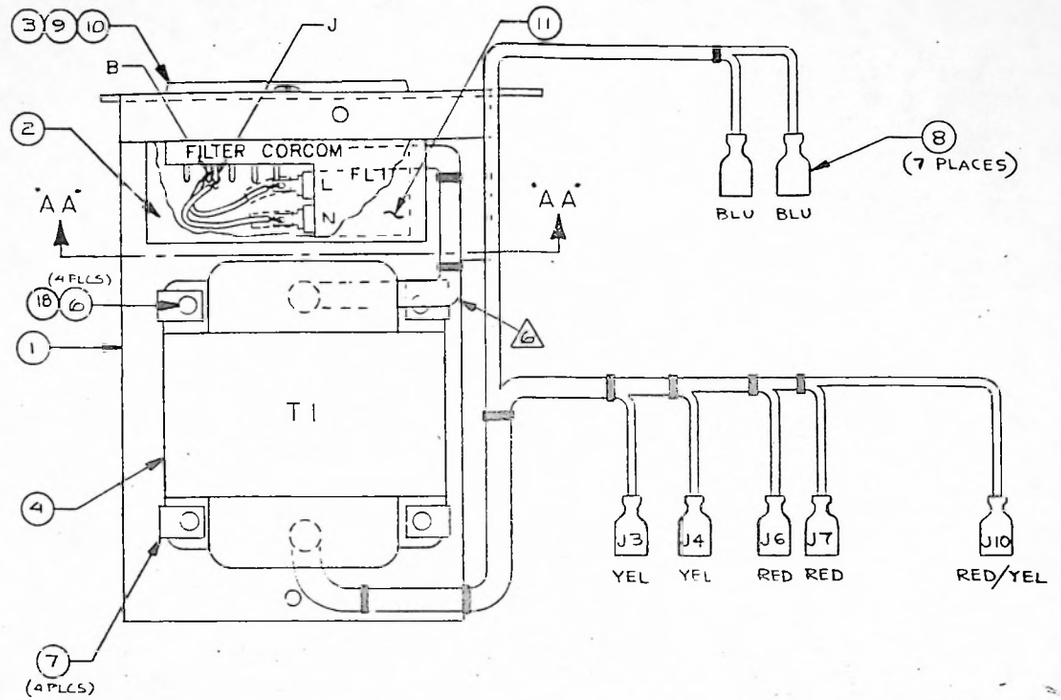

VIEW "AA"

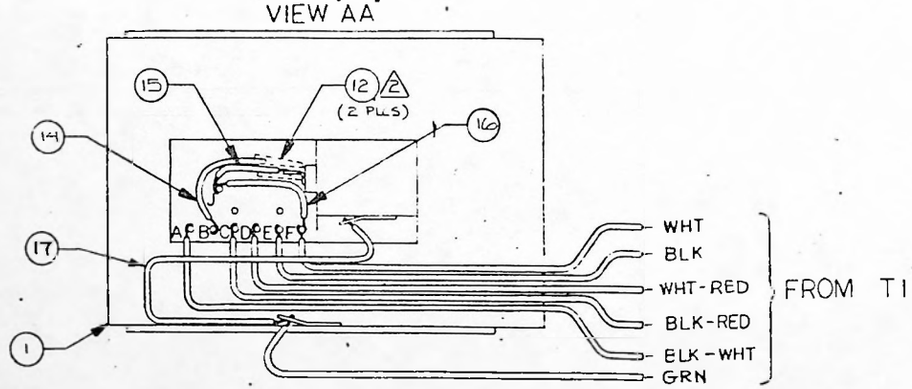

NOTES:

1. REFER TO SHEET 2 FOR DRESSING OF WIRES OF TRANSFORMER 3-1107.
2. INSTALL HEATSHRINK TUBING OVER TERMINALS L AND N (ITEM 3).
3. SCHEMATIC 91C7268.
4. NEXT ASSEMBLY 21D2788
5. PLACE HIGH VOLTAGE LABEL (ITEM 11) ON RIGHT HAND SIDE OF COVER (ITEM 2)
6. ROUTE WIRES FROM T1 TO CORCOM UNIT AS SHOWN.

QTY.	DESCRIPTION		REF. DES.	STOCK NO.	ITEM
4	FLATWASHER, #6	RELIAB		1090604	18
.42	WIRE #18 GA. GRN 5"		FL1	1641604	17
.125	WIRE #18 GA. WHITE 1 1/2"		FL1	1641646	16
.15	WIRE #18 GA. WHITE 1 3/4"		FL1	1641646	15
.15	WIRE #18 GA. BLACK 1 3/4"		FL1	1641554	14
					13
2'	HEATSHRINK TUBING		FL1	1560028	12
1	LABEL, HIGH VOLTAGE AVERY (GRN)		FL1	3430063	11
1	FUSE, BUSS AGC 2A 250V		F1	3270111	10
1	LABEL, CORCOM 1AMP-2 AMP		FL1	3430055	9
7	CONNECTOR, AMP 2-35-0EC4			3110004	8
4	CLIP NUT, SHURLK SL-210-06-2 #6-32			1090109	7
4	SCREW #6-32x3/8 B.H.			1090208	6
1	SCREW #4-40x1/4 B.H.			1050129	5
1	TRANSFORMER, 3-1107		T1	4090445	4
1	FILTER, CORCOM 6J4		FL1	3370046	3
1	COVER, CORCOM	MAI	5B2815	2031896	2
1	CHASSIS	MAI	5C2825	2031912	1
*	TRANSFORMER ASSY TX	MAI	21D2765	9102526	*

REVISIONS			
G	ADDED ITEM 18 ECO 3852 S.J. 4/30/82		
F	CHANGE 12 ITEM 11 WAS ECO 3586		
E	RE-RELEASE TO PRODUCTION ECO 3		
D	ITEM 11 WAS ECO 3372		
C	ITEM 6 WAS 8-32 ECO 3372		
B	ITEM 7 WAS 8-32 ECO 3372		
A	REL. FOR PROD. ECO 3189		

MOSELEY ASSOCIATES, INC.
SANTA BARBARA RESEARCH PARK
GOLETA, CALIFORNIA 93117

PCL 606
TRANSFORMER ASSY TX

TOL: FRACT. ± 1/32 .XX ± .030 .XXX ± .010 ∠ ± 1/2°
DWN A. C. 5-5-81 SCALE FULL
CHK 11-4-81
ENG 11-5-81
21C2765 G

SHEET 1 OF 2.

21C2765

DIETERICH POST CLEARPRINT 1076 B

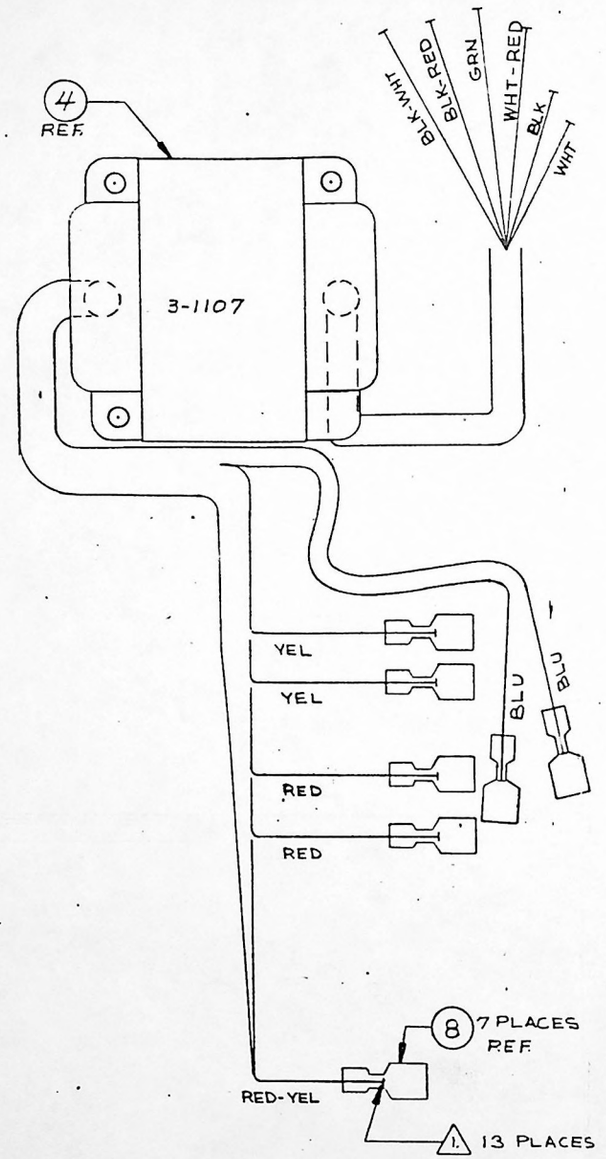

NOTES:

1. TRIM ALL WIRE TO INDICATED MARK: —| 13 PLACES

SHEET 2 OF 2.

G SEE SHT. ECO 3852 S.J. 4/20/83

F SEE SHEET 1 ECO 2650 9-24-82

REVISIONS DATE

MOSELEY ASSOCIATES, INC.
SANTA BARBARA RESEARCH PARK
GOLETA, CALIFORNIA 93117

DRESSING OF TRANSFORMER WIRES PCL-606

TOL. FRACT. ± VEL. .XX ± .XX .XXX ± .XXX ANGLES ±1/2°

DRWN LAW 9SEP82 SCALE FULL

CHK 21C2765 G

21C2765

PRINT PHANTOM ITEMS
PRINT COMPONENTS
PRINT PHANTOM/COMPONENT COMMENTS

PARENT ITEM 9203597 | CROSS REF ITEM | DESCRIPTION POWER SUPPLY PCL-606 XMTR ENGR DRAW 20C2817-1 U | BATCH QTY 1 | ITEM TYPE 1 UNIT MEAS EA | LOW LEVEL 04 PLANNER 440

BOM ITEM	LL CD	COMPONENT & CROSS REF.	DESCRIPTION & COMMENT	ENGINEERING DRAWING NUMBER	QUANTITY PER	UM	ITEM TYP	OPT NBR	FIRST OP SEQ	LT ADJ	EFFECTIVE DATES FROM	TO
2	05	3472743	PCB POWER SUPPLY TR S PCL-606	51C5933 F	1.000	EA	9					
3	05	4270047	CAP PWR LYTIC 4000/30V C2,C5,C9	36DX402G030AA2A	3.000	EA	4					
4	05	4350682	CAP 7200/25V C13	LM7200-25	1.000	EA	4					
5	06	4280046	CAP EPOX-DIP 2.2/35V 20% C1,C3,C4,C6,C7,C8	1960225X0035JAI	6.000	EA	4					
6	05	4280244	CAP ULTRA-DIP 10/50V C11	T368C106M050AS	1.000	EA	4					
7	05	4310132	CAP DISC .01/50V C14	UK-50-103	1.000	EA	4					
8	05	4280251	CAP ULTRA-DIP 2.2/50V C12	T368B225M050AS	1.000	EA	4					
9	06	4410379	RES 10K OHM 1/4W 10% R1	RC07GF103K	1.000	EA	4					
10	05	4630745	POT CER PC PIN 2K OHM .5W 25T R5	64W202	1.000	EA	4					
11	05	4460820	RES 180 OHM 1/4W 5% R4	RC07GF181J	1.000	EA	4					
12	06	4410338	RES 4.7K OHM 1/4W 10% R2,R6	RC07GF472K	2.000	EA	4					
13	06	4410049	RES 22 OHM 1/4W 10% R3	RC07GF220K	1.000	EA	4					
14	06	3610003	DIO 1002 200V 1A SI D039 CR1,CR4,CR5,CR8	1002	4.000	EA	4					
16	05	3610078	DIO MDA-201 100V BRIDGE 2A CR2,CR3	MDA-201	2.000	EA	4					
18	05	3630456	XT 2N3904 Q1,Q2	2N3904	2.000	EA	4					
19	06	4020467	FERROX CUBE 500 OHM L1,L2,L3,L4,L5	VK200 10/3B	5.000	EA	4					
20	06	3290830	LUG GND J1,J3,J4,J6,J7,J10,J13,J14,J15,J16,J17,J18,J19	836	13.000	EA	4					
21	05	3290020	TEST PT BLK VERT TP4	105-0853-001	1.000	EA	4					
22	06	3290087	TEST PT BLUE VERT TP3	105-0860-001	1.000	EA	4					
23	05	3290046	TEST PT RED VERT TP2	105-0852-001	1.000	EA	4					
24	06	3290111	TEST PT WHITE_VERT TP6	105-0851-001	1.000	EA	4					
25	06	3290053	TEST PT ORANGE VERT TP1	105-0856-001	1.000	EA	4					
26	05	3290038	TEST PT BROWN VERT TP5	105-0858-001	1.000	EA	4					

PRINT PHANTOM ITEMS
PRINT COMPONENTS
PRINT PHANTOM/COMPONENT COMMENTS

PARENT ITEM 9203597 | CROSS REF ITEM | DESCRIPTION POWER SUPPLY PCL-606 XMTR ENGR DRAW 20C2817-1 U | BATCH QTY 1 | ITEM TYPE 1 UNIT MEAS EA | LOW LEVEL 04 PLANNER 440

BOM ITEM	LL CD	COMPONENT & CROSS REF.	DESCRIPTION & COMMENT	ENGINEERING DRAWING NUMBER	QUANTITY PER	ITEM UM	ITEM TYP	OPT NBR	FIRST OP SEQ	LT ADJ	EFFECTIVE DATES FROM	TO
27	05	1290188	SIL PAD VR1,VR2,VR3	7403-09-FR-51	3.000	EA	4					
28	05	2110278	HEATSINK 60348-TT VR1,VR2,VR3	60348-TT	3.000	EA	4					
29	05	3090271	CONN 12PIN GLD-NICKL PLATE J5,J8,J9	1-87224-2	3.000	EA	4					
30	05	1050129	SCR PNHD PHPS 4/40 X 1/4 SST VR1,VR2	BINDER HEAD	2.000	EA	4					
31	05	1050590	NUT HEX 4/40 1/4 FLATS SST VR1,VR2	NUT 4/40	2.000	EA	4					
33	05	3650223	RGLTR UA7915UC 15V 1.5A TO220 VR3	7915UC	1.000	EA	4					
34	05	3650173	RGLTR UA7805UC 05V 1.0A TO220 VR1	UA7805UC	1.000	EA	4					
35	05	3650207	RGLTR UA7815UC 15V 1.5A TO220 VR2	7815UC	1.000	EA	4					
36	05	3090396	CONN 4P PC MOUNT 87244-4 J12	87224-4	1.000	EA	4					
37	05	3090578	CONN STRAIGHT SIN ROW 8 PIN J2,J11	65502-108	2.000	EA	4					
38	05	1090554	NUT HEX 6/32 SM PATT VR3	NUT 6/32 SM	1.000	EA	4					
39	05	1090455	SCR PNH SLTD 6/32 X 1/4 NYL VR3	PAN HEAD	1.000	EA	4					
40	05	1050624	WSHR LK #4 INTL T CD PL VR1,VR2	LOCKWASHER #4	2.000	EA	4					
42	05	1150010	SCR BDRH SLTD 10/32X1/4 C2,C5,C9,C13	BINDER HEAD	8.000	EA	4					
43	05	1150127	WSHR LK #10 INTL T C2,C5,C9,C13	LOCKWASHER #10	8.000	EA	4					

PRINT PHANTOM ITEMS
PRINT COMPONENTS
PRINT PHANTOM/COMPONENT COMMENTS

PARENT ITEM 9204975 | CROSS REF ITEM | DESCRIPTION ASSY POWER SUPPLY 1.5-1.71GHZ ENGR DRAW 20C2817-2 U | BATCH QTY 1 | ITEM TYPE 1 UNIT MEAS EA | LOW LEVEL 03 PLANNER 440

BOM ITEM	LL CD	COMPONENT & CROSS REF.	DESCRIPTION & COMMENT	ENGINEERING DRAWING NUMBER	QUANTITY PER	UM	ITEM TYP	OPT NBR	FIRST OP SEQ	LT ADJ	EFFECTIVE DATES FROM	TO
2	05	3472743	PCB POWER SUPPLY TR S PCL-606	51C5933 F	1.000	EA	9					
3	05	4270047	CAP PWR LYTIC 4000/30V C2,C5,C9	36DX402G030AA2A	3.000	EA	4					
4	04	4270146	CAP PWR LYTIC,4000/40V C13	DCM402U040AA2A	1.000	EA	4					
5	06	4280046	CAP EPOX-DIP 2.2/35V 20% C1,C3,C4,C6,C7,C8	196D225X0035JAI	6.000	EA	4					
6	05	4280244	CAP ULTRA-DIP 10/50V C11	T368C106M050AS	1.000	EA	4					
7	05	4310132	CAP DISC .01/50V C14	UK-50-103	1.000	EA	4					
8	05	4280251	CAP ULTRA-DIP 2.2/50V C12	T368B225M050AS	1.000	EA	4					
9	06	4410379	RES 10K OHM 1/4W 10% R1	RC07GF103K	1.000	EA	4					
10	04	4630877	POT CER PC PIN 5K OHM .5W 25T R5	64W502	1.000	EA	4					
11	04	4460085	RES 240 OHM 1/4W 5% R4	RC07GF241J	1.000	EA	4					
12	06	4410338	RES 4.7K OHM 1/4W 10% R2,R6	RC07GF472K	2.000	EA	4					
13	06	4410064	RES 33 OHM 1/4W 10% R3	RC07GF330K	1.000	EA	4					
14	06	3610003	DIO 1002 200V 1A SI D039 CR1,CR4,CR5,CR8	1002	4.000	EA	4					
16	05	3610078	DIO MDA-201 100V BRIDGE 2A CR2,CR3	MDA-201	2.000	EA	4					
18	05	3630456	XT 2N3904 Q1,Q2	2N3904	2.000	EA	4					
19	06	4020467	FERROX CUBE 500 OHM L1,L2,L3,L4,L5	VK200 10/3B	5.000	EA	4					
20	06	3290830	LUG GND J1,J3,J4,J6,J7,J10,J13,J14,J15,J16,J17,J18,J19	836	13.000	EA	4					
21	05	3290020	TEST PT BLK VERT TP4	105-0853-001	1.000	EA	4					
22	06	3290087	TEST PT BLUE VERT TP3	105-0860-001	1.000	EA	4					
23	05	3290046	TEST PT RED VERT TP2	105-0852-001	1.000	EA	4					
24	06	3290111	TEST PT WHITE VERT TP6	105-0851-001	1.000	EA	4					
25	06	3290053	TEST PT ORANGE VERT TP1	105-0856-001	1.000	EA	4					

PRINT PHANTOM ITEMS
PRINT COMPONENTS
PRINT PHANTOM/COMPONENT COMMENTS

PARENT ITEM	CROSS REF ITEM	DESCRIPTION	BATCH QTY	ITEM TYPE	LOW LEVEL
9204975		ASSY POWER SUPPLY 1.5-1.71GHZ ENGR DRAW 20C2817-2 U	1	1 UNIT MEAS EA	03 PLANNER 440

BOM ITEM	LL CD	COMPONENT & CROSS REF.	DESCRIPTION & COMMENT	ENGINEERING DRAWING NUMBER	QUANTITY PER	UM	ITEM TYP	OPT NBR	FIRST OP SEQ	LT ADJ	EFFECTIVE DATES FROM	TO
26	05	3290038	TEST PT BROWN VERT TP5	105-0858-001	1.000	EA	4					
27	05	1290188	SIL PAD VR1,VR2,VR3	7403-09-FR-51	3.000	EA	4					
28	05	2110278	HEATSINK 60348-TT VR1,VR2,VR3	60348-TT	3.000	EA	4					
29	05	3090271	CONN 12PIN GLD-NICKL PLATE J5,J8,J9	1-87224-2	3.000	EA	4					
30	05	1050129	SCR PNHD PHPS 4/40 X 1/4 SST VR1,VR2	BINDER HEAD	2.000	EA	4					
31	05	1050590	NUT HEX 4/40 1/4 FLATS SST VR1,VR2	NUT 4/40	2.000	EA	4					
33	05	3650223	RGLTR UA7915UC 15V 1.5A TO220 VR3	7915UC	1.000	EA	4					
34	05	3650173	RGLTR UA7805UC 05V 1.0A TO220 VR1	UA7805UC	1.000	EA	4					
35	05	3650207	RGLTR UA7815UC 15V 1.5A TO220 VR2	7815UC	1.000	EA	4					
36	05	3090396	CONN 4P PC MOUNT 87244-4 J12	87224-4	1.000	EA	4					
37	05	3090578	CONN STRAIGHT SIN ROW 8 PIN J2,J11	65502-108	2.000	EA	4					
38	05	1090554	NUT HEX 6/32 SM PATT VR3	NUT 6/32 SM	1.000	EA	4					
39	05	1090455	SCR PNH SLTD 6/32 X 1/4 NYL VR3	PAN HEAD	1.000	EA	4					
40	05	1050624	WSHR LK #4 INTL T CD PL VR1,VR2	LOCKWASHER #4	2.000	EA	4					
42	05	1150010	SCR BDRH SLTD 10/32X1/4 C2,C5,C9,C13	BINDER HEAD	8.000	EA	4					
43	05	1150127	WSHR LK #10 INTL T C2,C5,C9,C13	LOCKWASHER #10	8.000	EA	4					

PRINT PHANTOM ITEMS
PRINT COMPONENTS
PRINT PHANTOM/COMPONENT COMMENTS

PARENT ITEM	CROSS REF ITEM	DESCRIPTION	BATCH QTY	ITEM TYPE	LOW LEVEL
9301334		RFA 950MHZ PCL-606 ENGR DRAW 2002836 U	1	1 UNIT MEAS EA	03 PLANNER 440

BOM ITEM	LL CD	COMPONENT & CROSS REF.	DESCRIPTION & COMMENT	ENGINEERING DRAWING NUMBER		QUANTITY PER	UM	ITEM TYP	OPT NBR	FIRST OP SEQ	LT ADJ	EFFECTIVE DATES FROM	TO
1	04	2090199	ENCL COVER 950 MHZ PA	05C2510-2	G	1.000	EA	2					
2	04	2110294	HEATSINK 950MHZ PWR AMP PCL606	05C2829	D1	1.000	EA	2					
3	04	3470267	PCB 950MHZ PWR AMP XMTR	51A5750	B1	1.000	EA	9					
4	04	4010880	COIL AIR 3T 22BUS 1/4 L703,L704,L706,L708,L709,L712	3-2047	A	6.000	EA	1					
5	04	2091254	ENCL BASE 950 MHZ PA PCL-606	05C2510-1	G	1.000	EA	2					
6	04	4020368	FERROX-CUBE 850 OHM L702,L705,L707,L710,L717	VK 200 20/4B		5.000	EA	4					
7	04	4010567	COIL AIR 6T 22BUS 7/32LH L711	3-2022	B0	1.000	EA	1					
8	05	4460028	RES 18 OHM 1/4W 5% R710	RC07GF180J		1.000	EA	4					
9	04	4590022	RES .16 OHM 2W 5% R705	BWH .16 2W 5%		1.000	EA	4					
10	05	4590063	RES 1 OHM 2W 5% R702,R703	BWH 1 2W 5%		2.000	EA	4					
11	04	4490017	RES 220 OHM 2W 5% R701	RC42GF221J		1.000	EA	4					
12	04	4460036	RES 51 OHM 1/4W 5% R707,R708	RC07GF510J		2.000	EA	4					
13	06	4410247	RES 1K OHM 1/4W 10% R706,R709	RC07GF102K		2.000	EA	4					
14	04	3290582	TERM	1300T 4.5		1.000	EA	4					
16	04	4370003	CAP PC MT VAR 5.4-1.3PF C712,C715,C717,C724,C728	187-0103-005		5.000	EA	4					
17	04	4370284	CAP 2-5PF C726	278-0105-005		1.000	EA	4					
18	05	4350401	CAP CHIP 100 PF C708	1008101JP500X		1.000	EA	4					
19	04	4350146	CAP CHIP 33PF 5% P80 C709	C17AH330J500PS		1.000	EA	4					
20	04	4350161	CAP .01UF CHIP C703,C705,C710,C714,C716,C719,C720	W1008F103MP		7.000	EA	4					
21	06	4280079	CAP EPOX-DIP 10/25V C704,C713,C727	1960106X0025KAI		3.000	EA	4					
23	04	4350542	CAP CHIP 2.7 PF C730	1008R7CP500X		1.000	EA	4					
26	04	4370276	CAP CER VAR 1-3PF C729	MC50A1H030		1.000	EA	4					
28	05	4350591	CAP CHIP 10 PF C731	1008100JP500X		1.000	EA	4					

PRINT PHANTOM ITEMS
PRINT COMPONENTS
PRINT PHANTOM/COMPONENT COMMENTS

PARENT ITEM	CROSS REF ITEM	DESCRIPTION	BATCH QTY	ITEM TYPE	LOW LEVEL
9301334		RFA 950MHZ PCL-606 ENGR DRAW 2002836 U	1	1 UNIT MEAS EA	03 PLANNER 440

BOM ITEM	LL CD	COMPONENT & CROSS REF.	DESCRIPTION & COMMENT	ENGINEERING DRAWING NUMBER	QUANTITY PER	UM	ITEM TYP	OPT NBR	FIRST OP SEQ	LT ADJ	EFFECTIVE DATES FROM	TO
29	04	3610045	DIO 5082-2835 FAST CR701,CR702	5082-2835	2.000	EA	4					
30	04	3610284	DIO,BRIDGE, 100V/25A CR101	MDA2501	1.000	EA	4					
31	04	3640117	XT 26064 3.0W960M15V0.5A Q702	26064	1.000	EA	4					
32	04	3640109	XT NPD1-12B 5.8W866M036V.25A Q701	D1-12B	1.000	EA	4					
33	04	3640133	XT NPDM5-12B 29W 036V02A Q703	DM5-12B	1.000	EA	4					
34	04	3640364	XT,RF PWR,10W,806-960 MHZ Q704	26057	1.000	EA	4					
35	04	3650363	RGLTR LM338K VARV 5.0A TO3 VR1	LM338-K-STEEL	1.000	EA	4					
36	04	1250190	COVER INSULATION TO-3	A22-2003	1.000	EA	4					
37	04	3030178	CONN TYPE N RCPT J702	UG-58 A/U	1.000	EA	4					
38	06	3030400	CONN RF, LT-0219-000 J701	LT-0219-000	1.000	EA	4					
39	04	3250214	SKT XSTR/LAM	LST2202-2	1.000	EA	4					
40	04	4010625	COIL AIR L713,L714,L715	3-2028 N/C	3.000	EA	1					
41	04	1290162	SIL PAD VR1	7403-09-FR-05	1.000	EA	4					
42	04	1090638	BSHG MS-10 NYL #6 VR1	851547F002	2.000	EA	4					
43	04	1130301	WSHR LK #8 EXT T SST	LOCKWASHER #8	2.000	EA	4					
44	05	1130277	NUT HEX 8/32 1/4 FLATS SST	NUT 8/32 SM	2.000	EA	4					
45	05	1641927	W BUSS 22GA	298	.080	FT	4					
46	05	1050103	SCR PNDH PHPS 4/40 X 3/16 SS	BINDER HEAD	2.000	EA	4					
47	05	1050145	SCR PNHD PHPS 4/40 X 5/16 SS	BINDER HEAD	8.000	EA	4					
48	04	1050202	SCR PNHD PHPS 4/40 X 9/16 SS	BINDER HEAD	4.000	EA	4					
49	06	1050582	NUT HEX 4/40 SM PATT	NUT 4/40	4.000	EA	4					
50	05	1050632	WSHR LK #4 SR CD PL	LOCKWASHER #4	4.000	EA	4					

PRINT PHANTOM ITEMS
PRINT COMPONENTS
PRINT PHANTOM/COMPONENT COMMENTS

PARENT ITEM 9301334 | CROSS REF ITEM | DESCRIPTION RFA 950MHZ PCL-606 ENGR DRAW 2002836 U | BATCH QTY 1 | ITEM TYPE I UNIT MEAS EA | LOW LEVEL 03 PLANNER 440

BOM ITEM	LL CD	COMPONENT & CROSS REF.	DESCRIPTION & COMMENT	ENGINEERING DRAWING NUMBER	QUANTITY PER	UM	ITEM TYP	OPT NBR	FIRST OP SEQ	LT ADJ	EFFECTIVE DATES FROM	TO
51	04	1090471	SCR PNHD PHPS #6 X 1/2	PAN HEAD-SH MET	2.000	EA	4					
52	04	1560390	TAPE COPPER 1	1194	5.000	IN	4					
53	04	2202000	CA ASSY SMB/RT SMB/RT 16"	2481074-2 A0	1.000	EA	9					
55	06	1641893	W BUSS 16GA	295	1.000	FT	4					
56	05	1641257	W STRD 26GA WHITE-YELLOW	BU-734-26#94	.080	FT	4					
57	05	1641240	W STRD 26GA WHITE-ORANGE	BU-734-26#93	.080	FT	4					
58	05	1641232	W STRD 26GA WHITE-RED	BU-734-26#92	.080	FT	4					
59	05	1641224	W STRD 26GA WHITE-BROWN	BU-734-26#91	.080	FT	4					
60	05	1560242	TBG TEFLON 24AWG NAT	TFT200-24	.250	FT	4					
61	06	4280046	CAP EPOX-DIP 2.2/35V 20% C15,C16	196D225X0035JAI	2.000	EA	4					
62	04	2350619	HARN ASSY 950 AMP PCL-606 XMTR	29C1051 F	1.000	EA	1					
63	05	1130129	SCR PNHD PHPS 8/32 X 3/4 SST	BINDER HEAD	1.000	EA	4					
64	05	1130319	WSHR LK #8 SR SST	LOCKWASHER #8	1.000	EA	4					
65	05	1130335	WSHR FL #8 SST	AN960-C8	1.000	EA	4					

PRESELECTOR FILTER

Schematic (N/A)
Parts List 20C2826

The signal received the antenna is passed to a bandpass filter, the preselector filter. This filter is tuned to the STL band at 940 to 960 MHz. Signals out of band are rejected by at least 70 dB.

The preselector filter is a five-element, interdigital bandpass filter with a maximum insertion loss of 1.5 dB. The ripple bandwidth is 20 MHz centered on 950 MHz. The filter prototype is a five-element Chebyscheff, 0.1 dB ripple, low-pass filter.

PRINT PHANTOM ITEMS
PRINT COMPONENTS
PRINT PHANTOM/COMPONENT COMMENTS

PARENT ITEM 9301250 CROSS REF ITEM DESCRIPTION 950 PRESEL SUBASSY PCL-606 ENGR DRAW 20C2826 E BATCH QTY 1 ITEM TYPE 1 UNIT MEAS EA LOW LEVEL 04 PLANNER 440

BOM ITEM	LL CD	COMPONENT & CROSS REF.	DESCRIPTION & COMMENT	ENGINEERING DRAWING NUMBER		QUANTITY PER	UM	ITEM TYP	OPT NBR	FIRST OP SEQ	LT ADJ	EFFECTIVE DATES FROM	TO
1	05	2031789	ENCL BACK PRESECTOR PCL-606	0582782	D	1.000	EA	2					
2	05	2010874	ENCL FRONT PRESELECTOR PCL-606	0582781	C	1.000	EA	2					
3	05	2031797	ENCL SIDE PRESEECTOR PCL-606	0582783	C	2.000	EA	2					
4	05	2090819	COVER PRESELECTOR PCL-606	0582780	B0	2.000	EA	2					
5	05	2062461	ROD PRESELECTOR PCL-606	05A2794	B0	3.000	EA	2					
6	05	4350377	CAPACITIVE TUNING ELEMENT	6927-0SL		5.000	EA	4					
7	06	3030400	CONN RF, 17-0219-000	17-0219-000		2.000	EA	4					
8	06	1641919	W BOSS 206A	297		.125	FT	4					
9	05	1050129	SCR PNHD PHPS 4/40 X 1/4 SST	PAN HEAD		23.000	EA	4					
10	05	1050152	SCR PNHD PHPS 4/40 X 3/8 SST	BINDER HEAD		9.000	EA	4					
11	05	2062537	ROD DRILLED PRESELECT PCL-606	05A2816	B0	2.000	EA	2					

PREAMPLIFIER AND FIRST MIXER

Schematic 91D7274
Parts List 20D2827

The Preamplifer and First Mixer module has been designed to provide optimum service in the most hostile RF environments. A PIN diode attenuator, the preamplifier, the first mixer, and the first IF preamplifier have been integrated into the module. The input signal is attenuated and then split by a hybrid coupler, amplified, and recombined. The amplified signal is converted down by a double balanced mixer to the first IF frequency of 70 MHz.

The input signal is applied to a PIN diode attenuator normally set to minimum attenuation. This low-pass (0.5 dB) input attenuator can optionally reduce the input signal at least 15 dB in very high level RF environments.

The signal is split by a 3 dB 90° hybrid coupler. The two outputs are amplified by the preamplifier, which consists of low-noise amplifiers Q3 and Q4. These amplifiers are input matched for best noise figure. They are actively biased by Q2 and Q5 to maintain close control over quiescent conditions.

The amplified outputs are recombined in the second hybrid coupler and then fed through a noise filter to the first mixer (U1). The signal is mixed with the 1020 MHz first LO signal to produce the first IF signal at 70 MHz. The image frequency is reactively terminated by a shunt stub.

The output of the mixer is applied to IF preamplifier Q1, which is also matched for best noise performance. The input charcteristics of this device provide a low VSWR termination of the mixer at the IF frequency. The amplified IF signal is bandpass filtered and impedance matched to the 50 ohm output.

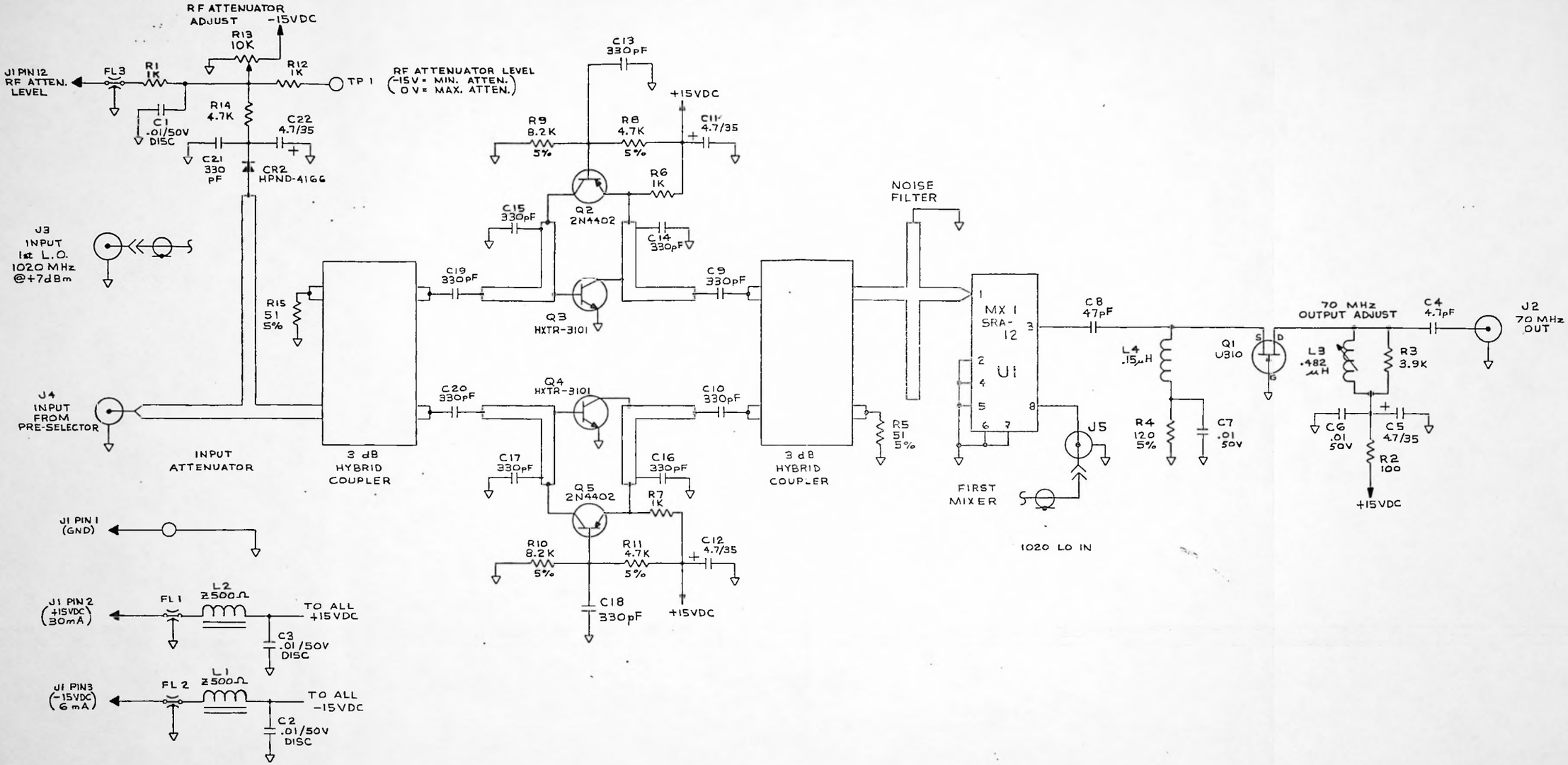

NOTES:

1. UNLESS OTHERWISE SPECIFIED:
   RESISTOR VALUES ARE IN OHMS, 1/4 WATT, 10%
   CAPACITOR VALUES ARE IN MICROFARADS.
2. P.C. BOARD 51D5943.
3. COMPONENT LAYOUT 20D2927

USED ON: PCL-606

MOSELEY ASSOCIATES, INC.
SANTA BARBARA, CALIFORNIA

950
PRE-AMP & MIXER

CAH 16 JUL 81 SCALE NONE

91D7274 H

91D7274

QTY.	DESCRIPTION	REF. DES.	STOCK NO	ITEM
				40
				39
1	FRAME BASE 5C2B67		2090967	38
1	FRAME 5D2B75		2091049	37
				36
				35
2	MODULE COVER 5C2939		2091403	34
1	TEST POINT SMITH 430101 (WHT)	TP 1	3290152	33

QTY.	DESCRIPTION	REF DES	STOCK NO.	ITEM
.25'	TUBING, ALPHA TFT 200-20 #20 TEFLON NATURAL	R1, L1, L2	1560266	32
1	COAX CABLE ASSY 24B1092-1	J3-J5	2202315	31
2	SMB CONN. PCB/BULKHEAD 17-1246-000	J2,4	3090230	30
16	MODULE CLIP 5C2B82		1310093	29
2	SCREW BH - 4-40 x 1/4 SST		1050129	28
1	RESISTOR 3.9 K, 1/4 W, 10% RC07GF393K	R3	4410320	27
1	RESISTOR 100Ω, 1/4 W, 10% RC07GF101K	R2	4410122	26
1	RESISTOR 120Ω, 1/4 W, 5% RC07GF121J	R4	4460655	25
3	RESISTOR 4.7K, 1/4 W, 5% RC07GF472J	R8, R11, R14	4460242	24
2	RESISTOR 8.2K, 1/4 W, 5% RC07GF822J	R9, R10	4460291	23
2	RESISTOR 51Ω, 1/4 W, 5% RC07GF510J	R5, R15	4460036	22
4	RESISTOR 1K 1/4 W, 10% RC07GF102K	R1,6,7,12	4410247	21
2	WASHER, SST. .016THK, SEASTROM 5710-35-16		1130491	20
1	POT 10K BOURNES 3006 P-1-103	R13	4630299	19
2	CAPACITOR .01μF/50V EMCON 50B103M 50ADJ103K	C6, C7	4310272	18
1	CAPACITOR 47pF DM-15-470J MICA DIP	C8	4210183	17
4	CAPACITOR 47/35V 20% SPRAGUE	C5,11,12,22	4280053	16

QTY.	DESCRIPTION	REF. DES.	STOCK NO	ITEM
3	CAPACITOR .01μF/50V CRL UK-50-103	C1,C2,C3	4310132	15
11	CAPACITOR 330pF ATC 100B331JP500	C9,10,13-21	4350526	14
1	CAPACITOR 4.7pF CRL DTZ-4R7 NPO CER	C4	4300034	13
2	INDUCTOR Z-500Ω FERROX CUBE VK200	L1, L2	4020467	12
1	INDUCTOR .15μH MINI RED LNX/DU MR-0.15	L4	4020509	11
1	INDUCTOR ADJ .482μH UNICOIL SERIES 116 TYPE "E" GRAY #19 TYPE	L3	4042065	10
3	FEED THRU FILTER, AMP 859657-1	FL1-FL3	3291069	9
1	DIODE HPND-4166 HEWLETT/PACKARD	CR2	3610235	8
1	TRANSISTOR U310 SILICONIX F.E.T.	Q1	3640307	7
2	TRANSISTOR, HXTR-3101 H/P	Q3, Q4	3640281	6
2	TRANSISTOR 2N4402 FAIRCHILD	Q2, Q5	3630225	5
1	CABLE ASSY 24B1084		2300804	4
1	MIXER SRA-12 MINI CIRCUITS	U1	3350188	3
				2
1	P.C. BOARD MAI 51D5943	REV-H, -21	3473055	1
*	950 PRE AMP & MIXER 20D2B27		9301268	*

QTY.	DESCRIPTION	REF. DES.	STOCK NO	ITEM

ITEM 21 WAS ITEM 21 & 22 ITEM 30 WAS ON 3 DELETE ITEM 39. ECO 3899 CH 14 JULY 83

MODIFIED NOTES & ECO 3327 12 JAN 78

CHANGED STOCK NO. & TITLE ECO 3812 4 APR 79

ITEM 34 WAS WAS SEC 8 & 9 ECO 3640 DEC 10, 81

ADD ITEMS 32, MADE ITEM 31 OPTIONAL ECO 3812 4-7-82 RC

REV PROMS ECO 3934 ECO 3932 4-7-82 RC

RE-RELEASE TO PRODUCTION

REV PROMS ECO 4188 ECO 4188 - 5-18-84

REV PROMS ECO 4188 - 5-18-84

REV PROMS ECO 4188 - 5-18-84

REV PROMS

FIRST LOCAL OSCILLATOR AND MULTIPLIER

Schematic 91D7288
Parts List 20D2828

The output LO signal is derived from a crystal-controlled oscillator, which uses an oven-mounted crystal for frequency stability. The signal is buffered and then quadrupled by a pair of active push-push doublers. Filtering is provided between each multiplication to remove unwanted harmonics. The signal is amplified and fed to a step-recovery diode multiplier, and the output is filtered to select the desired harmonic. The signal is then attenuated to control the output impedance and to reduce the power to the level required by the mixer.

On-board power supply regulation eliminates frequency drifts due to line voltage variations.

The output local oscillator signal is derived from crystal-controlled oscillator Q1. This third overtone crystal is temperature stabilized by a 65°C proportionally controlled oven. The output frequency is adjustable by tuning FREQ ADJ L6; this adjustment causes only small output amplitude variations. Oscillator buffer Q2 isolates the oscillator, preventing frequency pulling when adjusting the multipliers.

The output of the buffer is doubled in an active push-push doubler. The single-ended input from the buffer is split into two out-of-phase voltages in T1 and fed to the bases of two transistors of integrated array U1. The output of these two transistors is summed at their collectors. The close matching of the integrated transistors provides suppression of the fundamental signal driving the bases. The fundamental frequency is further suppressed by an interstage bandpass filter consisting of L15, C18 to C21, L11, C24, L12 and C26.

The second doubler consists of Q3 and Q4. The circuit is essentially the same as the first doubler, but a discrete-component design is used because of the higher frequency and power that are required.

The output of the second doubler is amplified by Q5 to the power level (120 mW) required by the diode multiplier. The output of Q5 is tuned by C39 and impedance matched in two stages to the step-recovery diode multiplier by C38, C41, and L17, and then by C43 and L18. The diode self-bias current is determined by R25.

Diode CR4, the step-recovery diode multiplier, converts the input sinusoidal signal to a stream of impulses. These impulses are fed to an unloaded microstrip quarter-wave resonator (L19), which is tuned to the desired output frequency.

C44 provides a dc block and coupling to the 50 ohm input of output filter FL1. The output of the filter is loaded with a 3 dB attenuator, reducing the output power to that required by the first mixer and providing some control over the impedance seen by the filter. The undesired harmonic multiples of 200 MHz removed from the desired frequency are suppressed at least 40 dB. The output power is between +5 and +12 dBm.

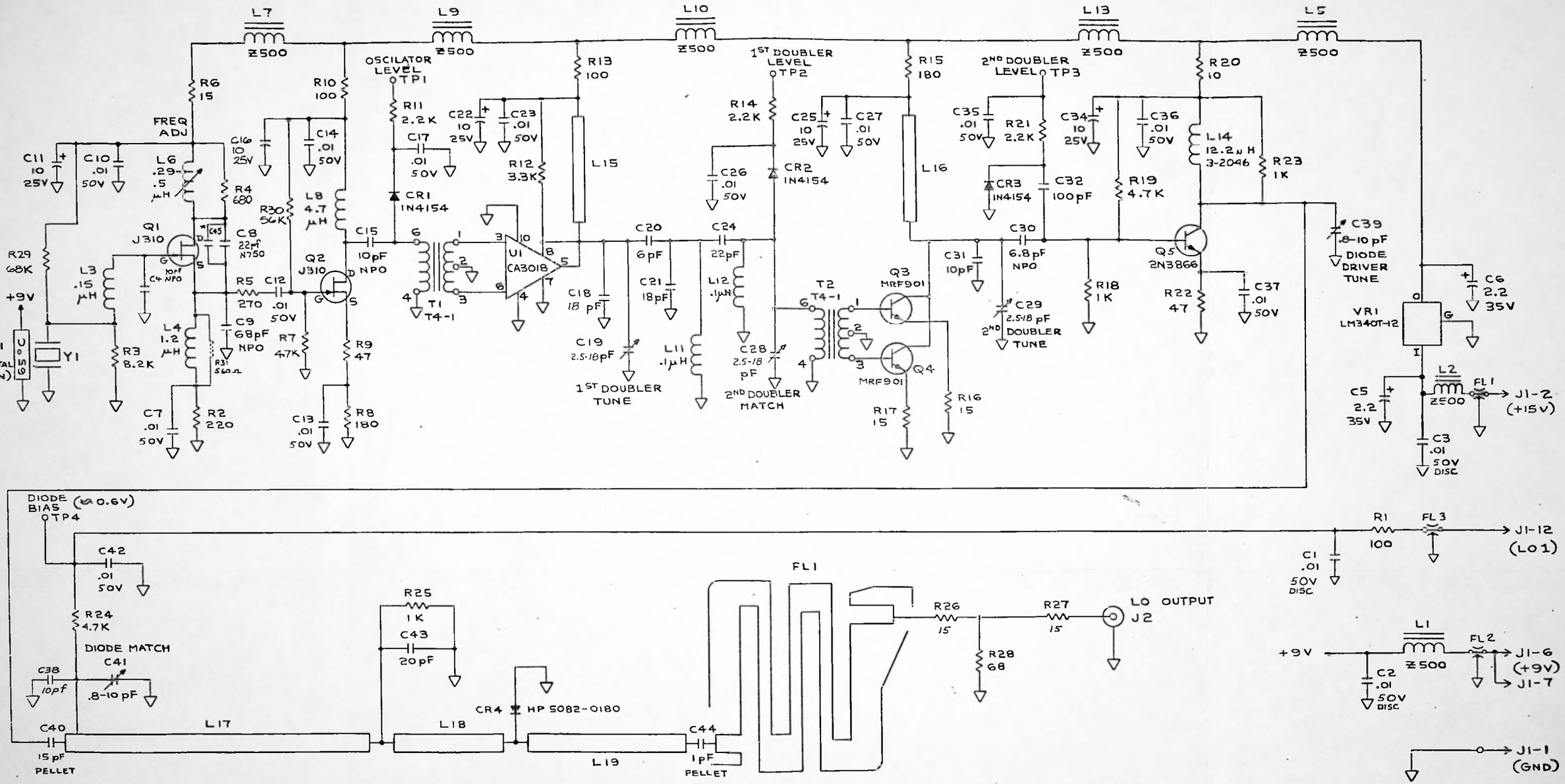

X5 MULTIPLIER

NOTES:

1. UNLESS OTHERWISE SPECIFIED:
   RESISTORS ARE IN OHMS, 1/4 W, 10%
   CAPACITORS ARE IN MICROFARADS
2. TRIM AND DRILL 51D5944
3. COMPONENT LAYOUT 20D2828
4. L15 THRU L19 AND FL1 ARE FOIL OF THE P C BOARD

3 DWG. NO.	20D2828-1	20D2828-2	20D2828-3	20D2828-4	20D2828-5	20D2828-6
STOCK NO.	9301276	9301524	9301532	9301581	9301599	9301607
1 ST. LO FREQ.	1020 MHZ	1000 MHZ	980 MHZ	1010-1030 MHz	990-1010 MHz	980-990 MHz
C45	2.2pf NPO	4.7pf NPO	6.8pf NPO	2.2pf NPO	4.7 pF NPO	6.8 pF NPO

USED ON: PCL-606 XMTR & RCVR

MOSELEY ASSOCIATES, INC.
SANTA BARBARA RESEARCH PARK
GOLETA, CALIFORNIA 93017

SCHEMATIC - 940-960 MHz 1ST LO

91D7288 F

91D7288

PRINT PHANTOM ITEMS
PRINT COMPONENTS
PRINT PHANTOM/COMPONENT COMMENTS

PARENT ITEM 9301276 | CROSS REF ITEM | DESCRIPTION LO 1ST PCL-606 940-960 MHZ | ENGR DRAW 20D2828-1 P | BATCH QTY 1 | EFFEC 9/21/84 | ITEM TYPE 1 | UNIT MEAS EA | LOW LEVEL 03 | PLANNER 440

BOM ITEM	LL CO	COMPONENT & CROSS REF.	DESCRIPTION & COMMENT	ENGINEERING DRAWING NUMBER		QUANTITY PER	UM	ITEM TYP	OPT NBR	FIRST OP SEQ	LT ADJ	EFFECTIVE DATES FROM	TO
1	04	3473063	PCB 1ST LO PCL-606	51D5944	L	1.000	EA	9					
2	04	2091148	MODULE COVER ASSY, CKT 1ST LO	05C2899	A	1.000	EA	1					
3	04	2091015	FRAME, 1ST LO PCL606 RCVR/XMTR	05D2872	D	1.000	EA	2					
4	05	2090967	FRAME BASE, MODULE PCL 606	05C2867	C	1.000	EA	2					
5	04	2091130	MODULE COVER ASSY, COMP 1ST LO	05C2898	A	1.000	EA	1					
6	06	4020467	FERROX CUBE 500 OHM L1,L2,L5,L7,L9,L10,L13	VK200 10/3B		7.000	EA	4					
7	04	4020509	IDCTR MINI-RED .15UH 10% L3	MR.15 10%		1.000	EA	4					
8	04	4020590	IDCTR 1.2 UH 10% L4	9230-22		1.000	EA	4					
9	04	4042057	IDCTR 10.5T BLK TYPE J L6	1171		1.000	EA	4					
10	04	4020608	IDCTR MINI RED 4.7 UH L8	MR 4.7		1.000	EA	4					
11	05	4020640	IDCTR MINI-RED .1 UH 5% L11,L12	MR .10 5%		2.000	EA	4					
12	04	4010872	COIL AIR 2T #18 .30 LH L14	3-2046	B	1.000	EA	1					
13	04	4100038	XFMR MCL T4-1 T1,T2	MCL T4-1		2.000	EA	4					
14	05	3650074	RGLTR LM340T12/7812 VARV1.5A VR1	LM340T-12 /7812		1.000	EA	4					
15	04	3350253	OVEN XTAL PCL 1-16-8-65 HR1	PCL1-16-8-65		1.000	EA	4					
16	04	1230986	STDF 1/4 RND 6-32 X 7/8 ALUM	8160-A-0632		2.000	EA	4					
17	05	3250495	SKT,PIN,.0850DX.200L,GOLD FIN. Y1	450-3286-01-03		2.000	EA	4					
18	04	3291051	FILTER FEED THRU FL1,FL2,FL3	859617-1		3.000	EA	4					
19	05	3090230	CONN MALE RT ANGLE PC SNAP ON J2	17-1246-000		1.000	EA	4					
20	04	2300812	CABLE ASSY 950 1ST LO PCL-606	2481085	A	1.000	EA	1					
21	06	3290152	TEST JACK WHITE R ANGLE TP1,TP2,TP3,TP4	430-101		4.000	EA	4					
22	04	3730041	IC CA3018 XSTR ARRAY U1	CA-3018		1.000	EA	4					
23	04	3640315	XT FET J310 Q1,Q2	J310		2.000	EA	4					

PRINT PHANTOM ITEMS
PRINT COMPONENTS
PRINT PHANTOM/COMPONENT COMMENTS

PARENT ITEM 9301276 | CROSS REF ITEM | DESCRIPTION LO 1ST PCL-606 940-960 MHZ | ENGR DRAW 2002828-1 P | BATCH QTY 1 | EFFEC 9/21/84 | ITEM TYPE 1 | UNIT MEAS EA | LOW LEVEL 03 | PLANNER 440

BOM ITEM	LL CD	COMPONENT & CROSS REF.	DESCRIPTION & COMMENT	ENGINEERING DRAWING NUMBER	QUANTITY PER	ITEM UM	ITEM TYP	OPT NBR	FIRST OP SEQ	LT ADJ	EFFECTIVE DATES FROM	TO
24	04	3640273	XT MRF901 Q3,Q4	MRF 901	2.000	EA	4					
25	04	3630175	XT NP2N3866 05W500M055V.4A Q5	2N3866	1.000	EA	4					
26	05	2110005	HEATSINK TO 5-9 11-12 Q5	NF-204	1.000	EA	4					
27	06	3600145	DIO 1N4154 25V 4NS SI 0035 CR1,CR2,CR3	1N4154	3.000	EA	4					
28	04	3610243	DIO 5082-0180 CR4	HP 5082-0180	1.000	EA	4					
29	06	4310272	CAP .01 50V 103M C7,C10,C12,C13,C14,C17,C23,C26,C27,C35,C36,C37, C42	5018EM50RD103K	13.000	EA	4					
30	06	4280079	CAP EPOX-DIP 10/25V C11,C16,C22,C25,C34	1960106X0025KAI	5.000	EA	4					
31	06	4280046	CAP EPOX-DIP 2.2/35V 20% C5,C6	1960225X0035JAI	2.000	EA	4					
32	04	4300125	CAP N750 DISC 22PF 5% C8	DTN-22	1.000	EA	4					
33	05	4300042	CAP NPO DISC 6.8PF C30	DTZ-6R8	1.000	EA	4					
34	05	1050129	SCR BDRH SLTD 4/40 X 1/4 SST	BINDER HEAD	2.000	EA	4					
35	05	1310093	CLIP PCL-606	05C2882 B	16.000	EA	4					
36	06	4410478	RES 68K OHM 1/4W 10% R29	RC07GF683K	1.000	EA	4					
37	04	4300133	CAP NPO DISC 22PF 5% C24	DTZ-22	1.000	EA	4					
38	05	4300067	CAP NPO DISC 10PF 5% C4,C15,C31	DTZ-10	3.000	EA	4					
39	04	4300182	CAP NPO DISC 68PF 5% C9	DTZ-68	1.000	EA	4					
40	05	4350658	CAP CHIP 15 PF C40	1008150JP500X	1.000	EA	4					
41	05	4210084	CAP MICA DIP 18PF C18	DM-15-180J	1.000	EA	4					
42	04	4200069	CAP MICA DIP 100PF C32	DM-5-101J	1.000	EA	4					
43	04	4350492	CAP MICA DIP 6PF C20	DM5-060D	1.000	EA	4					
44	04	4350484	CAP MICA DIP 18PF C21	DM5-180J	1.000	EA	4					
45	04	4370342	CAP VAR 2.5-18PF C19,C28,C29	GXB18000	3.000	EA	4					

PRINT PHANTOM ITEMS
PRINT COMPONENTS
PRINT PHANTOM/COMPONENT COMMENTS

PARENT ITEM	CROSS REF ITEM	DESCRIPTION	BATCH QTY	ITEM TYPE	LOW LEVEL
9301276		LO 1ST PCL-606 940-960 MHZ	1	1	03
		ENGR DRAW 2002828-1 P	EFFEC 9/21/84	UNIT MEAS EA	PLANNER 440

BOM ITEM	LL CD	COMPONENT & CROSS REF.	DESCRIPTION & COMMENT	ENGINEERING DRAWING NUMBER	QUANTITY PER	UM	ITEM TYP	OPT NBR	FIRST OP SEQ	LT ADJ	EFFECTIVE DATES FROM	TO
46	05	4350393	CAP CHIP 1 PF C44	100B1R0BP500X	1.000	EA	4					
47	04	4240024	CAP GL 10PF C38	UY01-100J	1.000	EA	4					
48	04	4240040	CAP GL 20PF C43	UY01-200J	1.000	EA	4					
49	07	4370201	CAP MIN VAR PC .8-10PC C39,C41	MVM010W	2.000	EA	4					
50	05	4310132	CAP DISC .01/50V C1,C2,C3	UK-50-103	3.000	EA	4					
51	06	4410122	RES 100 OHM 1/4W 10% R1,R10,R13	RC07GF101K	3.000	EA	4					
52	06	4410163	RES 220 OHM 1/4W 10% R2	RC07GF221K	1.000	EA	4					
53	05	4410361	RES 8.2K OHM 1/4W 10% R3	RC07GF822K	1.000	EA	4					
54	04	4410460	RES 56K OHM 1/4W 10% R30	RC07GF563K	1.000	EA	4					
55	05	4410171	RES 270 OHM 1/4W 10% R5	RC07GF271K	1.000	EA	4					
56	05	4410031	RES 15 OHM 1/4W 10% R6,R16,R17,R26,R27	RC07GF150K	5.000	EA	4					
57	06	4410155	RES 180 OHM 1/4W 10% R8,R15	RC07GF181K	2.000	EA	4					
58	05	4410080	RES 47 OHM 1/4W 10% R9,R22	RC07GF470K	2.000	EA	4					
59	06	4410288	RES 2.2K OHM 1/4W 10% R11,R14,R21	RC07GF222K	3.000	EA	4					
60	06	4410304	RES 3.3K OHM 1/4W 10% R12	RC07GF332K	1.000	EA	4					
61	06	4410247	RES 1K OHM 1/4W 10% R18,R23,R25	RC07GF102K	3.000	EA	4					
62	06	4410338	RES 4.7K OHM 1/4W 10% R7,R19,R24	RC07GF472K	3.000	EA	4					
63	05	1090182	SCR BDRH SLTD 6/32 X 1/4 SST VR1	BINDER HEAD	5.000	EA	4					
64	06	4410221	RES 680 OHM 1/4W 10% R4	RC07GF681K	1.000	EA	4					
65	05	4410106	RES 68 OHM 1/4W 10% R28	RC07GF680K	1.000	EA	4					
66	06	4410023	RES 10 OHM 1/4W 10% R20	RC07GF100K	1.000	EA	4					
68	05	1090554	NUT HEX 6/32 SM PATT VR1	NUT 6/32 SM	1.000	EA	4					

PRINT PHANTOM ITEMS
PRINT COMPONENTS
PRINT PHANTOM/COMPONENT COMMENTS

PARENT ITEM	CROSS REF ITEM	DESCRIPTION		BATCH QTY	ITEM TYPE	LOW LEVEL
9301276		LO 1ST PCL-606 940-960 MHZ		1	1	03
		ENGR DRAW 2002828-1	P	EFFEC 9/21/84	UNIT MEAS EA	PLANNER 440

BOM ITEM	LL CD	COMPONENT & CROSS REF.	DESCRIPTION & COMMENT	ENGINEERING DRAWING NUMBER	QUANTITY PER	UM	ITEM TYP	OPT NBR	FIRST OP SEQ	LT ADJ	EFFECTIVE DATES FROM	TO
69	05	1090588	WSHR LK #6 SR SST VR1	LOCKWASHER #6	1.000	EA	4					
70	05	1290188	SIL PAD VR1	7403-09-FR-51	1.000	EA	4					
71	06	4410213	RES 560 OHM 1/4W 10% R31	RC07GF561K	1.000	EA	4					
72	05	1130491	WASHER, SST 5710-35-16	5710-35-16	1.000	EA	4					
73	05	1641927	W BUSS 22GA	298	.300	FT	4					
74	04	3340791	XTAL 51.000 MHZ PCL-606 TX Y1	30A0079-1 D	1.000	EA	4					
75	04	4300018	CAP NPO DISC 2.2PF C45	DTZ-2R2	1.000	EA	4					

PRINT PHANTOM ITEMS
PRINT COMPONENTS
PRINT PHANTOM/COMPONENT COMMENTS

PARENT ITEM 9301524 | CROSS REF ITEM | DESCRIPTION LO 1ST PCL-606 920-940 MHZ | ENGR DRAW 20D2828-2 P | BATCH QTY 1 | EFFEC 9/21/84 | ITEM TYPE 1 | UNIT MEAS EA | LOW LEVEL 03 | PLANNER 440

BOM ITEM	LL CD	COMPONENT & CROSS REF.	DESCRIPTION & COMMENT	ENGINEERING DRAWING NUMBER		QUANTITY PER	UM	ITEM TYP	OPT NBR	FIRST OP SEQ	LT ADJ	EFFECTIVE DATES FROM	TO
1	04	3473063	PCB 1ST LO PCL-606	5105944	L	1.000	EA	9					
2	04	2091148	MODULE COVER ASSY, CKT 1ST LO	05C2899	A	1.000	EA	1					
3	04	2091015	FRAME, 1ST LO PCL606 RCVR/XMTR	05D2872	D	1.000	EA	2					
4	05	2090967	FRAME BASE, MODULE PCL 606	05C2867	C	1.000	EA	2					
5	04	2091130	MODULE COVER ASSY, COMP 1ST LO	05C2898	A	1.000	EA	1					
6	06	4020467	FERROX CUBE 500 OHM L1,L2,L5,L7,L9,L10,L13	VK200 10/3B		7.000	EA	4					
7	04	4020509	IDCTR MINI-RED .15UH 10% L3	MR.15 10%		1.000	EA	4					
8	04	4020590	IDCTR 1.2 UH 10% L4	9230-22		1.000	EA	4					
9	04	4042057	IDCTR 10.5T BLK TYPE J L6	1171		1.000	EA	4					
10	04	4020608	IDCTR MINI RED 4.7 UH L8	MR 4.7		1.000	EA	4					
11	05	4020640	IDCTR MINI-RED .1 UH 5% L11,L12	MR .10 5%		2.000	EA	4					
12	04	4010872	COIL AIR 2T #18 .30 LH L14	3-2046	B	1.000	EA	1					
13	04	4100038	XFMR MCL T4-1 T1,T2	MCL T4-1		2.000	EA	4					
14	05	3650074	RGLTR LM340T12/7812 VARV1.5A VR1	LM340T-12 /7812		1.000	EA	4					
15	04	3350253	OVEN XTAL PCL 1-16-8-65 HR1	PCLI-16-8-65		1.000	EA	4					
16	04	1230986	STDF 1/4 RND 6-32 X 7/8 ALUM	8160-A-0632		2.000	EA	4					
17	05	3250495	SKT,PIN,.0850DX.200L,GOLD FIN. Y1	450-3286-01-03		2.000	EA	4					
18	04	3291051	FILTER FEED THRU FL1,FL2,FL3	859617-1		3.000	EA	4					
19	05	3090230	CONN MALE RT ANGLE PC SNAP ON J2	17-1246-000		1.000	EA	4					
20	04	2300812	CABLE ASSY 950 1ST LO PCL-606	2481085	A	1.000	EA	1					
21	06	3290152	TEST JACK WHITE R ANGLE TP1,TP2,TP3,TP4	430-101		4.000	EA	4					
22	04	3730041	IC CA3018 XSTR ARRAY U1	CA-3018		1.000	EA	4					

PRINT PHANTOM ITEMS
PRINT COMPONENTS
PRINT PHANTOM/COMPONENT COMMENTS

PARENT ITEM	CROSS REF ITEM	DESCRIPTION	BATCH QTY	ITEM TYPE	LOW LEVEL
9301524		LO 1ST PCL-606 920-940 MHZ	1	1	03
		ENGR DRAW 2002828-2 P	EFFEC 9/21/84	UNIT MEAS EA	PLANNER 440

BOM ITEM	LL CD	COMPONENT & CROSS REF.	DESCRIPTION & COMMENT	ENGINEERING DRAWING NUMBER	QUANTITY PER	UM	ITEM TYP	OPT NBR	FIRST OP SEQ	LT ADJ	EFFECTIVE DATES FROM	TO
23	04	3640315	XT FET J310 Q1,Q2	J310	2.000	EA	4					
24	04	3640273	XT MRF901 Q3,Q4	MRF 901	2.000	EA	4					
25	04	3630175	XT NP2N3866 OSW500M055V.4A Q5	2N3866	1.000	EA	4					
26	05	2110005	HEATSINK TO 5-9 11-12 Q5	NF-204	1.000	EA	4					
27	06	3600145	DIO 1N4154 25V 4NS SI DO35 CR1,CR2,CR3	1N4154	3.000	EA	4					
28	04	3610243	DIO 5082-0180 CR4	HP 5082-0180	1.000	EA	4					
29	06	4310272	CAP .01 50V 103M C7,C10,C12,C13,C14,C17,C23,C26,C27,C35,C36,C37, C42	5018EM50RD103K	13.000	EA	4					
30	06	4280079	CAP EPOX-DIP 10/25V C11,C16,C22,C25,C34	196D106X0025KAI	5.000	EA	4					
31	06	4280046	CAP EPOX-DIP 2.2/35V 20% C5,C6	196D225X0035JAI	2.000	EA	4					
32	04	4300125	CAP N750 DISC 22PF 5% C8	DTN-22	1.000	EA	4					
33	05	4300042	CAP NPO DISC 6.8PF C30	DTZ-6R8	1.000	EA	4					
34	05	1050129	SCR BORH SLTD 4/40 X 1/4 SST	BINDER HEAD	2.000	EA	4					
35	05	1310093	CLIP PCL-606	05C2882 B	16.000	EA	4					
36	06	4410478	RES 68K OHM 1/4W 10% R29	RC07GF683K	1.000	EA	4					
37	04	4300133	CAP NPO DISC 22PF 5% C24	DTZ-22	1.000	EA	4					
38	05	4300067	CAP NPO DISC 10PF 5% C4,C15,C31	DTZ-10	3.000	EA	4					
39	04	4300182	CAP NPO DISC 68PF 5% C9	DTZ-68	1.000	EA	4					
40	05	4350658	CAP CHIP 15 PF C40	100B150JP500X	1.000	EA	4					
41	05	4210084	CAP MICA DIP 19PF C18	DM-15-180J	1.000	EA	4					
42	04	4200069	CAP MICA DIP 100PF C32	DM-5-101J	1.000	EA	4					
43	04	4350492	CAP MICA DIP 6PF C20	DM5-060D	1.000	EA	4					
44	04	4350484	CAP MICA DIP 18PF C21	DM5-180J	1.000	EA	4					

PRINT PHANTOM ITEMS
PRINT COMPONENTS
PRINT PHANTOM/COMPONENT COMMENTS

PARENT ITEM	CROSS REF ITEM	DESCRIPTION	BATCH QTY	ITEM TYPE	LOW LEVEL
9301524		LO 1ST PCL-606 920-940 MHZ	1	1	03
		ENGR DRAW 20D2828-2 P	EFFEC 9/21/84	UNIT MEAS EA	PLANNER 440

BOM ITEM	LL CD	COMPONENT & CROSS REF.	DESCRIPTION & COMMENT	ENGINEERING DRAWING NUMBER	QUANTITY PER	UM	ITEM TYP	OPT NBR	FIRST OP SEQ	LT ADJ	EFFECTIVE DATES FROM	TO
45	04	4370342	CAP VAR 2.5-18PF C19,C28,C29	GXB18000	3.000	EA	4					
46	05	4350393	CAP CHIP 1 PF C44	100B1R0BP500X	1.000	EA	4					
47	04	4240024	CAP GL 10PF C38	UY01-100J	1.000	EA	4					
48	04	4240040	CAP GL 20PF C43	UY01-200J	1.000	EA	4					
49	07	4370201	CAP MIN VAR PC .8-10PC C39,C41	MVM010W	2.000	EA	4					
50	05	4310132	CAP DISC .01/50V C1,C2,C3	UK-50-103	3.000	EA	4					
51	06	4410122	RES 100 OHM 1/4W 10% R1,R10,R13	RC07GF101K	3.000	EA	4					
52	06	4410163	RES 220 OHM 1/4W 10% R2	RC07GF221K	1.000	EA	4					
53	05	4410361	RES 8.2K OHM 1/4W 10% R3	RC07GF822K	1.000	EA	4					
54	04	4410460	RES 56K OHM 1/4W 10% R30	RC07GF563K	1.000	EA	4					
55	05	4410171	RES 270 OHM 1/4W 10% R5	RC07GF271K	1.000	EA	4					
56	05	4410031	RES 15 OHM 1/4W 10% R6,R16,R17,R26,R27	RC07GF150K	5.000	EA	4					
57	06	4410155	RES 180 OHM 1/4W 10% R8,R15	RC07GF181K	2.000	EA	4					
58	05	4410080	RES 47 OHM 1/4W 10% R9,R22	RC07GF470K	2.000	EA	4					
59	06	4410288	RES 2.2K OHM 1/4W 10% R11,R14,R21	RC07GF222K	3.000	EA	4					
60	06	4410304	RES 3.3K OHM 1/4W 10% R12	RC07GF332K	1.000	EA	4					
61	06	4410247	RES 1K OHM 1/4W 10% R18,R23,R25	RC07GF102K	3.000	EA	4					
62	06	4410338	RES 4.7K OHM 1/4W 10% R7,R19,R24	RC07GF472K	3.000	EA	4					
63	05	1090182	SCR BORH SLTD 6/32 X 1/4 SST VR1	BINDER HEAD	5.000	EA	4					
64	06	4410221	RES 680 OHM 1/4W 10% R4	RC07GF681K	1.000	EA	4					
65	05	4410106	RES 68 OHM 1/4W 10% R28	RC07GF680K	1.000	EA	4					
66	06	4410023	RES 10 OHM 1/4W 10% R20	RC07GF100K	1.000	EA	4					

PRINT PHANTOM ITEMS
PRINT COMPONENTS
PRINT PHANTOM/COMPONENT COMMENTS

PARENT ITEM 9301524 | CROSS REF ITEM | DESCRIPTION LO 1ST PCL-606 920-940 MHZ ENGR DRAW 2002828-2 P | BATCH QTY 1 EFFEC 9/21/84 | ITEM TYPE 1 UNIT MEAS EA | LOW LEVEL 03 PLANNER 440

BOM ITEM	LL CO	COMPONENT & CROSS REF.	DESCRIPTION & COMMENT	ENGINEERING DRAWING NUMBER	QUANTITY PER	UM	ITEM TYP	OPT NBR	FIRST OP SEQ	LT ADJ	EFFECTIVE DATES FROM	TO
68	05	1090554	NUT HEX 6/32 SM PATT VR1	NUT 6/32 SM	1.000	EA	4					
69	05	1090588	WSHR LK #6 SR SST VR1	LOCKWASHER #6	1.000	EA	4					
70	05	1290188	SIL PAD VR1	7403-09-FR-51	1.000	EA	4					
71	06	4410213	RES 560 OHM 1/4W 10% R31	RC07GF561K	1.000	EA	4					
72	05	1130491	WASHER, SST 5710-35-16	5710-35-16	1.000	EA	4					
73	05	1641927	W BUSS 22GA	298	.300	FT	4					
74	04	3340825	XTAL 50.000 MHZ PCL-606 Y1	30A0079-2 D	1.000	EA	4					
75	05	4300034	CAP NPO DISC 4.7PF C45	DTZ-4R7	1.000	EA	4					

PRINT PHANTOM ITEMS
PRINT COMPONENTS
PRINT PHANTOM/COMPONENT COMMENTS

PARENT ITEM	CROSS REF ITEM	DESCRIPTION		BATCH QTY	ITEM TYPE	LOW LEVEL
9301532		LO 1ST PCL-606 910-920 MHZ		1	1	03
		ENGR DRAW 2002828-3	P	EFFEC 9/21/84	UNIT MEAS EA	PLANNER 440

BOM ITEM	LL CO	COMPONENT & CROSS REF.	DESCRIPTION & COMMENT	ENGINEERING DRAWING NUMBER		QUANTITY PER	UM	ITEM TYP	OPT NBR	FIRST OP SEQ	LT ADJ	EFFECTIVE DATES FROM	TO
1	04	3473063	PCB 1ST LO PCL-606	51D5944	L	1.000	EA	9					
2	04	2091148	MODULE COVER ASSY, CKT 1ST LO	05C2899	A	1.000	EA	1					
3	04	2091015	FRAME, 1ST LO PCL606 RCVR/XMTR	05D2872	D	1.000	EA	2					
4	05	2090967	FRAME BASE, MODULE PCL 606	05C2867	C	1.000	EA	2					
5	04	2091130	MODULE COVER ASSY, COMP 1ST LO	05C2898	A	1.000	EA	1					
6	06	4020467	FERROX CUBE 500 OHM L1,L2,L5,L7,L9,L10,L13	VK200 10/3B		7.000	EA	4					
7	04	4020509	IDCTR MINI-RED .15UH 10% L3	MR.15 10%		1.000	EA	4					
8	04	4020590	IDCTR 1.2 UH 10% L4	9230-22		1.000	EA	4					
9	04	4042057	IDCTR 10.5T BLK TYPE J L6	1171		1.000	EA	4					
10	04	4020608	IDCTR MINI RED 4.7 UH L8	MR 4.7		1.000	EA	4					
11	05	4020640	IDCTR MINI-RED .1 UH 5% L11,L12	MR .10 5%		2.000	EA	4					
12	04	4010872	COIL AIR 2T #18 .30 LH L14	3-2046	B	1.000	EA	1					
13	04	4100038	XFMR MCL T4-1 T1,T2	MCL T4-1		2.000	EA	4					
14	05	3650074	RGLTR LM340T12/7812 VARV1.5A VR1	LM340T-12 /7812		1.000	EA	4					
15	04	3350253	OVEN XTAL PCL 1-16-8-65 HR1	PCL1-16-8-65		1.000	EA	4					
16	04	1230986	STDF 1/4 RND 6-32 X 7/8 ALUM	8160-A-0632		2.000	EA	4					
17	05	3250495	SKT,PIN,.0850DX.200L,GOLD FIN. Y1	450-3286-01-03		2.000	EA	4					
18	04	3291051	FILTER FEED THRU FL1,FL2,FL3	859617-1		3.000	EA	4					
19	05	3090230	CONN MALE RT ANGLE PC SNAP ON J2	17-1246-000		1.000	EA	4					
20	04	2300812	CABLE ASSY 950 1ST LO PCL-606	2481085	A	1.000	EA	1					
21	06	3290152	TEST JACK WHITE R ANGLE TP1,TP2,TP3,TP4	430-101		4.000	EA	4					
22	04	3730041	IC CA3018 XSTR ARRAY U1	CA-3018		1.000	EA	4					

PRINT PHANTOM ITEMS
PRINT COMPONENTS
PRINT PHANTOM/COMPONENT COMMENTS

PARENT ITEM	CROSS REF ITEM	DESCRIPTION		BATCH QTY	ITEM TYPE	LOW LEVEL
9301532		LO 1ST PCL-606 910-920 MHZ		1	1	03
		ENGR DRAW 2002828-3	P	EFFEC 9/21/84	UNIT MEAS EA	PLANNER 440

BOM ITEM	LL CO	COMPONENT & CROSS REF.	DESCRIPTION & COMMENT	ENGINEERING DRAWING NUMBER	QUANTITY PER	UM	ITEM TYP	OPT NBR	FIRST OP SEQ	LT ADJ	EFFECTIVE DATES FROM	TO
23	04	3640315	XT FET J310 Q1,Q2	J310	2.000	EA	4					
24	04	3640273	XT MRF901 Q3,Q4	MRF 901	2.000	EA	4					
25	04	3630175	XT NP2N3866 05W500M055V.4A Q5	2N3866	1.000	EA	4					
26	05	2110005	HEATSINK TO 5-9 11-12 Q5	NF-204	1.000	EA	4					
27	06	3600145	DIO 1N4154 25V 4NS SI 0035 CR1,CR2,CR3	1N4154	3.000	EA	4					
28	04	3610243	DIO 5082-0180 CR4	HP 5082-0180	1.000	EA	4					
29	06	4310272	CAP .01 50V 103M C7,C10,C12,C13,C14,C17,C23,C26,C27,C35,C36,C37, C42	5018EM50RD103K	13.000	EA	4					
30	06	4280079	CAP EPOX-DIP 10/25V C11,C16,C22,C25,C34	1960106X0025KAI	5.000	EA	4					
31	06	4280046	CAP EPOX-DIP 2.2/35V 20% C5,C6	1960225X0035JAI	2.000	EA	4					
32	04	4300125	CAP N750 DISC 22PF 5% C8	DTN-22	1.000	EA	4					
33	05	4300042	CAP NPO DISC 6.8PF C30,C45	DTZ-6R8	2.000	EA	4					
34	05	1050129	SCR BORH SLTD 4/40 X 1/4 SST	BINDER HEAD	2.000	EA	4					
35	05	1310093	CLIP PCL-606	05C2882 B	16.000	EA	4					
36	06	4410478	RES 68K OHM 1/4W 10% R29	RC07GF683K	1.000	EA	4					
37	04	4300133	CAP NPO DISC 22PF 5% C24	DTZ-22	1.000	EA	4					
38	05	4300067	CAP NPO DISC 10PF 5% C4,C15,C31	DTZ-10	3.000	EA	4					
39	04	4300182	CAP NPO DISC 68PF 5% C9	DTZ-68	1.000	EA	4					
40	05	4350658	CAP CHIP 15 PF C40	100B150JP500X	1.000	EA	4					
41	05	4210084	CAP MICA DIP 18PF C18	DM-15-180J	1.000	EA	4					
42	04	4200069	CAP MICA DIP 100PF C32	DM-5-101J	1.000	EA	4					
43	04	4350492	CAP MICA DIP 6PF C20	DM5-060D	1.000	EA	4					
44	04	4350484	CAP MICA DIP 18PF C21	DM5-180J	1.000	EA	4					

PRINT PHANTOM ITEMS
PRINT COMPONENTS
PRINT PHANTOM/COMPONENT COMMENTS

PARENT ITEM 9301532 | CROSS REF ITEM | DESCRIPTION LO 1ST PCL-606 910-920 MHZ ENGR DRAW 2002828-3 P | BATCH QTY 1 EFFEC 9/21/84 | ITEM TYPE 1 UNIT MEAS EA | LOW LEVEL 03 PLANNER 440

BOM ITEM	LL CD	COMPONENT & CROSS REF.	DESCRIPTION & COMMENT	ENGINEERING DRAWING NUMBER	QUANTITY PER	UM	ITEM TYP	OPT NBR	FIRST OP SEQ	LT ADJ	EFFECTIVE DATES FROM	TO
45	04	4370342	CAP VAR 2.5-18PF C19,C28,C29	GXB18000	3.000	EA	4					
46	05	4350393	CAP CHIP 1 PF C44	100B1R0BP500X	1.000	EA	4					
47	04	4240024	CAP GL 10PF C38	UY01-100J	1.000	EA	4					
48	04	4240040	CAP GL 20PF C43	UY01-200J	1.000	EA	4					
49	07	4370201	CAP MIN VAR PC .8-10PC C39,C41	MVM010W	2.000	EA	4					
50	05	4310132	CAP DISC .01/50V C1,C2,C3	UK-50-103	3.000	EA	4					
51	06	4410122	RES 100 OHM 1/4W 10% R1,R10,R13	RC07GF101K	3.000	EA	4					
52	06	4410163	RES 220 OHM 1/4W 10% R2	RC07GF221K	1.000	EA	4					
53	05	4410361	RES 8.2K OHM 1/4W 10% R3	RC07GF822K	1.000	EA	4					
54	04	4410460	RES 56K OHM 1/4W 10% R30	RC07GF563K	1.000	EA	4					
55	05	4410171	RES 270 OHM 1/4W 10% R5	RC07GF271K	1.000	EA	4					
56	05	4410031	RES 15 OHM 1/4W 10% R6,R16,R17,R26,R27	RC07GF150K	5.000	EA	4					
57	06	4410155	RES 180 OHM 1/4W 10% R8,R15	RC07GF181K	2.000	EA	4					
58	05	4410080	RES 47 OHM 1/4W 10% R9,R22	RC07GF470K	2.000	EA	4					
59	06	4410288	RES 2.2K OHM 1/4W 10% R11,R14,R21	RC07GF222K	3.000	EA	4					
60	06	4410304	RES 3.3K OHM 1/4W 10% R12	RC07GF332K	1.000	EA	4					
61	06	4410247	RES 1K OHM 1/4W 10% R18,R23,R25	RC07GF102K	3.000	EA	4					
62	06	4410338	RES 4.7K OHM 1/4W 10% R7,R19,R24	RC07GF472K	3.000	EA	4					
63	05	1090182	SCR BDRH SLTD 6/32 X 1/4 SST VR1	BINDER HEAD	5.000	EA	4					
64	06	4410221	RES 680 OHM 1/4W 10% R4	RC07GF681K	1.000	EA	4					
65	05	4410106	RES 68 OHM 1/4W 10% R28	RC07GF680K	1.000	EA	4					
66	06	4410023	RES 10 OHM 1/4W 10% R20	RC07GF100K	1.000	EA	4					

PRINT PHANTOM ITEMS
PRINT COMPONENTS
PRINT PHANTOM/COMPONENT COMMENTS

PARENT ITEM	CROSS REF ITEM	DESCRIPTION	BATCH QTY	ITEM TYPE	LOW LEVEL
9301532		LO 1ST PCL-606 910-920 MHZ	1	1	03
		ENGR DRAW 2002828-3 P	EFFEC 9/21/84	UNIT MEAS EA	PLANNER 440

BOM ITEM	LL CD	COMPONENT & CROSS REF.	DESCRIPTION & COMMENT	ENGINEERING DRAWING NUMBER	QUANTITY PER	ITEM UM	ITEM TYP	OPT NBR	FIRST OP SEQ	LT ADJ	EFFECTIVE DATES FROM	TO
68	05	1090554	NUT HEX 6/32 SM PATT VR1	NUT 6/32 SM	1.000	EA	4					
69	05	1090588	WSHR LK #6 SR SST VR1	LOCKWASHER #6	1.000	EA	4					
70	05	1290188	SIL PAD VR1	7403-09-FR-51	1.000	EA	4					
71	06	4410213	RES 560 OHM 1/4W 10% R31	RC07GF561K	1.000	EA	4					
72	05	1130491	WASHER, SST 5710-35-16	5710-35-16	1.000	EA	4					
73	05	1641927	W BUSS 22GA	298	.300	FT	4					
74	04	3340833	XTAL 49.000 MHZ PCL-606 TX Y1	30A0079-3 0	1.000	EA	4					

PRINT PHANTOM ITEMS
PRINT COMPONENTS
PRINT PHANTOM/COMPONENT COMMENTS

PARENT ITEM	CROSS REF ITEM	DESCRIPTION	BATCH QTY	ITEM TYPE	LOW LEVEL
9301581		LO 1ST PCL-606 940-960 MHZ RX	1	1	03
		ENGR DRAW 2002828-4 P	EFFEC 9/21/84	UNIT MEAS EA	PLANNER 450

BOM ITEM	LL CD	COMPONENT & CROSS REF.	DESCRIPTION & COMMENT	ENGINEERING DRAWING NUMBER		QUANTITY PER	UM	ITEM TYP	OPT NBR	FIRST OP SEQ	LT ADJ	EFFECTIVE DATES FROM	TO
1	04	3473063	PCB 1ST LO PCL-606	5105944	L	1.000	EA	9					
2	04	2091148	MODULE COVER ASSY, CKT 1ST LO	05C2899	A	1.000	EA	1					
3	04	2091015	FRAME, 1ST LO PCL606 RCVR/XMTR	0502872	D	1.000	EA	2					
4	05	2090967	FRAME BASE, MODULE PCL 606	05C2867	C	1.000	EA	2					
5	04	2091130	MODULE COVER ASSY, COMP 1ST LO	05C2898	A	1.000	EA	1					
6	06	4020467	FERROX CUBE 500 OHM L1,L2,L5,L7,L9,L10,L13	VK200 10/3B		7.000	EA	4					
7	04	4020509	IDCTR MINI-RED .15UH 10% L3	MR.15 10%		1.000	EA	4					
8	04	4020590	IDCTR 1.2 UH 10% L4	9230-22		1.000	EA	4					
9	04	4042057	IDCTR 10.5T BLK TYPE J L6	1171		1.000	EA	4					
10	04	4020608	IDCTR MINI RED 4.7 UH L8	MR 4.7		1.000	EA	4					
11	05	4020640	IDCTR MINI-RED .1 UH 5% L11,L12	MR .10 5%		2.000	EA	4					
12	04	4010872	COIL AIR 2T #18 .30 LH L14	3-2046	B	1.000	EA	1					
13	04	4100038	XFMR MCL T4-1 T1,T2	MCL T4-1		2.000	EA	4					
14	05	3650074	RGLTR LM340T12/7812 VARV1.5A VR1	LM340T-12 /7812		1.000	EA	4					
15	04	3350253	OVEN XTAL PCL 1-16-8-65 HR1	PCL1-16-8-65		1.000	EA	4					
16	04	1230986	STDF 1/4 RND 6-32 X 7/8 ALUM	8160-A-0632		2.000	EA	4					
17	05	3250495	SKT,PIN,.0850DX.200L,GOLD FIN. Y1	450-3286-01-03		2.000	EA	4					
18	04	3291051	FILTER FEED THRU FL1,FL2,FL3	859617-1		3.000	EA	4					
19	05	3090230	CONN MALE RT ANGLE PC SNAP ON J2	17-1246-000		1.000	EA	4					
20	04	2300812	CABLE ASSY 950 1ST LO PCL-606	2481085	A	1.000	EA	1					
21	06	3290152	TEST JACK WHITE R ANGLE TP1,TP2,TP3,TP4	430-101		4.000	EA	4					
22	04	3730041	IC CA3018 XSTR ARRAY U1	CA-3018		1.000	EA	4					

PRINT PHANTOM ITEMS
PRINT COMPONENTS
PRINT PHANTOM/COMPONENT COMMENTS

PARENT ITEM	CROSS REF ITEM	DESCRIPTION	BATCH QTY	ITEM TYPE	LOW LEVEL
9301581		LO 1ST PCL-606 940-960 MHZ RX	1	1	03
		ENGR DRAW 2002828-4 P	EFFEC 9/21/84	UNIT MEAS EA	PLANNER 450

BOM ITEM	LL CD	COMPONENT & CROSS REF.	DESCRIPTION & COMMENT	ENGINEERING DRAWING NUMBER	QUANTITY PER	ITEM UM	ITEM TYP	OPT NBR	FIRST OP SEQ	LT ADJ	EFFECTIVE DATES FROM	TO
23	04	3640315	XT FET J310 Q1,Q2	J310	2.000	EA	4					
24	04	3640273	XT MRF901 Q3,Q4	MRF 901	2.000	EA	4					
25	04	3630175	XT NP2N3866 05W500M055V.4A Q5	2N3866	1.000	EA	4					
26	05	2110005	HEATSINK TO 5-9 11-12 Q5	NF-204	1.000	EA	4					
27	06	3600145	DIO 1N4154 25V 4NS SI D035 CR1,CR2,CR3	1N4154	3.000	EA	4					
28	04	3610243	DIO 5082-0180 CR4	HP 5082-0180	1.000	EA	4					
29	06	4310272	CAP .01 50V 103M C7,C10,C12,C13,C14,C17,C23,C26,C27,C35,C36,C37, C42	5018EM50RD103K	13.000	EA	4					
30	06	4280079	CAP EPOX-DIP 10/25V C11,C16,C22,C25,C34	1960106X0025KAI	5.000	EA	4					
31	06	4280046	CAP EPOX-DIP 2.2/35V 20% C5,C6	1960225X0035JAI	2.000	EA	4					
32	04	4300125	CAP N750 DISC 22PF 5% C8	DTN-22	1.000	EA	4					
33	05	4300042	CAP NPO DISC 6.8PF C30	DTZ-6R8	1.000	EA	4					
34	05	1050129	SCR BORH SLTD 4/40 X 1/4 SST	BINDER HEAD	2.000	EA	4					
35	05	1310093	CLIP PCL-606	05C2882 B	16.000	EA	4					
36	06	4410478	RES 68K OHM 1/4W 10% R29	RC07GF683K	1.000	EA	4					
37	04	4300133	CAP NPO DISC 22PF 5% C24	DTZ-22	1.000	EA	4					
38	05	4300067	CAP NPO DISC 10PF 5% C4,C15,C31	DTZ-10	3.000	EA	4					
39	04	4300182	CAP NPO DISC 68PF 5% C9	DTZ-68	1.000	EA	4					
40	05	4350658	CAP CHIP 15 PF C40	1008150JP500X	1.000	EA	4					
41	05	4210084	CAP MICA DIP 18PF C18	DM-15-180J	1.000	EA	4					
42	04	4200069	CAP MICA DIP 100PF C32	DM-5-101J	1.000	EA	4					
43	04	4350492	CAP MICA DIP 6PF C20	DM5-060D	1.000	EA	4					
44	04	4350484	CAP MICA DIP 18PF C21	DM5-180J	1.000	EA	4					

PRINT PHANTOM ITEMS
PRINT COMPONENTS
PRINT PHANTOM/COMPONENT COMMENTS

PARENT ITEM	CROSS REF ITEM	DESCRIPTION	BATCH QTY	ITEM TYPE	LOW LEVEL
9301581		LO 1ST PCL-606 940-960 MHZ RX	1	1	03
		ENGR DRAW 2002828-4 P	EFFEC 9/21/84	UNIT MEAS EA	PLANNER 450

BOM ITEM	LL CO	COMPONENT & CROSS REF.	DESCRIPTION & COMMENT	ENGINEERING DRAWING NUMBER	QUANTITY PER	UM	ITEM TYP	OPT NBR	FIRST OP SEQ	LT ADJ	EFFECTIVE DATES FROM	TO
45	04	4370342	CAP VAR 2.5-18PF C19,C28,C29	GXB18000	3.000	EA	4					
46	05	4350393	CAP CHIP 1 PF C44	100BIR08P500X	1.000	EA	4					
47	04	4240024	CAP GL 10PF C38	UY01-100J	1.000	EA	4					
48	04	4240040	CAP GL 20PF C43	UY01-200J	1.000	EA	4					
49	07	4370201	CAP MIN VAR PC .8-10PC C39,C41	MVM010W	2.000	EA	4					
50	05	4310132	CAP DISC .01/50V C1,C2,C3	UK-50-103	3.000	EA	4					
51	06	4410122	RES 100 OHM 1/4W 10% R1,R10,R13	RC07GF101K	3.000	EA	4					
52	06	4410163	RES 220 OHM 1/4W 10% R2	RC07GF221K	1.000	EA	4					
53	05	4410361	RES 8.2K OHM 1/4W 10% R3	RC07GF822K	1.000	EA	4					
54	04	4410460	RES 56K OHM 1/4W 10% R30	RC07GF563K	1.000	EA	4					
55	05	4410171	RES 270 OHM 1/4W 10% R5	RC07GF271K	1.000	EA	4					
56	05	4410031	RES 15 OHM 1/4W 10% R6,R16,R17,R26,R27	RC07GF150K	5.000	EA	4					
57	06	4410155	RES 180 OHM 1/4W 10% R8,R15	RC07GF181K	2.000	EA	4					
58	05	4410080	RES 47 OHM 1/4W 10% R9,R22	RC07GF470K	2.000	EA	4					
59	06	4410288	RES 2.2K OHM 1/4W 10% R11,R14,R21	RC07GF222K	3.000	EA	4					
60	06	4410304	RES 3.3K OHM 1/4W 10% R12	RC07GF332K	1.000	EA	4					
61	06	4410247	RES 1K OHM 1/4W 10% R18,R23,R25	RC07GF102K	3.000	EA	4					
62	06	4410338	RES 4.7K OHM 1/4W 10% R7,R19,R24	RC07GF472K	3.000	EA	4					
63	05	1090182	SCR BORH SLTD 6/32 X 1/4 SST VR1	BINDER HEAD	5.000	EA	4					
64	06	4410221	RES 680 OHM 1/4W 10% R4	RC07GF681K	1.000	EA	4					
65	05	4410106	RES 68 OHM 1/4W 10% R28	RC07GF680K	1.000	EA	4					
66	06	4410023	RES 10 OHM 1/4W 10% R20	RC07GF100K	1.000	EA	4					

PRINT PHANTOM ITEMS
PRINT COMPONENTS
PRINT PHANTOM/COMPONENT COMMENTS

PARENT ITEM	CROSS REF ITEM	DESCRIPTION	BATCH QTY	ITEM TYPE	LOW LEVEL
9301581		LO 1ST PCL-606 940-960 MHZ RX	1	E	03
		ENGR DRAW 2002828-4 P	EFFEC 9/21/84	UNIT MEAS EA	PLANNER 450

BOM ITEM	LL CD	COMPONENT & CROSS REF.	DESCRIPTION & COMMENT	ENGINEERING DRAWING NUMBER	QUANTITY PER	UM	ITEM TYP	OPT NBR	FIRST OP SEQ	LT ADJ	EFFECTIVE DATES FROM	TO
68	05	1090554	NUT HEX 6/32 SM PATT VR1	NUT 6/32 SM	1.000	EA	4					
69	05	1090588	WSHR LK #6 SR SST VR1	LOCKWASHER #6	1.000	EA	4					
70	05	1290188	SIL PAD VR1	7403-09-FR-51	1.000	EA	4					
71	06	4410213	RES 560 OHM 1/4W 10% R31	RC07GF561K	1.000	EA	4					
72	05	1130491	WASHER, SST 5710-35-16	5710-35-16	1.000	EA	4					
73	05	1641927	W BUSS 22GA	298	.300	FT	4					
74	04	3340809	XTAL PCL-606 RX Y1	30A0082 C	1.000	EA	4					
75	04	4300018	CAP NPO DISC 2.2PF C45	DTZ-2R2	1.000	EA	4					

PRINT PHANTOM ITEMS
PRINT COMPONENTS
PRINT PHANTOM/COMPONENT COMMENTS

PARENT ITEM	CROSS REF ITEM	DESCRIPTION	BATCH QTY	ITEM TYPE	LOW LEVEL
9301599		LO 1ST PCL-606 920-940 MHZ RX	1	1	03
		ENGR DRAW 2002828-5 P	EFFEC 9/21/84	UNIT MEAS EA	PLANNER 440

BOM ITEM	LL CO	COMPONENT & CROSS REF.	DESCRIPTION & COMMENT	ENGINEERING DRAWING NUMBER		QUANTITY PER	UM	ITEM TYP	OPT NBR	FIRST OP SEQ	LT ADJ	EFFECTIVE DATES FROM	TO
1	04	3473063	PCB 1ST LO PCL-606	5105944	L	1.000	EA	9					
2	04	2091148	MODULE COVER ASSY, CKT 1ST LO	05C2899	A	1.000	EA	1					
3	04	2091015	FRAME, 1ST LO PCL606 RCVR/XMTR	05D2872	D	1.000	EA	2					
4	05	2090967	FRAME BASE, MODULE PCL 606	05C2867	C	1.000	EA	2					
5	04	2091130	MODULE COVER ASSY, COMP 1ST LO	05C2898	A	1.000	EA	1					
6	06	4020467	FERROX CUBE 500 OHM L1,L2,L5,L7,L9,L10,L13	VK200 10/3B		7.000	EA	4					
7	04	4020509	IDCTR MINI-RED .15UH 10% L3	MR.15 10%		1.000	EA	4					
8	04	4020590	IDCTR 1.2 UH 10% L4	9230-22		1.000	EA	4					
9	04	4042057	IDCTR 10.5T BLK TYPE J L6	1171		1.000	EA	4					
10	04	4020608	IDCTR MINI RED 4.7 UH L8	MR 4.7		1.000	EA	4					
11	05	4020640	IDCTR MINI-RED .1 UH 5% L11,L12	MR .10 5%		2.000	EA	4					
12	04	4010872	COIL AIR 2T #18 .30 LH L14	3-2046	B	1.000	EA	1					
13	04	4100038	XFMR MCL T4-1 T1,T2	MCL T4-1		2.000	EA	4					
14	05	3650074	RGLTR LM340T12/7812 VARV1.5A VR1	LM340T-12 /7812		1.000	EA	4					
15	04	3350253	OVEN XTAL PCL 1-16-8-65 HR1	PCL1-16-8-65		1.000	EA	4					
16	04	1230986	STOF 1/4 RND 6-32 X 7/8 ALUM	8160-A-0632		2.000	EA	4					
17	05	3250495	SKT,PIN,.08500X.200L,GOLD FIN. Y1	450-3286-01-03		2.000	EA	4					
18	04	3291051	FILTER FEED THRU FL1,FL2,FL3	859617-1		3.000	EA	4					
19	05	3090230	CONN MALE RT ANGLE PC SNAP ON J2	17-1246-000		1.000	EA	4					
20	04	2300812	CABLE ASSY 950 1ST LO PCL-606	2481085	A	1.000	EA	1					
21	06	3290152	TEST JACK WHITE R ANGLE TP1,TP2,TP3,TP4	430-101		4.000	EA	4					
22	04	3730041	IC CA3018 XSTR ARRAY U1	CA-3018		1.000	EA	4					

PRINT PHANTOM ITEMS
PRINT COMPONENTS
PRINT PHANTOM/COMPONENT COMMENTS

PARENT ITEM	CROSS REF ITEM	DESCRIPTION	BATCH QTY	ITEM TYPE	LOW LEVEL
9301599		LO 1ST PCL-606 920-940 MHZ RX	1	1	03
		ENGR DRAW 2002828-5 P	EFFEC 9/21/84	UNIT MEAS EA	PLANNER 440

BOM ITEM	LL CD	COMPONENT & CROSS REF.	DESCRIPTION & COMMENT	ENGINEERING DRAWING NUMBER	QUANTITY PER	UM	ITEM TYP	OPT NBR	FIRST OP SEQ	LT ADJ	EFFECTIVE DATES FROM	TO
23	04	3640315	XT FET J310 Q1,Q2	J310	2.000	EA	4					
24	04	3640273	XT MRF901 Q3,Q4	MRF 901	2.000	EA	4					
25	04	3630175	XT NP2N3866 05W500M055V.4A Q5	2N3866	1.000	EA	4					
26	05	2110005	HEATSINK TO 5-9 11-12 Q5	NF-204	1.000	EA	4					
27	06	3600145	DIO 1N4154 25V 4NS SI DO35 CR1,CR2,CR3	1N4154	3.000	EA	4					
28	04	3610243	DIO 5082-0180 CR4	HP 5082-0180	1.000	EA	4					
29	06	4310272	CAP .01 50V 103M C7,C10,C12,C13,C14,C17,C23,C26,C27,C35,C36,C37, C42	5018EM50RD103K	13.000	EA	4					
30	06	4280079	CAP EPOX-DIP 10/25V C11,C16,C22,C25,C34	196D106X0025KAI	5.000	EA	4					
31	06	4280046	CAP EPOX-DIP 2.2/35V 20% C5,C6	196D225X0035JAI	2.000	EA	4					
32	04	4300125	CAP N750 DISC 22PF 5% C8	DTN-22	1.000	EA	4					
33	05	4300042	CAP NPO DISC 6.8PF C30	DTZ-6R8	1.000	EA	4					
34	05	1050129	SCR BDRH SLTD 4/40 X 1/4 SST	BINDER HEAD	2.000	EA	4					
35	05	1310093	CLIP PCL-606	05C2882 B	16.000	EA	4					
36	06	4410478	RES 68K OHM 1/4W 10% R29	RC07GF683K	1.000	EA	4					
37	04	4300133	CAP NPO DISC 22PF 5% C24	DTZ-22	1.000	EA	4					
38	05	4300067	CAP NPO DISC 10PF 5% C4,C15,C31	DTZ-10	3.000	EA	4					
39	04	4300182	CAP NPO DISC 68PF 5% C9	DTZ-68	1.000	EA	4					
40	05	4350658	CAP CHIP 15 PF C40	100B150JP500X	1.000	EA	4					
41	05	4210084	CAP MICA DIP 18PF C18	DM-15-180J	1.000	EA	4					
42	04	4200069	CAP MICA DIP 100PF C32	DM-5-101J	1.000	EA	4					
43	04	4350492	CAP MICA DIP 6PF C20	DM5-060D	1.000	EA	4					
44	04	4350484	CAP MICA DIP 18PF C21	DM5-180J	1.000	EA	4					

PRINT PHANTOM ITEMS
PRINT COMPONENTS
PRINT PHANTOM/COMPONENT COMMENTS

PARENT ITEM 9301599 | CROSS REF ITEM | DESCRIPTION LO 1ST PCL-606 920-940 MHZ RX ENGR DRAW 20D2828-5 P | BATCH QTY 1 EFFEC 9/21/84 | ITEM TYPE 1 UNIT MEAS EA | LOW LEVEL 03 PLANNER 440

BOM ITEM	LL CD	COMPONENT & CROSS REF.	DESCRIPTION & COMMENT	ENGINEERING DRAWING NUMBER	QUANTITY PER	UM	ITEM TYP	OPT NBR	FIRST OP SEQ	LT ADJ	EFFECTIVE DATES FROM	TO
45	04	4370342	CAP VAR 2.5-18PF C19,C28,C29	GXB18000	3.000	EA	4					
46	05	4350393	CAP CHIP 1 PF C44	100B1R0BP500X	1.000	EA	4					
47	04	4240024	CAP GL 10PF C38	UY01-100J	1.000	EA	4					
48	04	4240040	CAP GL 20PF C43	UY01-200J	1.000	EA	4					
49	07	4370201	CAP MIN VAR PC .8-10PC C39,C41	MVM010W	2.000	EA	4					
50	05	4310132	CAP DISC .01/50V C1,C2,C3	UK-50-103	3.000	EA	4					
51	06	4410122	RES 100 OHM 1/4W 10% R1,R10,R13	RC07GF101K	3.000	EA	4					
52	06	4410163	RES 220 OHM 1/4W 10% R2	RC07GF221K	1.000	EA	4					
53	05	4410361	RES 8.2K OHM 1/4W 10% R3	RC07GF822K	1.000	EA	4					
54	04	4410460	RES 56K OHM 1/4W 10% R30	RC07GF563K	1.000	EA	4					
55	05	4410171	RES 270 OHM 1/4W 10% R5	RC07GF271K	1.000	EA	4					
56	05	4410031	RES 15 OHM 1/4W 10% R6,R16,R17,R26,R27	RC07GF150K	5.000	EA	4					
57	06	4410155	RES 180 OHM 1/4W 10% R8,R15	RC07GF181K	2.000	EA	4					
58	05	4410080	RES 47 OHM 1/4W 10% R9,R22	RC07GF470K	2.000	EA	4					
59	06	4410288	RES 2.2K OHM 1/4W 10% R11,R14,R21	RC07GF222K	3.000	EA	4					
60	06	4410304	RES 3.3K OHM 1/4W 10% R12	RC07GF332K	1.000	EA	4					
61	06	4410247	RES 1K OHM 1/4W 10% R18,R23,R25	RC07GF102K	3.000	EA	4					
62	06	4410338	RES 4.7K OHM 1/4W 10% R7,R19,R24	RC07GF472K	3.000	EA	4					
63	05	1090182	SCR BORH SLTD 6/32 X 1/4 SST VR1	BINDER HEAD	5.000	EA	4					
64	06	4410221	RES 680 OHM 1/4W 10% R4	RC07GF681K	1.000	EA	4					
65	05	4410106	RES 68 OHM 1/4W 10% R28	RC07GF680K	1.000	EA	4					
66	06	4410023	RES 10 OHM 1/4W 10% R20	RC07GF100K	1.000	EA	4					

PRINT PHANTOM ITEMS
PRINT COMPONENTS
PRINT PHANTOM/COMPONENT COMMENTS

PARENT ITEM CROSS REF ITEM DESCRIPTION LO 1ST PCL-606 920-940 MHZ RX BATCH QTY 1 ITEM TYPE 1 LOW LEVEL 03
9301599 ENGR DRAW 2002828-5 P EFFEC 9/21/84 UNIT MEAS EA PLANNER 440

BOM ITEM	LL CD	COMPONENT & CROSS REF.	DESCRIPTION & COMMENT	ENGINEERING DRAWING NUMBER	QUANTITY PER	UM	ITEM TYP	OPT NBR	FIRST OP SEQ	LT ADJ	EFFECTIVE DATES FROM	TO
68	05	1090554	NUT HEX 6/32 SM PATT VR1	NUT 6/32 SM	1.000	EA	4					
69	05	1090588	WSHR LK #6 SR SST VR1	LOCKWASHER #6	1.000	EA	4					
70	05	1290188	SIL PAD VR1	7403-09-FR-51	1.000	EA	4					
71	06	4410213	RES 560 OHM 1/4W 10% R31	RC07GF561K	1.000	EA	4					
72	05	1130491	WASHER, SST 5710-35-16	5710-35-16	1.000	EA	4					
73	05	1641927	W BUSS 22GA	298	.300	FT	4					
74	04	3340809	XTAL PCL-606 RX Y1	30A0082 C	1.000	EA	4					
75	05	4300034	CAP NPO DISC 4.7PF C45	DTZ-4R7	1.000	EA	4					

PRINT PHANTOM ITEMS
PRINT COMPONENTS
PRINT PHANTOM/COMPONENT COMMENTS

PARENT ITEM 9301607 | CROSS REF ITEM | DESCRIPTION LO 1ST PCL-606 910-920 MHZ RX ENGR DRAW 2002828-6 P | BATCH QTY 1 EFFEC 9/21/84 | ITEM TYPE 1 UNIT MEAS EA | LOW LEVEL 03 PLANNER 440

BOM ITEM	LL CO	COMPONENT & CROSS REF.	DESCRIPTION & COMMENT	ENGINEERING DRAWING NUMBER		QUANTITY PER	UM	ITEM TYP	OPT NBR	FIRST OP SEQ	LT ADJ	EFFECTIVE DATES FROM	TO
1	04	3473063	PCB 1ST LO PCL-606	51D5944	L	1.000	EA	9					
2	04	2091148	MODULE COVER ASSY, CKT 1ST LO	05C2899	A	1.000	EA	1					
3	04	2091015	FRAME, 1ST LO PCL606 RCVR/XMTR	05D2872	D	1.000	EA	2					
4	05	2090967	FRAME BASE, MODULE PCL 606	05C2867	C	1.000	EA	2					
5	04	2091130	MODULE COVER ASSY, COMP 1ST LO	05C2898	A	1.000	EA	1					
6	06	4020467	FERROX CUBE 500 OHM L1,L2,L5,L7,L9,L10,L13	VK200 10/3B		7.000	EA	4					
7	04	4020509	IDCTR MINI-RED .15UH 10% L3	MR.15 10%		1.000	EA	4					
8	04	4020590	IDCTR 1.2 UH 10% L4	9230-22		1.000	EA	4					
9	04	4042057	IDCTR 10.5T BLK TYPE J L6	1171		1.000	EA	4					
10	04	4020608	IDCTR MINI RED 4.7 UH L8	MR 4.7		1.000	EA	4					
11	05	4020640	IDCTR MINI-RED .1 UH 5% L11,L12	MR .10 5%		2.000	EA	4					
12	04	4010872	COIL AIR 2T #18 .30 LH L14	3-2046	B	1.000	EA	1					
13	04	4100038	XFMR MCL T4-1 T1,T2	MCL T4-1		2.000	EA	4					
14	05	3650074	RGLTR LM340T12/7812 VARV1.5A VR1	LM340T-12 /7812		1.000	EA	4					
15	04	3350253	OVEN XTAL PCL 1-16-8-65 HR1	PCL1-16-8-65		1.000	EA	4					
16	04	1230986	STDF 1/4 RND 6-32 X 7/8 ALUM	8160-A-0632		2.000	EA	4					
17	05	3250495	SKT,PIN,.08500X.200L,GOLD FIN. Y1	450-3286-01-03		2.000	EA	4					
18	04	3291051	FILTER FEED THRU FL1,FL2,FL3	859617-1		3.000	EA	4					
19	05	3090230	CONN MALE RT ANGLE PC SNAP ON J2	17-1246-000		1.000	EA	4					
20	04	2300812	CABLE ASSY 950 1ST LO PCL-606	2481085	A	1.000	EA	1					
21	06	3290152	TEST JACK WHITE R ANGLE TP1,TP2,TP3,TP4	430-101		4.000	EA	4					
22	04	3730041	IC CA3018 XSTR ARRAY U1	CA-3018		1.000	EA	4					

PRINT PHANTOM ITEMS
PRINT COMPONENTS
PRINT PHANTOM/COMPONENT COMMENTS

PARENT ITEM	CROSS REF ITEM	DESCRIPTION	BATCH QTY	ITEM TYPE	LOW LEVEL
9301607		LO 1ST PCL-606 910-920 MHZ RX	1	1	03
		ENGR DRAW 2002828-6 P	EFFEC 9/21/84	UNIT MEAS EA	PLANNER 440

BOM ITEM	LL CD	COMPONENT & CROSS REF.	DESCRIPTION & COMMENT	ENGINEERING DRAWING NUMBER	QUANTITY PER	UM	ITEM TYP	OPT NBR	FIRST OP SEQ	LT ADJ	EFFECTIVE DATES FROM	TO
23	04	3640315	XT FET J310 Q1,Q2	J310	2.000	EA	4					
24	04	3640273	XT MRF901 Q3,Q4	MRF 901	2.000	EA	4					
25	04	3630175	XT NP2N3866 05W500M055V.4A Q5	2N3866	1.000	EA	4					
26	05	2110005	HEATSINK TO 5-9 11-12 Q5	NF-204	1.000	EA	4					
27	06	3600145	DIO 1N4154 25V 4NS SI 0035 CR1,CR2,CR3	1N4154	3.000	EA	4					
28	04	3610243	DIO 5082-0180 CR4	HP 5082-0180	1.000	EA	4					
29	06	4310272	CAP .01 50V 103M C7,C10,C12,C13,C14,C17,C23,C26,C27,C35,C36,C37, C42	5018EM50RD103K	13.000	EA	4					
30	06	4280079	CAP EPOX-DIP 10/25V C11,C16,C22,C25,C34	1960106X0025KAI	5.000	EA	4					
31	06	4280046	CAP EPOX-DIP 2.2/35V 20% C5,C6	1960225X0035JAI	2.000	EA	4					
32	04	4300125	CAP N750 DISC 22PF 5% C8	DTN-22	1.000	EA	4					
33	05	4300042	CAP NPO DISC 6.8PF C30,C45	DTZ-6R8	2.000	EA	4					
34	05	1050129	SCR BORH SLTD 4/40 X 1/4 SST	BINDER HEAD	2.000	EA	4					
35	05	1310093	CLIP PCL-606	05C2882 B	16.000	EA	4					
36	06	4410478	RES 68K OHM 1/4W 10% R29	RC07GF683K	1.000	EA	4					
37	04	4300133	CAP NPO DISC 22PF 5% C24	DTZ-22	1.000	EA	4					
38	05	4300067	CAP NPO DISC 10PF 5% C4,C15,C31	DTZ-10	3.000	EA	4					
39	04	4300182	CAP NPO DISC 68PF 5% C9	DTZ-68	1.000	EA	4					
40	05	4350658	CAP CHIP 15 PF C40	1008150JP500X	1.000	EA	4					
41	05	4210084	CAP MICA DIP 18PF C18	DM-15-180J	1.000	EA	4					
42	04	4200069	CAP MICA DIP 100PF C32	DM-5-101J	1.000	EA	4					
43	04	4350492	CAP MICA DIP 6PF C20	DM5-060D	1.000	EA	4					
44	04	4350484	CAP MICA DIP 18PF C21	DM5-180J	1.000	EA	4					

PRINT PHANTOM ITEMS
PRINT COMPONENTS
PRINT PHANTOM/COMPONENT COMMENTS

PARENT ITEM 9301607 | CROSS REF ITEM | DESCRIPTION LO 1ST PCL-606 910-920 MHZ RX ENGR DRAW 2002828-6 P | BATCH QTY 1 EFFEC 9/21/84 | ITEM TYPE 1 UNIT MEAS EA | LOW LEVEL 03 PLANNER 440

BOM ITEM	LL CD	COMPONENT & CROSS REF.	DESCRIPTION & COMMENT	ENGINEERING DRAWING NUMBER	QUANTITY PER	UM	ITEM TYP	OPT NBR	FIRST OP SEQ	LT ADJ	EFFECTIVE DATES FROM	TO
45	04	4370342	CAP VAR 2.5-18PF C19,C28,C29	GXB18000	3.000	EA	4					
46	05	4350393	CAP CHIP 1 PF C44	100B1R0BP500X	1.000	EA	4					
47	04	4240024	CAP GL 10PF C38	UY01-100J	1.000	EA	4					
48	04	4240040	CAP GL 20PF C43	UY01-200J	1.000	EA	4					
49	07	4370201	CAP MIN VAR PC .8-10PC C39,C41	MVM010W	2.000	EA	4					
50	05	4310132	CAP DISC .01/50V C1,C2,C3	UK-50-103	3.000	EA	4					
51	06	4410122	RES 100 OHM 1/4W 10% R1,R10,R13	RC07GF101K	3.000	EA	4					
52	06	4410163	RES 220 OHM 1/4W 10% R2	RC07GF221K	1.000	EA	4					
53	05	4410361	RES 8.2K OHM 1/4W 10% R3	RC07GF822K	1.000	EA	4					
54	04	4410460	RES 56K OHM 1/4W 10% R30	RC07GF563K	1.000	EA	4					
55	05	4410171	RES 270 OHM 1/4W 10% R5	RC07GF271K	1.000	EA	4					
56	05	4410031	RES 15 OHM 1/4W 10% R6,R16,R17,R26,R27	RC07GF150K	5.000	EA	4					
57	06	4410155	RES 180 OHM 1/4W 10% R8,R15	RC07GF181K	2.000	EA	4					
58	05	4410060	RES 47 OHM 1/4W 10% R9,R22	RC07GF470K	2.000	EA	4					
59	06	4410288	RES 2.2K OHM 1/4W 10% R11,R14,R21	RC07GF222K	3.000	EA	4					
60	06	4410304	RES 3.3K OHM 1/4W 10% R12	RC07GF332K	1.000	EA	4					
61	06	4410247	RES 1K OHM 1/4W 10% R18,R23,R25	RC07GF102K	3.000	EA	4					
62	06	4410338	RES 4.7K OHM 1/4W 10% R7,R19,R24	RC07GF472K	3.000	EA	4					
63	05	1090182	SCR BDRH SLTD 6/32 X 1/4 SST VR1	BINDER HEAD	5.000	EA	4					
64	06	4410221	RES 680 OHM 1/4W 10% R4	RC07GF681K	1.000	EA	4					
65	05	4410106	RES 68 OHM 1/4W 10% R28	RC07GF680K	1.000	EA	4					
66	06	4410023	RES 10 OHM 1/4W 10% R20	RC07GF100K	1.000	EA	4					

PRINT PHANTOM ITEMS
PRINT COMPONENTS
PRINT PHANTOM/COMPONENT COMMENTS

PARENT ITEM	CROSS REF ITEM	DESCRIPTION	BATCH QTY	ITEM TYPE	LOW LEVEL
9301607		LO 1ST PCL-606 910-920 MHZ RX	1	1	03
		ENGR DRAW 2002828-6 P	EFFEC 9/21/84	UNIT MEAS EA	PLANNER 440

BOM ITEM	LL CD	COMPONENT & CROSS REF.	DESCRIPTION & COMMENT	ENGINEERING DRAWING NUMBER	QUANTITY PER	UM	ITEM TYP	OPT NBR	FIRST OP SEQ	LT ADJ	EFFECTIVE DATES FROM	TO
68	05	1090554	NUT HEX 6/32 SM PATT VR1	NUT 6/32 SM	1.000	EA	4					
69	05	1090588	WSHR LK #6 SR SST VR1	LOCKWASHER #6	1.000	EA	4					
70	05	1290188	SIL PAD VR1	7403-09-FR-51	1.000	EA	4					
71	06	4410213	RES 560 OHM 1/4W 10% R31	RC07GF561K	1.000	EA	4					
72	05	1130491	WASHER, SST 5710-35-16	5710-35-16	1.000	EA	4					
73	05	1641927	W BUSS 22GA	298	.300	FT	4					
74	04	3340809	XTAL PCL-606 RX Y1	30A0082 C	1.000	EA	4					

DOUBLE CONVERTER

Schematic 91D7277
Parts List 20D2824-1

Much of the selectivity of the Receiver is provided by the 70 MHz to 3 MHz Double Converter module. The input signal at 70 MHz is amplified and bandpass filtered and then converted to the second IF frequency at 10.7 MHz. The bandwidth of the second IF circuit is user selectable by switching out the second filter in the IF. This does not change the gain of the IF. The 10.7 MHz signal is converted to the third IF frequency at 3 mHz, bandpass filtered, and passed to the output.

After preamplification in the Preamplifier and First Mixer module, the input signal is amplified by Q1 to overcome the insertion loss of the 70 MHz bandpass filter. This amplifier also acts as an impedance transformer from the 50 ohm input impedance to the 3000 ohm impedance of the filter.

The primary purpose of the 70 MHz bandpass filter is to reduce undesired signals to levels that will not cause intermodulation in the second mixer and second IF amplifiers. The 1 dB bandwidth of this filter is 500 kHz, and its 10 dB bandwidth is 1.6 MHz. The output of the filter is impedance transformed down to 50 ohms to match the mixer.

The signal input to second mixer U1 is mixed with the 80.7 MHz second LO signal to produce the second IF signal at 10.7 MHz. The local oscillator signals are provided by the Second and Third Local Oscillator module.

The second mixer is double balanced, and its IF port (10.7 MHz) is diplexed. The low-pass leg (L8, C21, L10 with a 14 MHz cutoff) connects the signals centered on 10.7 MHz to the first 10.7 MHz amplifier (Q2). The high-pass leg (C20, L9, C19) terminates higher frequency signals in R4.

The output of the first 10.7 MHz amplifier (Q2) is buffered by emitter follower Q3. The source impedance required by filter FL1 is set by R10.

The 10.7 MHz IF filters FL1 and FL2 are linear phase monolithic ceramic resonators. L13 and C31, and L14 and C37, allow slight adjustment of the center frequency of the filters to align both filters on the IF frequency. Amplifiers U2 and U3 maintain the signal level through the filters. Inductor L15 and capacitor C43 form a harmonic and noise filter for the third mixer.

The input to third mixer U4 is mixed with the 13.7 MHz third LO signal to produce the third IF signal at 3 MHz. The third mixer is also double balanced and diplexed. The output signal is sent to the FM Demodulator module.

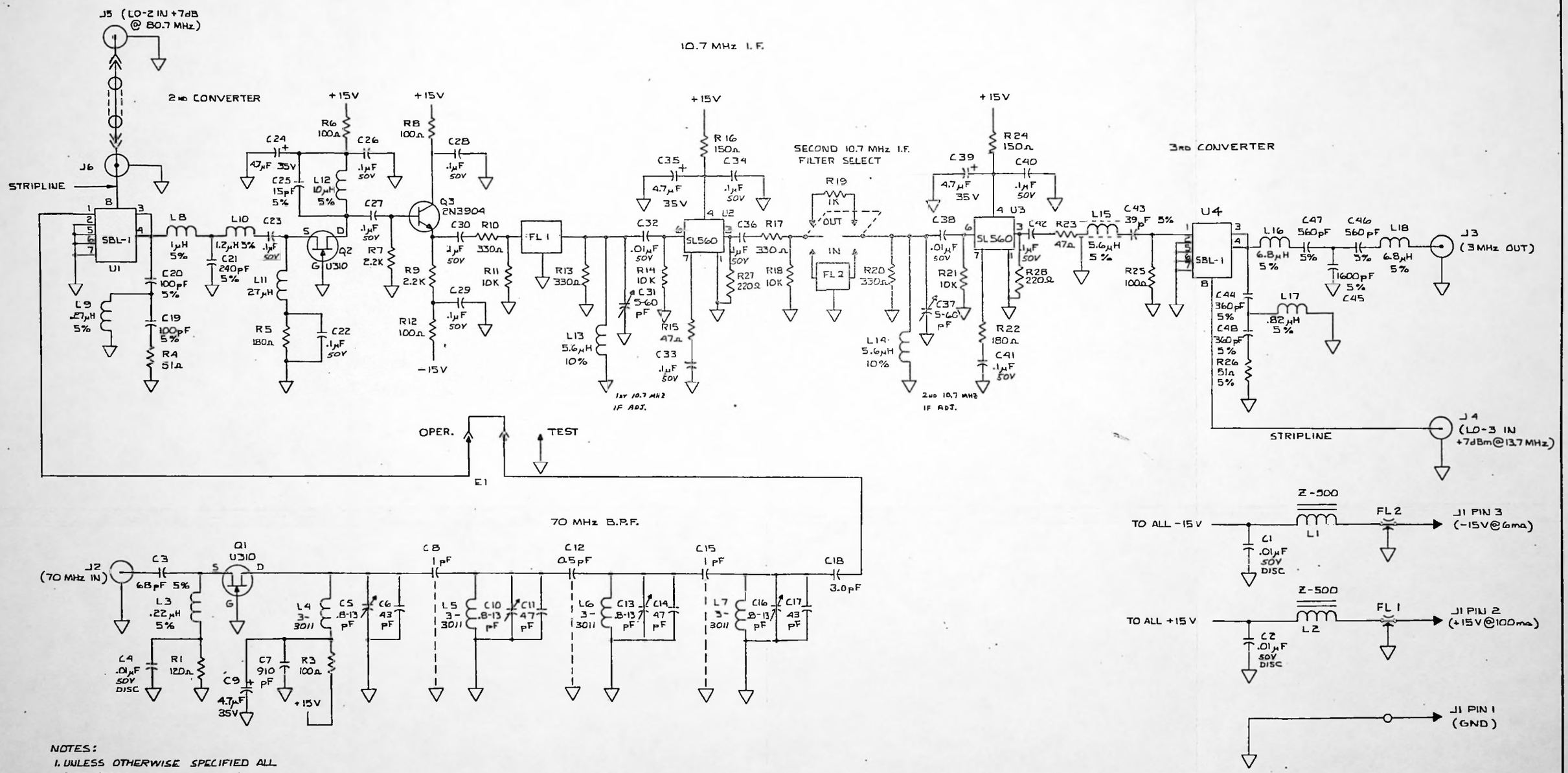

NOTES:

1. UNLESS OTHERWISE SPECIFIED ALL RESISTORS ARE IN OHMS, 1/4 W, 5 %; CAPACITORS ARE IN MICROFARADS; INDUCTORS IN MICRO HENRYS.
2. TRIM & DRILL 5105945
3. COMPONENT LAYOUT 20D2824

K	CHANGE NOTE 1 ALL RES. WERE 1/8 W ECO 5773 15 MAR 83 CH	
J	C7 WAS .01µF DELETE R2 ECO 5773 34 FEB CH	
H	C, C1 WERE 5-60 PF ECO 5714 13 JAN 83 CH	
G	ADDED R27 AND R28 PER ECO 5714 C7 WAS .001µF	
F	ADDED C42 PER ECO 5714	
E	ADDED C43 PER ECO 5714	
D	RE-DESIGNED TO PRODUCTION	
C	C13, 14 WAS DISC CAP 50V CHANGED TO 100V	
B	C13, 14 WAS DISC CAP 50V CHANGED TO 1µF CAP	
A	ECO 5288	

MOSELEY ASSOCIATES, INC.
SANTA BARBARA RESEARCH PARK
GOLETA, CALIFORNIA

70-3 MHz DOUBLE CONVERTER
PCL-606 SCHEMATIC

91D7277 K

PRINT PHANTOM ITEMS
PRINT COMPONENTS
PRINT PHANTOM/COMPONENT COMMENTS

PARENT ITEM	CROSS REF ITEM	DESCRIPTION	BATCH QTY	ITEM TYPE	LOW LEVEL
9301235		70-3 MHZ COMP DBL CONV PCL-606	1	1	03
		ENGR DRAW 20D2824-1 X	EFFEC 8/20/84	UNIT MEAS EA	PLANNER 440

BOM ITEM	LL CD	COMPONENT & CROSS REF.	DESCRIPTION & COMMENT	ENGINEERING DRAWING NUMBER		QUANTITY PER	UM	ITEM TYP	OPT NBR	FIRST OP SEQ	LT ADJ	EFFECTIVE DATES FROM	TO
1	04	3473022	PCB 70-3MHZ DBL CONV PCL-606	51D5945	J	1.000	EA	9					
2	05	3630456	XT 2N3904 Q3	2N3904		1.000	EA	4					
3	05	1090182	SCR BDRH SLTD 6/32 X 1/4 SST	BINDER HEAD		4.000	EA	4					
4	05	3350196	MIXER BAL U1,U4	SBL-1		2.000	EA	4					
5	05	3730769	IC SL560C U2,U3	SL560C		2.000	EA	4					
6	04	1230986	STDF 1/4 RND 6-32 X 7/8 ALUM	8160-A-0632		2.000	EA	4					
7	05	3640307	XT U310 Q1,Q2	U310		2.000	EA	4					
8	04	2062529	SHIELD PARTITION	05B2810	BD	3.000	EA	2					
9	04	2300820	CABLE ASSY DBL CONV PCL-606	24B1086	A	1.000	EA	1					
10	04	2091031	FRAME DBL CONV PCL 606 RCVR	05D2874	E	1.000	EA	2					
11	05	2090967	FRAME BASE, MODULE PCL 606	05C2867	C	1.000	EA	2					
12	04	2091163	MODULE COVER ASSY CKT DBL CONV	05C2901	C	1.000	EA	1					
13	04	2091155	MODULE COVER ASSY,COMP DBL CON	05C2900	C	1.000	EA	1					
14	05	2110237	HEATSINK TO-5 PUSH-ON	#11158		2.000	EA	4					
15	04	3190782	SW DPDT PC 573-2119 S1	573-21190301100		1.000	EA	4					
16	05	3090230	CONN MALE RT ANGLE PC SNAP ON J2,J3,J4	17-1246-000		3.000	EA	4					
18	05	3291069	TERM FEED THRU FL3,FL4	859657-1		2.000	EA	4					
19	06	4310264	CAP .1 50V 1042 C22,C23,C26,C27,C28,C29,C30,C33,C34,C36,C40,C41, C42	5020ES50RD104		13.000	EA	4					
20	06	4310272	CAP .01 50V 103M C32,C38	5018EM50RD103K		2.000	EA	4					
21	06	4210548	CAP MICA DIP 910PF C7	DM-15-911J		1.000	EA	4					
22	06	4280053	CAP EPOX-DIP 4.7/35V 20% C9,C24,C35,C39	196D475X9035JA1		4.000	EA	4					
23	05	4210167	CAP MICA DIP 39PF C43	DM-15-390J		1.000	EA	4					

PRINT PHANTOM ITEMS
PRINT COMPONENTS
PRINT PHANTOM/COMPONENT COMMENTS

PARENT ITEM	CROSS REF ITEM	DESCRIPTION	BATCH QTY	ITEM TYPE	LOW LEVEL
9301235		70-3 MHZ COMP DBL CONV PCL-606	1	1	03
		ENGR DRAW 20D2824-1 X	EFFEC 8/20/84	UNIT MEAS EA	PLANNER 440

BOM ITEM	LL CD	COMPONENT & CROSS REF.	DESCRIPTION & COMMENT	ENGINEERING DRAWING NUMBER	QUANTITY PER	UM	ITEM TYP	OPT NBR	FIRST OP SEQ	LT ADJ	EFFECTIVE DATES FROM	TO
24	06	4210266	CAP MICA DIP 100PF C19,C20	DM-15-101J	2.000	EA	4					
25	04	4210076	CAP MICA DIP 15PF C25	DM-15-150J	1.000	EA	4					
26	05	4210373	CAP MICA DIP 240PF C21	DM-15-241J	1.000	EA	4					
27	05	4210480	CAP MICA DIP 560PF C46,C47	DM-15-561J	2.000	EA	4					
28	04	4210423	CAP MICA DIP 360PF C44,C48	DM-15-361J	2.000	EA	4					
29	04	4210225	CAP MICA DIP 68PF C3	DM-15-680J	1.000	EA	4					
30	05	4210183	CAP MICA DIP 47PF C11,C14	DM-15-470J	2.000	EA	4					
31	04	4220075	CAP MICA DIP 1600PF C45	DM-19-162J	1.000	EA	4					
32	05	4310132	CAP DISC .01/50V C1,C2,C4	UK-50-103	3.000	EA	4					
33	04	4350518	CAP CHIP .5 PF C12	100B0R5BNMS500X	1.000	EA	4					
34	05	4210175	CAP MICA DIP 43PF C6,C17	DM-15-430J	2.000	EA	4					
35	04	4240198	CAP 3.0 PF C18	100B3R0BNMS500X	1.000	EA	4					
36	07	4370201	CAP MIN VAR PC .8-10PC C5,C10,C13,C16	MVM010W	4.000	EA	4					
37	05	4350500	CAP 5-60 PF C31,C37	GX060000	2.000	EA	4					
38	04	4350708	CAP CHIP 1 PF WITH LEADS C8,C15	100B1R0BNMS500X	2.000	EA	4					
39	05	4460051	RES 100 OHM 1/4W 5% R3,R6,R8,R12,R25	RC07GF101J	5.000	EA	4					
40	05	4460820	RES 180 OHM 1/4W 5% R5,R22	RC07GF181J	2.000	EA	4					
41	05	4460838	RES 330 OHM 1/4W 5% R10,R13,R17,R20	RC07GF331J	4.000	EA	4					
42	05	4460192	RES 2.2K OHM 1/4W 5% R7,R9	RC07GF222J	2.000	EA	4					
43	05	4460317	RES 10K OHM 1/4W 5% R11,R14,R18,R21	RC07GF103J	4.000	EA	4					
44	04	4460812	RES 150 OHM 1/4W 5% R16,R24	RC07GF151J	2.000	EA	4					
45	05	4460788	RES 47 OHM 1/4W 5% R15,R23	RC07GF470J	2.000	EA	4					

PRINT PHANTOM ITEMS
PRINT COMPONENTS
PRINT PHANTOM/COMPONENT COMMENTS

PARENT ITEM	CROSS REF ITEM	DESCRIPTION	BATCH QTY	ITEM TYPE	LOW LEVEL
9301235		70-3 MHZ COMP DBL CONV PCL-606	1	1	03
		ENGR DRAW 2002824-1 X	EFFEC 8/20/84	UNIT MEAS EA	PLANNER 440

BOM ITEM	LL CD	COMPONENT & CROSS REF.	DESCRIPTION & COMMENT	ENGINEERING DRAWING NUMBER	QUANTITY PER	ITEM UM	ITEM TYP	OPT NBR	FIRST OP SEQ	LT ADJ	EFFECTIVE DATES FROM	TO
46	04	4460036	RES 51 OHM 1/4W 5% R4,R26	RC07GF510J	2.000	EA	4					
48	05	4460655	RES 120 OHM 1/4W 5% R1	RC07GF121J	1.000	EA	4					
49	05	4460143	RES 1K OHM 1/4W 5% R19	RC07GF102J	1.000	EA	4					
50	05	4130035	FERRITE BEAD R23	K S 001 00/3B	1.000	EA	4					
52	04	2202299	COAX ASSY SMB/S-SMB PC/RT 3.25 J5,J6	2481091-2 A	1.000	EA	4					
53	04	4020517	IDCTR MINI-RED .27 UH 5% L9	MR .27 5%	1.000	EA	4					
54	04	4020624	IDCTR 1.0 UH 5% MR 1.0 L8	MR 1.0 5%	1.000	EA	4					
55	04	4020525	IDCTR MINI-RED 1.2UH 5% L10	MR 1.2 5%	1.000	EA	4					
56	04	4020459	LNX/FU MINI-RED 10UH 5% L12	MR 10 / 5%	1.000	EA	4					
57	04	4020541	IDCTR MINI-RED .22 UH 5% L3	MR .22 5%	1.000	EA	4					
58	04	4020673	IDCTR MINI-RED 27UH 10% L11	MR 27 10%	1.000	EA	4					
59	04	4020566	IDCTR MINI-RED 5.6 UH 5% L13,L14,L15	MR 5.6 5%	3.000	EA	4					
60	04	4020574	IDCTR MINI-RED 6.8 UH 5% L16,L18	MR 6.8 5%	2.000	EA	4					
61	04	4020582	IDCTR MINI-RED .82 UH 5% L17	MR .82 5%	1.000	EA	4					
62	05	4460077	RES 220 OHM 1/4W 5% R27,R28	RC07GF221J	2.000	EA	4					
63	04	4050191	TOROID PC MOUNTING L4,L5,L6,L7	03-3011 C	4.000	EA	1					
64	06	4020467	FERROX CUBE 500 OHM L1,L2	VK200 10/3B	2.000	EA	4					
65	04	3250941	SKT 3 PIN	1-583773-1	2.000	EA	4					
66	04	3090370	CONN 3 PIN E1	87224-3	1.000	EA	4					
67	04	3250917	MINI-JUMP	65474-001	1.000	EA	4					
68	05	3250370	SKT IC TO-5 8 PIN	SD-5178	2.000	EA	4					
69	04	2062602	SHIELD MAGNETIC CYLIN PCL-606 L15	0582836 A0	1.000	EA	2					

PRINT PHANTOM ITEMS
PRINT COMPONENTS
PRINT PHANTOM/COMPONENT COMMENTS

PARENT ITEM	CROSS REF ITEM	DESCRIPTION	BATCH QTY	ITEM TYPE	LOW LEVEL
9301235		70-3 MHZ COMP DBL CONV PCL-606	1	1	03
		ENGR DRAW 2002824-1 X	EFFEC 8/20/84	UNIT MEAS EA	PLANNER 440

BOM ITEM	LL CO	COMPONENT & CROSS REF.	DESCRIPTION & COMMENT	ENGINEERING DRAWING NUMBER	QUANTITY PER	UM	ITEM TYP	OPT NOR	FIRST OP SEQ	LT ADJ	EFFECTIVE DATES FROM	TO
70	05	1050129	SCR BDRH SLTD 4/40 X 1/4 SST	BINDER HEAD	2.000	EA	4					
71	05	1130491	WASHER. SST 5710-35-16	5710-35-16	3.000	EA	4					
72	05	1310093	CLIP PCL-606	05C2882 B	16.000	EA	4					
73	04	3350261	FLTR CERAMIC 10.7MX FL1,FL2	SFE 10.7 MX-A	2.000	EA	4					

PRINT PHANTOM ITEMS
PRINT COMPONENTS
PRINT PHANTOM/COMPONENT COMMENTS

PARENT ITEM 9301177 | CROSS REF ITEM | DESCRIPTION 70-3 MHZ MONO DBL CONV PCL-606 ENGR DRAW 2002824-2 X | BATCH QTY 1 EFFEC 8/20/84 | ITEM TYPE 1 UNIT MEAS EA | LOW LEVEL 03 PLANNER 450

BOM ITEM	LL CO	COMPONENT & CROSS REF.	DESCRIPTION & COMMENT	ENGINEERING DRAWING NUMBER		QUANTITY PER	UM	ITEM TYP	OPT NBR	FIRST OP SEQ	LT ADJ	EFFECTIVE DATES FROM	TO
1	05	3640307	XT U310 Q1,Q2	U310		2.000	EA	4					
2	05	3630456	XT 2N3904 Q3	2N3904		1.000	EA	4					
3	05	1090182	SCR BDRH SLTD 6/32 X 1/4 SST	BINDER HEAD		4.000	EA	4					
4	05	3350196	MIXER BAL U1,U4	SBL-1		2.000	EA	4					
5	05	3730769	IC SL560C U2,U3	SL560C		2.000	EA	4					
6	04	1230986	STDF 1/4 RND 6-32 X 7/8 ALUM	8160-A-0632		2.000	EA	4					
7	04	3473022	PCB 70-3MHZ DBL CONV PCL-606	5105945	J	1.000	EA	9					
8	04	2062529	SHIELD PARTITION	0582810	B0	3.000	EA	2					
9	04	2300820	CABLE ASSY DBL CONV PCL-606	2481086	A	1.000	EA	1					
10	04	2091031	FRAME DBL CONV PCL 606 RCVR	0502874	E	1.000	EA	2					
11	05	2090967	FRAME BASE, MODULE PCL 606	05C2867	C	1.000	EA	2					
12	04	2091163	MODULE COVER ASSY CKT DBL CONV	05C2901	C	1.000	EA	1					
13	04	2091155	MODULE COVER ASSY,COMP DBL CON	05C2900	C	1.000	EA	1					
14	05	2110237	HEATSINK TO-5 PUSH-ON	#11158		2.000	EA	4					
15	04	3190782	SW OPOT PC 573-2119 S1	573-21190301100		1.000	EA	4					
16	05	3090230	CONN MALE RT ANGLE PC SNAP ON J2,J3,J4	17-1246-000		3.000	EA	4					
18	05	3291069	TERM FEED THRU FL3,FL4	859657-1		2.000	EA	4					
19	06	4310264	CAP .1 50V 1042 C22,C23,C26,C27,C28,C29,C30,C33,C34,C36,C40,C41, C42	5020ES50RD104		13.000	EA	4					
20	06	4310272	CAP .01 50V 103M C32,C38	5018EM50RD103K		2.000	EA	4					
21	06	4210548	CAP MICA DIP 910PF C7	DM-15-911J		1.000	EA	4					
22	06	4280053	CAP EPOX-DIP 4.7/35V 20% C9,C24,C35,C39	196D475X9035JAI		4.000	EA	4					
23	05	4210167	CAP MICA DIP 39PF C43	DM-15-390J		1.000	EA	4					

PRINT PHANTOM ITEMS
PRINT COMPONENTS
PRINT PHANTOM/COMPONENT COMMENTS

PARENT ITEM	CROSS REF ITEM	DESCRIPTION	BATCH QTY	ITEM TYPE	LOW LEVEL
9301177		70-3 MHZ MONO DBL CONV PCL-606	1	1	03
		ENGR DRAW 2002824-2 X	EFFEC 8/20/84	UNIT MEAS EA	PLANNER 450

BOM ITEM	LL CD	COMPONENT & CROSS REF.	DESCRIPTION & COMMENT	ENGINEERING DRAWING NUMBER	QUANTITY PER	UM	ITEM TYP	OPT NBR	FIRST OP SEQ	LT ADJ	EFFECTIVE DATES FROM	TO
24	06	4210266	CAP MICA DIP 100PF C19,C20	DM-15-101J	2.000	EA	4					
25	04	4210076	CAP MICA DIP 15PF C25	DM-15-150J	1.000	EA	4					
26	05	4210373	CAP MICA DIP 240PF C21	DM-15-241J	1.000	EA	4					
27	05	4210480	CAP MICA DIP 560PF C46,C47	DM-15-561J	2.000	EA	4					
28	04	4210423	CAP MICA DIP 360PF C44,C48	DM-15-361J	2.000	EA	4					
29	04	4210225	CAP MICA DIP 68PF C3	DM-15-680J	1.000	EA	4					
30	05	4210183	CAP MICA DIP 47PF C11,C14	DM-15-470J	2.000	EA	4					
31	04	4220075	CAP MICA DIP 1600PF C45	DM-19-162J	1.000	EA	4					
32	05	4310132	CAP DISC .01/50V C1,C2,C4	UK-50-103	3.000	EA	4					
33	04	4350518	CAP CHIP .5 PF C12	100B0R58NMS500X	1.000	EA	4					
34	05	4210175	CAP MICA DIP 43PF C6,C17	DM-15-430J	2.000	EA	4					
35	04	4240198	CAP 3.0 PF C18	100B3R0BNMS500X	1.000	EA	4					
36	07	4370201	CAP MIN VAR PC .8-10PC C5,C10,C13,C16	MVM010W	4.000	EA	4					
37	05	4350500	CAP 5-60 PF C31,C37	GXD60000	2.000	EA	4					
38	04	4350708	CAP CHIP 1 PF WITH LEADS C4,C15	100B1R0BNMS500X	2.000	EA	4					
39	05	4460051	RES 100 OHM 1/4W 5% R3,R6,R8,R12,R25	RC07GF101J	5.000	EA	4					
40	05	4460820	RES 180 OHM 1/4W 5% R5,R22	RC07GF181J	2.000	EA	4					
41	05	4460838	RES 330 OHM 1/4W 5% R10,R13,R17,R20	RC07GF331J	4.000	EA	4					
42	05	4460192	RES 2.2K OHM 1/4W 5% R7,R9	RC07GF222J	2.000	EA	4					
43	05	4460317	RES 10K OHM 1/4W 5% R11,R14,R18,R21	RC07GF103J	4.000	EA	4					
44	04	4460812	RES 150 OHM 1/4W 5% R16,R24	RC07GF151J	2.000	EA	4					
45	05	4460788	RES 47 OHM 1/4W 5% R15,R23	RC07GF470J	2.000	EA	4					

PRINT PHANTOM ITEMS
PRINT COMPONENTS
PRINT PHANTOM/COMPONENT COMMENTS

PARENT ITEM 9301177 | CROSS REF ITEM | DESCRIPTION 70-3 MHZ MONO OBL COMV PCL-606 ENGR DRAW 2002824-2 X | BATCH QTY 1 EFFEC 8/20/84 | ITEM TYPE I UNIT MEAS EA | LOW LEVEL 03 PLANNER 450

BOM ITEM	LL CD	COMPONENT & CROSS REF.	DESCRIPTION & COMMENT	ENGINEERING DRAWING NUMBER		QUANTITY PER	ITEM UM	ITEM TYP	OPT NBR	FIRST OP SEQ	LT ADJ	EFFECTIVE DATES FROM	TO
46	04	4460036	RES 51 OHM 1/4W 5% R4,R26	RC07GF510J		2.000	EA	4					
48	05	4460655	RES 120 OHM 1/4W 5% R1	RC07GF121J		1.000	EA	4					
49	05	4460143	RES 1K OHM 1/4W 5% R19	RC07GF102J		1.000	EA	4					
50	05	4130035	FERRITE BEAD R23	K S 001 00/3B		1.000	EA	4					
52	04	2202299	COAX ASSY SMB/S-SMB PC/RT 8.25 J5,J6	24B1091-2	A	1.000	EA	4					
53	04	4020517	IDCTR MINI-RED .27 UH 5% L9	MR .27 5%		1.000	EA	4					
54	04	4020624	IDCTR 1.0 UH 5% MR 1.0 L8	MR 1.0 5%		1.000	EA	4					
55	04	4020525	IDCTR MINI-RED 1.2UH 5% L10	MR 1.2 5%		1.000	EA	4					
56	04	4020459	LNX/FU MINI-RED 10UH 5% L12	MR 10 / 5%		1.000	EA	4					
57	04	4020541	IDCTR MINI-RED .22 UH 5% L3	MR .22 5%		1.000	EA	4					
58	04	4020673	IDCTR MINI-RED 27UH 10% L11	MR 27 10%		1.000	EA	4					
59	04	4020566	IDCTR MINI-RED 5.6 UH 5% L13,L14,L15	MR 5.6 5%		3.000	EA	4					
60	04	4020574	IDCTR MINI-RED 6.8 UH 5% L16,L18	MR 6.8 5%		2.000	EA	4					
61	04	4020582	IDCTR MINI-RED .82 UH 5% L17	MR .82 5%		1.000	EA	4					
62	05	4460077	RES 220 OHM 1/4W 5% R27,R28	RC07GF221J		2.000	EA	4					
63	04	4050191	TOROID PC MOUNTING L4,L5,L6,L7	03-3011	C	4.000	EA	1					
64	06	4020467	FERROX CUBE 500 OHM L1,L2	VK200 10/3B		2.000	EA	4					
65	04	3250941	SKT 3 PIN FL1,FL2	1-583773-1		2.000	EA	4					
66	04	3090370	CONN 3 PIN E1	87224-3		1.000	EA	4					
67	04	3250917	MINI-JUMP E1	65474-001		1.000	EA	4					
68	05	3250370	SKT IC TO-5 8 PIN U2,U3	SD-5178		2.000	EA	4					
69	04	2062602	SHIELD MAGNETIC CYLIN PCL-606 L15	058283b	A0	1.000	EA	2					

PRINT PHANTOM ITEMS
PRINT COMPONENTS
PRINT PHANTOM/COMPONENT COMMENTS

PARENT ITEM 9301177 | CROSS REF ITEM | DESCRIPTION 70-3 MHZ MONO DBL COMV PCL-606 ENGR DRAW 20D2824-2 X | BATCH QTY 1 EFFEC 8/20/84 | ITEM TYPE 1 UNIT MEAS EA | LOW LEVEL 03 PLANNER 450

BOM ITEM	LL CD	COMPONENT & CROSS REF.	DESCRIPTION & COMMENT	ENGINEERING DRAWING NUMBER	QUANTITY PER	UM	ITEM TYP	OPT NBR	FIRST OP SEQ	LT ADJ	EFFECTIVE DATES FROM	TO
70	05	1050129	SCR BORH SLTD 4/40 X 1/4 SST	BINDER HEAD	2.000	EA	4					
71	05	1130491	WASHER, SST 5710-35-16 J2,J3,J4	5710-35-16	3.000	EA	4					
72	05	1310093	CLIP PCL-606	05C2882 B	16.000	EA	4					
74	04	3350279	FLTR CERAMIC SFE-10.7-MX2-A FL1,FL2	SFE-10.7-MX2-A	2.000	EA	4					

SECOND AND THIRD LOCAL OSCILLATOR

Schematic 91D7276
Parts List 20D2829

The Second and Third Local Oscillator module provides two local oscillator signals (80.7 MHz and 13.7 MHz) to the Double Converter module.

The Second Local Oscillator consists of crystal-controlled oscillator Q1 and crystal Y1, operating at 20.175 MHz. LO2 Frequency Adjust C10 can pull the crystal frequency by approximately ±5 kHz. The LO signal is buffered by Q2 and sent to first push-push frequency doubler U1 and associated circuitry. TP1 (buffer level) monitors the drive level to the first doubler and should indicate between +2 V and +5 V on a high impedance voltmeter. First Doubler Adjust L5 tunes the output of the first doubler, and the voltage at TP2 (First Doubler Level) should indicate between +2.3 V and +3.0 V.

The output of the First Doubler drives second push-push Frequency Doubler U2 and associated circuitry. Both frequency doublers use well balanced input transformers and tightly matched monolithic transistors, yielding excellent rejection of fundamental and odd order harmonics at their outputs.

LO2 Output Adjust L6 is used to tune the second doubler for maximum output at TP3 (LO2 Output Level). This voltage should be between +0.8 V and +1.2V. The output of the second local oscillator is applied to J2 at a level of +5 dBm to +10 dBm at a frequency of 80.7 MHz adjustable by ±20 kHz.

The third local oscillator consists of crystal-controlled oscillator Q3 and 13.7 MHz crystal Y2, followed by buffer amplifier Q4 and a 13.7 MHz low-pass filter. The LO3 output level at TP4 should be between +0.8 V and +1.2 V. The output signal appears at J3 at a level of +5 dBm to 10 dBm. Extremely low noise floors are achieved in both the second and third local oscillators by using the crystals as series resonant bandpass filters between the oscillators and their buffer amplifiers.

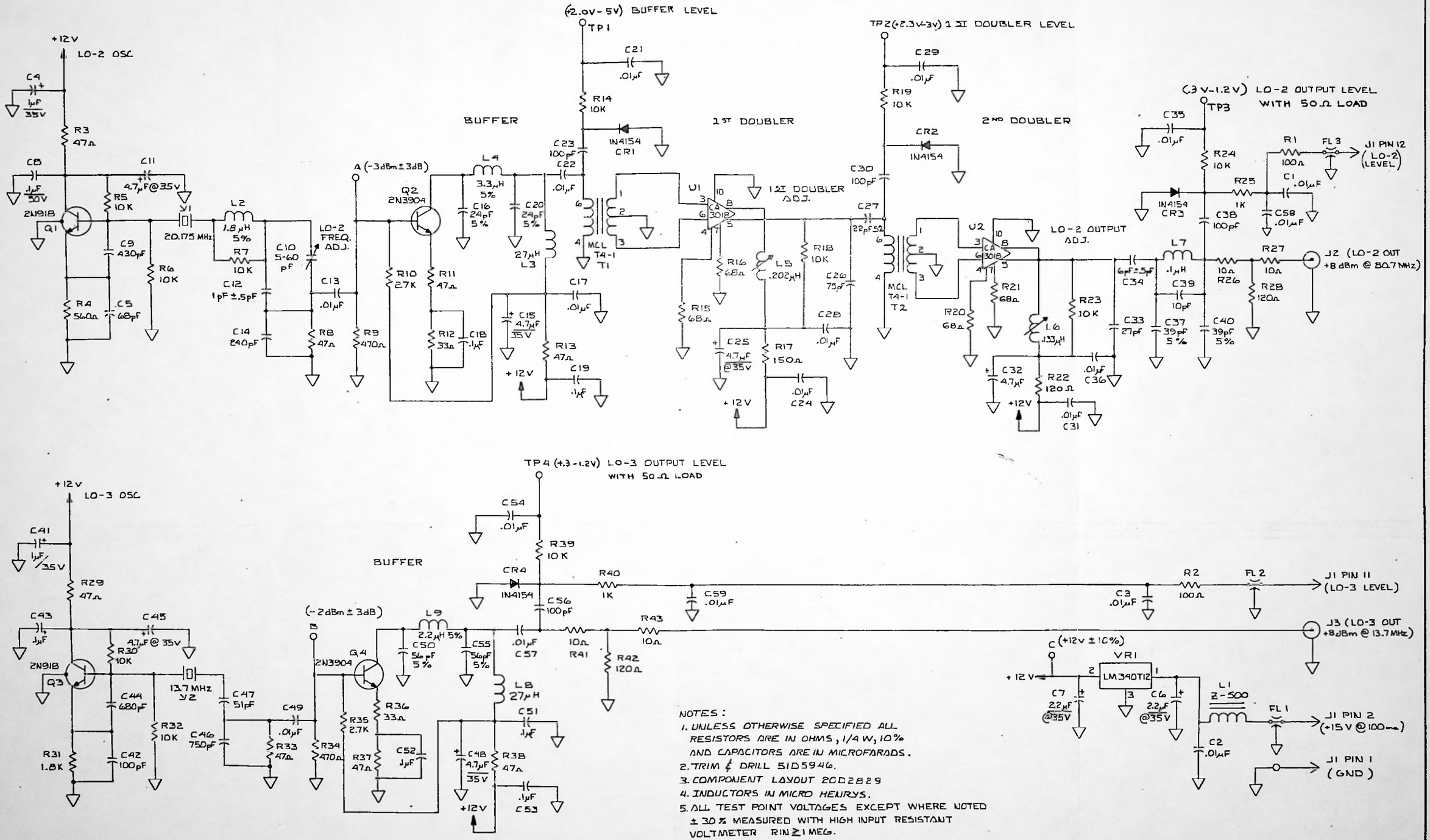

NOTES:

1. UNLESS OTHERWISE SPECIFIED ALL RESISTORS ARE IN OHMS, 1/4 W, 10% AND CAPACITORS ARE IN MICROFARADS.
2. TRIM & DRILL 51D5946.
3. COMPONENT LAYOUT 20D2829
4. INDUCTORS IN MICRO HENRYS.
5. ALL TEST POINT VOLTAGES EXCEPT WHERE NOTED ± 30% MEASURED WITH HIGH INPUT RESISTANT VOLTMETER RIN ≥ 1 MEG.

MOSELEY ASSOCIATES, INC.

80.7/13.7 2ND/3RD LO
PCL 606 SCHEMATIC

SCALE NONE

51D7276 F

51D7276

QTY	DESCRIPTION	REF DES	STOCK NO	ITEM
2	WASHER, SST, .016 THK, SEASTROM 5710-35-16		1130491	68
2	SCREW, BH 4-40 X 1/4 SST		1050129	67
4	TEST POINT WHITE SMITH 430101	TP1-TP4	3290152	66
2	SMB CONNECTOR APPLIED ENGINEERING 17-1246-0000	J2, J3	3090230	65
3	FEED THRU FILTER, AMP 859657-1	FL1-FL3	3291069	64
1	LOCKWASHER #6 SPLIT RING		1090588	63
1	NUT #6-32 THIN SERIES		1090554	62
1	SCREW #6-32 x 1/4 BH		1090182	61
1	SIL PAD BERQU 7403-09-FR-51	VR1	1290188	60
1	INDUCTOR Z500 FERROXCUBE VK 200 10/3B	L1	4020467	59
2	27 µH LNX/FUG MR-27 10%	L3, L8	4020673	58
1	.1 µH LNX/FUG MR-0.10 5%	L7	4020640	57
1	.133 µH COILCRAFT TYPE E SERIES 117 ORANGE 3½T	L6	4042073	56
1	.202 µH COILCRAFT TYPE E SERIES 117 GRN 5½T	L5	4042008	55
1	2.2 µH 5% LNX/FUG MR-2.2	L9	4020665	54
1	INDUCTOR 3.3 µH 5% LNX/FUG MR-3.3	L4	4020657	53
1	INDUCTOR 1.8 µH 5% LNX/FUG MR-1.8	L2	4020681	52
2	TRANSFORMER MCL T4-1	T1, T2	4100038	51
2	I.C. CA3018 RCA	U1, U2	3730041	50
1	REGULATOR LM3407-12 NATL	VR1	3650074	49
2	TRANSISTOR 2N3904 MOTOROLA	Q2, Q4	3630456	48
2	TRANSISTOR 2N918 NATL	Q1, Q3	3630001	47
0.1'	TEFLON TUBING #20 GAUGE	R2	1560226	46
1	CRYSTAL 13.7 MHZ 30A0081	Y2	3340767	45
1	CRYSTAL 20.175 MHZ 30A0080	Y1	3340759	44
1	CABLE ASSY 24B1087		2300838	43
1	RESISTOR 150Ω ¼W 10% AB RC07GF151K	R17	4410148	42
4	RESISTOR 68Ω 1/4W 10% AB RC07GF680K	R15, R16, R20, R21	4410106	41
1	560Ω 561K	R4	4410213	40
2	470Ω 471K	R9, R34	4410205	39
3	120Ω 121K	R28, R42, R22	4410130	38
2	100Ω 101K	R1, R2	4410122	37
8	47Ω 470K	R38, 11, 13, 24, 35, 37, 38	4410080	36
2	33Ω 330K	R12, R36	4410064	35
2	2.7K 272K	R10, R35	4410296	34
4	RESISTOR 10Ω 1/4W 10% AB RC07GF100K	R26, 27, 41, 43	4410023	33
11	RESISTOR 10K ¼W 10% A/B RC07GF103K	R3, 6, 7, 14, 16, 19, 23, 24, 30, 32, 39	4410379	32
1	RESISTOR 1.8K ¼W 10% A/B RC07GF182K	R31	4410270	31
2	RESISTOR 1K ¼W 10% A/B RC07GF102K	R25, R40	4410247	30
4	DIODE 1N4154 GE	CR1-CR4	3600145	29
2	CAPACITOR 1uf/35V 196D105X0035HAT SPRAG	C4, 41	4280038	28
1	1.0 pf ARCO DM-15-010D	C12	4210001	27
1	6 pf ± .5 pf CM05FD060D03	C34	4370367	26
1	5-60 pf SPRAGUE GXD60000	C10	4350500	25
6	4.7uf/35V 196D475X9035JAT SPRAGUE	C11, 15, 25, 32, 45, 48	4280053	24
2	2.2uf/35V 196D225X0035JAT SPRAGUE	C6, C7	4280046	23
2	39 pf 5% ARCO DM-15-390J	C37, C40	4210167	22
1	27 pf - 270J	C33	4210126	21
2	24 pf 5% - 240J	C16, C20	4210118	20
1	68 pf - 680J	C5	4210225	19
2	56 pf 5% - 560J	C50, C55	4210209	18
1	51 pf - 510J	C47	4210191	17
1	750 pf - 751J	C46	4210514	16
1	680 pf - 681J	C44	4210506	15
1	430 pf - 431J	C9	4210449	14
1	240 pf - 241J	C14	4210373	13
5	100 pf - 101J	C23, 30, 38, 42, 56	4210266	12
1	75 pf ARCO DM-15 - 750J	C26	4210233	11
1	22 pf 5% ARCO DM-15-220J	C27	4210100	10
1	10 pf ARCO DM-15-100D	C39	4210050	9
18	.01 µf/50V ERICOV 50D82A SORDIOUK C38 C59	C1-8, 13, 17, 21, 22, 24, 28, 29, 31, 34, 36, 44, 46	4310272	8
7	CAPACITOR .1 µf/50V ERICOV 50D104 SORDIOUZ	C51, 54, 18, 19, 43, 53, 55	4310264	7
16	MODULE CLIP 5C2882		1310093	6
4	SPRING SOCKET CAMB 450-3286-01-03		3250495	5
2	MODULE COVER 5C2868		2090975	4
1	FRAME BASE 5C2867		2090967	3
1	FRAME 5D2871		2091007	2
*	80.7/13.7 2ND/3RD LO BD 2002829		9301243	*
1	P.C. BOARD 5D5946 REV-12, -21		3473030	1

MOSELEY ASSOCIATES, INC.

COMPONENT LAYOUT
80.7/13.7 2ND/3RD LO

2002829 J

FM DEMODULATOR

Schematic 91D7260
Parts List 20D2811

The FM Demodulator module performs three major functions:

1. Extraction of baseband information from the frequency modulated input signal.

2. Generation of dc metering signal proportional to the logarithm of the input RF carrier over a three-decade range.

3. Generation of a mute signal to squelch the receiver when the RF input signal is too low for reliable operation.

FM Demodulator

The 3 MHz RF signal at J3 is fed to a low-noise amplifier, U4 and its associated circuitry, where it receives approximately 30 dB of voltage amplification. This signal passes through a 3 MHz phase linear bandpass filter (L8 through L10 with C83 and C84). The output of this filter drives a high-gain (60 dB) nonsaturating symmetrical limiting amplifier U6. The amplitude-limited signal is then fed to a precision charge count FM detector to extract the baseband information.

The FM detector operates as follows: Q15, Q16 and Q18 form a differential amplifier with Q13 and Q14 serving as constant-current collector loads. This amplifier has a gain in excess of 30 dB. Q10 and Q17 in conjunction with diodes CR15 through CR17 form low-noise voltage clamps to ensure nonsaturating action of the differential amplifier transistors. The current outputs of the differential amplifier alternately charge C62 and C63 through diodes CR12 and CR13. These capacitors are then alternately discharged through Q11 and Q12, the total current being proportional to the signal frequency. Q11 and Q12 serve as current to voltage converters whose outputs are combined and integrated in a 500 kHz low-pass filter (L4 and L5 and associated circuitry) The output from this filter contains the baseband information.

A two-stage low-noise amplifier (U5 and U1) then amplifies the baseband signal to a useful system level. Baseband Level Adjust R10 is set to deliver a 3.5 V p-p signal at J2 for an FM signal with 50 kHz deviation. This FM detector is inherently wideband, linear, and adjustment free.

RF Signal Strength Detector (Log Amplifier)

The RF signal from U4 is also sent to a four-stage successive limiting differential amplifier (Q2 through Q9) through a simple bandpass filter (L3 and C42). Each stage of this amplifier drives an amplitude detector (CR7 through CR10), which in conjunction with the summing amplifier U3 produces a dc metering signal at J1-9 that is proportional to the logarithm of the RF input level over three decades of amplitude. This voltage is used to indicate RF signal strength over the range of 3 microvolts to 3000 microvolts on the front panel meter. LOG GAIN control R67 is used to establish the linearity of the signal sent to the Metering and Status module.

Mute Logic

The RF signal strength voltage from the log amplifier is also sent to comparator U2, which compares this level to a preset reference voltage established by MUTE Threshold Adjust R22. Decreasing this reference voltage decreases the signal strength required to initiate the mute condition. Whenever the logic circuitry is in the mute condition, MUTE Threshold indicator CR6 will glow red. A 2 dB hysteresis is built into the mute logic to eliminate "chattering" near the mute threshold. Also network CR3, CR4, R16, R17, and C10 provide a fast-attack, slow-release (1 ms and 1.5 seconds respectively) to and from the mute mode to eliminate "thumps". The mute signal is brought out on J1-10 and J1-11.

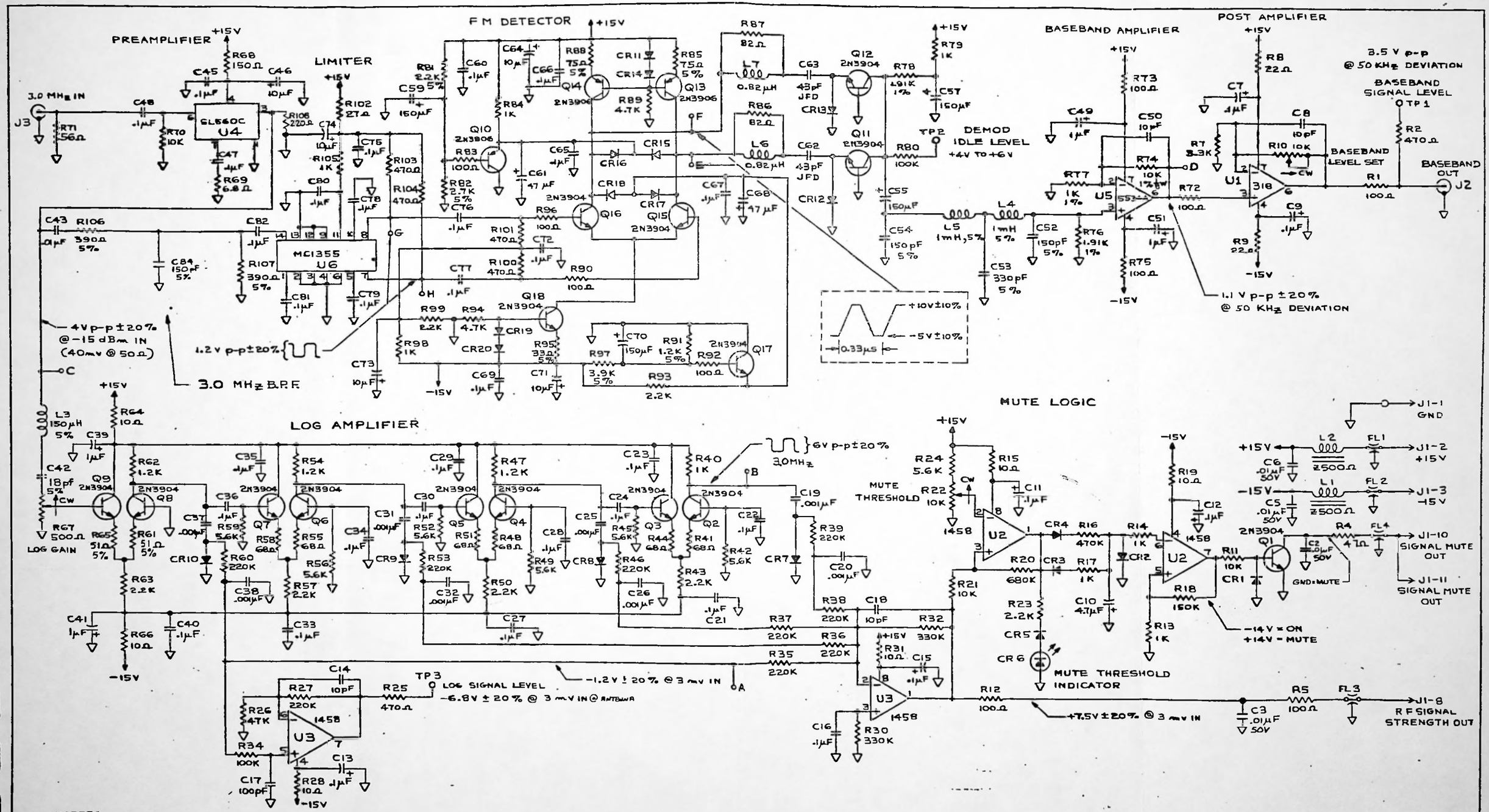

NOTES:

1. UNLESS OTHERWISE SPECIFIED, RESISTORS ARE IN OHMS, 1/4 W, 10%
   CAPACITORS ARE IN MICROFARADS
   DIODES ARE 1N4154
2. P C BOARD 51D5926
3. COMPONENT LAYOUT 20D2811
4. POINTS "A" THRU "H" ARE DIAGNOSTIC TEST POINTS

FOR USE @ 3.0 MHz USED ON: PCL-606

MOBILEY ASSOCIATES, INC.

SCHEMATIC—FM DEMOD, METER AMP & MUTE

91D7260 G

91D7260

QTY	DESCRIPTION	REF. DES.	STOCK NO.	ITEM NO.
2	RES., A.B. RC07GF510J 51Ω 1/4W 5%	R61, R65	4460036	82
2	WASHER, SST .016THK SEASTROM #110-SC-14		1130491	81
*	FM DEMOD ASSY, MAI 20D2811		9301284	*
4	FEED THRU FILTER, AMP B596ST-1	FL1 – FL4	3291069	80
1	RES. A.B. RC07GF 560K 56Ω 1/4W 10%	R71	4410098	79
1	" " 470K 47Ω 1/4W 10%	R4	4410080	78
16	MODULE CLIP 5C2882		1310093	77
2	MODULE COVER 5C2868		2090975	76
2	RES., A.B. RC07GF 820K, 82Ω 1/4W 10%	R86, R87	4410114	75
2	SCREW BH 4-40X 1/4 SST		1050129	74
1	FRAME 5D2869		2090983	73
1	FRAME BASE 5C2867		2090967	72
1	RES. MEPCO RN55C1002F 10K 1/8W 1%	R74	4510145	71
1	" IRC RN60D1001F 1.00K 1/4W 1%	R77	4520037	70
2	" DALE RN60D1911F 1.91K 1/4W 1%	R76, R78	4520250	69
2	" A.B. RC07GF 750J 75Ω " 5%	R85, 88	4460648	68
1	" " " 684K 680K " 10%	R20	4410593	67
6	" " " 680K 68Ω " 10%	R44,47,48,51,55,58	4410106	66
7	" " " 562K 5.6K " 10%	R33,42,43,49,52,56,59	4410346	65
1	" " " 474K 470K " 10%	R16	4410577	64
1	" " " 473K 47K " 10%	R26	4410452	63
2	" " " 472K 4.7K " 10%	R89,94	4410338	62
6	" " " 471K 470Ω " 10%	R2,25,100,101,103,104	4410205	61
1	" " " 332K 3.3K " 10%	R7	4410304	60
2	" " " 391J 390Ω " 5%	R106,107	4460101	59
2	" " " 334K 330K " 10%	R30,32	4410551	58
1	" " " 392J 3.9K " 5%	R97	4460697	57
1	" " " 330J 33Ω " 5%	R95	4460614	56
9	" " " 224K 220K " 10%	R27,35-39,46,53,60	4410536	55
1	" " " 272J 2.7K " 5%	R82	4460200	54
8	" " " 222J 2.2K " 5%	R23,43,50,57,63,81,91,99	4460192	53
1	" " " 270K 27Ω " 10%	R102	4410056	52
2	" " " 220K 22Ω " 10%	R8,9	4410049	51
1	" " " 6R8K 6.8Ω " 10%	R69	4410726	50
1	" " " 154K 150K " 10%	R18	4410510	49
2	" " " 104K 100K " 10%	R34,80	4410494	48
3	" " " 103K 10K " 10%	R11,21,70	4410379	47
4	" " " 122J 1.2K " 5%	R47,54,62,91	4460630	46
8	" " " 102K 1K " 10%	R13,14,17,40,78,98,103,84	4410247	45
1	" " " 151K 150Ω " 10%	R68	4410148	44
10	" " " 101K 100Ω " 10%	R1,5,12,30,33,36,72,73,78,83	4410122	43
6	" " " 100K 10Ω " 10%	R15,19,28,64,66,31	4410023	42
2	CONN. SMB RT ANGLE BULKHEAD JACK A.P.D. 17-18846.000	J2,J3	3090230	41
1	I.C. SOCKET AMP 640357-1 14PIN DIP	U6	3250024	40
4	I.C. SOCKET AMP 640143-1 8PIN DIP	U1,2,3,5	3250016	39
.2'	BUS WIRE, ALPHA 298 #22	L8, T1	1641927	87
1	CAP., ARCO 301BEMS0R0103K .01/30V	C43	4310272	86
2	CAP., SPRAGUE 196D476X0020R4 EPOXY-DIP 47μF 20V	C61, 68	4280137	85
1	RES. A.B. RC07GF221K 220Ω 1/4W 10%	R108	4410163	84
.5'	TUBING, ALPHA 200-20 TEFLON #20	L1, L2, R4, R5, L8	1560226	83
1	I.C. SOCKET ROBINSON NUGENT 8-DIP 8 PIN ROUND TO-5	U4	3250370	38
3	TESTPOINT SMITH AJ10-101 WHITE TEST JACK RIGHT ANGLE	TP 1, 2, 3	3290152	37
1	HEAT SINK THERMALLOY 1115B TO 5 PUSH-ON	U4	2110237	36
1	CABLE ASSY, 24 B 1088		2300846	35
2	SHIELD, MAGNETIC, CYLINDRICAL MAI 5D2346	L4, L5	2062412	34
4	CAP. SPRAGUE 196D105X0015 TEN 150μF/15V	C55,57,59,70	4280178	33
5	CAP. SPRAGUE 196D106X0025 MAI 10μF/25V	C46,64,71,73,74	4280079	32
1	CAP. SPRAGUE 196D475X9035 UNI 20% 4.7μF/35V	C10	4280053	31
4	CAP SPRAGUE 196D105X0035 MAI 1μF/35V	C39, 41, 49, 51	4280038	30
37	CAP. ERIE 5020 SERIES .1μF/50V	C1, 2, 21-24, 27-30, 33-36, 43, 45, 47, 48, 65, 67, 68, 69, 72, 75-82, 7, 9, 11, 12, 13, 15	4310264	29
4	CAP. CRL UK-50-103 DISC .01/50V	C2, 3, 5, 6	4310132	28
8	CAP. CRL DD-102G CERDISC .001μF/1KV	C19,20,25,26,31,32,37,38	4310108	27
2	CAP. JFD UY01-430J GL 43PF	C62, C63	4240149	26
				25
1	" " " DM-15-331J 330PF	C53	4210415	24
3	" " " DM-15-151J 150PF	C52,54,84	4210308	23
1	" " " DM-15-101J 100PF	C17	4210266	22
1	" " " DM-15-180J 18PF	C42	4210084	21
4	CAP. ARCO MICA DIP DM-15-100D 10PF	C8,14,18,50	4210050	20
1	POT. BOURNES 3006P-1-501 500Ω 11 LEAD SPACING	R67	4630679	19
2	POT. BOURNES 3006P-1-103 10K 11 LEAD SPACING	R10, R22	4630299	18
				17
				16
				15
2	INDUCTOR MILLER 9230-18 .82μH	L6, L7	4020178	14
2	INDUCTOR LNX/FU MR-1000 1.07MH 5%	L4, L5	4020475	13
1	INDUCTOR LNX/FU MR-150 150μH 5%	L3	4020483	12
2	INDUCTOR FERROXCUBE NO: TX200 10738 #800Ω	L1, L2	4020467	11
3	TRANSISTOR MOTOR 2N3906	Q10, 13, 14	3630464	10
15	TRANSISTOR MOTOR. 2N3904	Q1-9, 11, 12, 15-18	3630456	9
1	L.E.D. DIALIGHT 550-0406 RED	CR6	3390549	8
19	DIODE G.E. 1N4154	CR1-5, 7-20	3600145	7
1	I.C. MOTOR. MC1355P FM/IF AMP	U6	3730348	6
1	I.C. SIGN. NE 5534AN LO NOISE OP AMP	U5	3730728	5
1	I.C. PLES. SL560	U4	3730769	4
2	I.C. NATL. LM1458N DUAL OP AMP	U2, U3	3730215	3
1	I.C. NATL. LM318N HI SPEED OP AMP	U1	3730173	2
1	P.C. BOARD FM DEMOD 5ID5926 REV-13,-22		3473071	1

MOSELEY ASSOCIATES, INC.
SANTA BARBARA RESEARCH PARK
GOLETA, CALIFORNIA

COMPONENT LAYOUT
F.M. DEMOD

SCALE 2X

20D2811 L

COMPOSITE BASEBAND PROCESSOR

Schematic 91D7263
Parts List 20D2812

The Composite Baseband Processor module performs three main functions:

1. Divides the input baseband signal into separate composite program and subcarrier channels.

2. Applies high-frequency response correction to the baseband signals to compensate for the high-frequency roll-off caused by the 10.7 MHz IF filters.

3. Mutes the program and subcarrier outputs when commanded by the Mute and Transfer module.

The 3.5 V p-p baseband signal from the FM Demodulator module enters the Composite Baseband Processor through J2. It first passes through a low-pass filter (consisting of inductors L4 through L7 and capacitors C7 through C11) to attenuate high-frequency adjacent channel signals which otherwise might cause slew rate limiting in the following stages.

The filtered output is passed to mute switch U6, which consists of series-shunt FET switches. A +5 V control voltage at J1 pin 11 or 12 causes control logic U1 to drive the mute switch into the mute state. Control voltages less than +0.6 V allow the mute switch to pass the baseband signal to buffer amplifier U7.

The output of U7 feeds high-frequency correction amplifier U2. This amplifier adds a controlled boost to frequencies between 20 kHz and 80 kHz to compensate for the attenuation of the composite high-frequency response caused by the 10.7 MHz IF bandpass filters. HF TILT adjustment R10 is used to set the amount of high-frequency boost. The output of U2 is split and routed to both the composite and multiplex amplifier channels.

Signal flow through the composite channel begins with low-frequency gain correction amplifier U8. This circuit compensates for low-frequency response deficiencies in older stereo generators and FM exciters. LF TILT adjustment R18 sets the amount of boost or cut for frequencies below 30 Hz; it is normally set for flat response.

The output of U8 is passed through an 80 kHz (standard), or 100 kHz (optional) low-pass filter to remove any high-frequency subcarriers, noise or spurious signals which could degrade the performance of FM stereo reception if allowed to enter an FM exciter. The output of this filter (L11 through L13, C21, and C48 through C53) is buffered by amplifier U3.

The output signal of U3 is passed to the composite delay equalizer circuit to compensate for group delay variations in the 80 kHz 100 kHz) low-pass filter. U9 and associated circuitry form a second-order all-pass network. Amplifiers U10, U11, and their circuitry form a stable synthesized inductor which is used in the all-pass network. Delay Equalizer adjustment R25 controls the magnitude of the group delay compensation applied. When properly adjusted, stereo separation will exceed 48 dB from 30 Hz to 15 kHz. The signal from U9 is passed through a dc decoupling network to composite output connector J4. Also, the signal from U9 is decoupled and sent to TP1 and J1 pin 7 for test and front panel meter level indications. The nominal output levels at these points are 3.5 V p-p for 100% modulation.

Signal flow through the MUX channel begins with the output of U2 driving the 80 kHz (100 kHz) MUX high-pass filter (L8 and L9, and C26 through C30), which attenuates the composite stereo signal and passes the MUX subcarriers. MUX amplifier U4 then amplifies the subcarriers to a useful signal level. MUX Level adjustment R31 is used to set the gain of this amplifier.

The output of U4 is passed through the 200 kHz MUX low-pass filter (L10, C34, and C35) to attenuate any high-frequency noise. This filter exhibits a high-frequency rise in passband response between 80 kHz and 200 kHz to compensate for the subcarrier amplitude roll-off caused by the 10.7 MHz IF bandpass filters. The output from this filter is then buffered by amplifier U5. The output of U5 is sent to MUX output connector J3. The output of U5 is also routed to TP2 and J1 pin 10 for test and front panel meter level indications. The nominal MUX output levels at these points are 1.5 V p-p and 2.25 V p-p for 110 kHz and 185 kHz MUX signals, which deviate the main carrier 5 kHz and 7.5 kHz respectively.

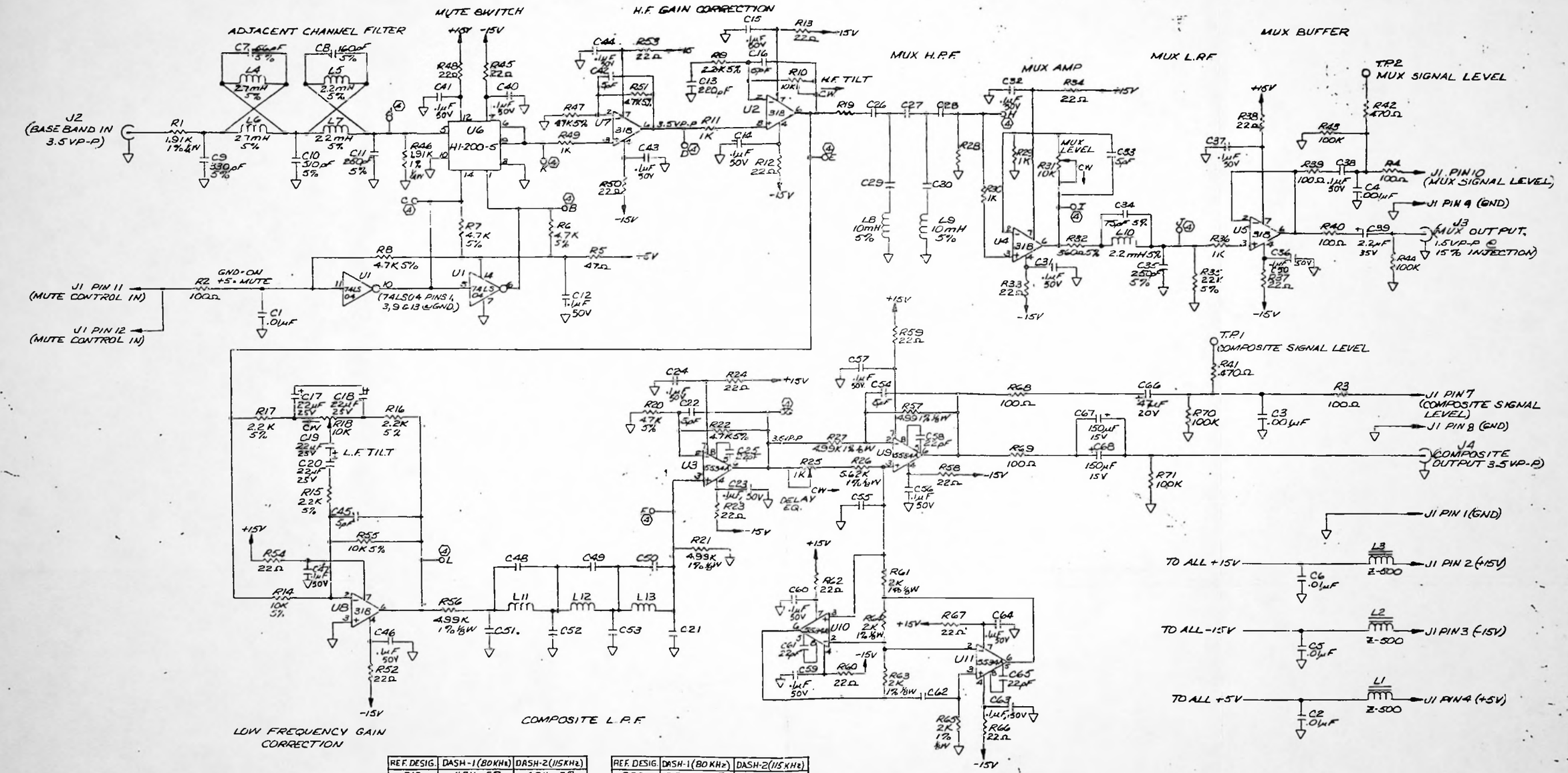

REF. DESIG.	DASH-1 (80KHz)	DASH-2 (115KHz)
R19	4.7K 5%	6.2K 5%
R28	4.7K "	6.2K "
C21	330PF "	20PF "
C26	270PF "	150PF "
C27	200PF "	110PF "
C28	330PF "	180PF "
C29	2200PF "	1200PF "
C30	910PF "	510PF "
C48	68PF "	51PF "
C49	360PF "	270PF "

REF. DESIG.	DASH-1 (80KHz)	DASH-2 (115KHz)
C50	250PF 5%	180PF 5%
C51	430PF "	330PF "
C52	560PF "	430PF "
C53	500PF "	360PF "
C55	330PF "	240PF "
C62	8200PF "	6200PF "
L11	11.2MH 1400-129	7.9MH 1400-170
L12	6.9MH 1400-097	5MH 1400-172
L13	7.6MH 1400-165	5.5MH 1400-171

NOTES:
1. UNLESS OTHERWISE SPECIFIED, RESISTOR VALUES ARE IN OHMS, ¼W 10%. CAPACITOR VALUES ARE IN MICROFARADS
2. P.C. BOARD 51D5929.
3. COMPONENT LAYOUT 20D2812
4. POINTS WITH LETTER DESIGNATIONS "A" THRU "L" ARE DIAGNOSTIC TEST POINTS.

USED ON: PCL-606

MOSELEY ASSOCIATES, INC.
COMPOSITE BASEBAND PROCESSOR
9107 3 D

PRINT PHANTOM ITEMS
PRINT COMPONENTS
PRINT PHANTOM/COMPONENT COMMENTS

PARENT ITEM	CROSS REF ITEM	DESCRIPTION	BATCH QTY	ITEM TYPE	LOW LEVEL
9301292		ASSY, BASEBAND PROC 80KHZ 606 ENGR DRAW 2002812-1 J	1 EFFEC 8/14/84	I UNIT MEAS EA	03 PLANNER 440

BOM ITEM	LL CO	COMPONENT & CROSS REF.	DESCRIPTION & COMMENT	ENGINEERING DRAWING NUMBER	QUANTITY PER	UM	ITEM TYP	OPT NBR	FIRST OP SEQ	LT ADJ	EFFECTIVE DATES FROM	TO
1	04	9301920	ASSY, BASEBAND PROC NEUTER 606	2002812-3 J	1.000	EA	1					
24	05	4460242	RES 4.7K OHM 1/4W 5% R19,R28	RC07GF472J	2.000	EA	4					
45	05	4210340	CAP MICA DIP 200PF C27	DM-15-201J	1.000	EA	4					
47	05	4210381	CAP MICA DIP 250PF C50	DM-15-251J	1.000	EA	4					
48	05	4210399	CAP MICA DIP 270PF C26	DM-15-271J	1.000	EA	4					
49	06	4220133	CAP MICA DIP 2200PF 1% C29	DM-19-222F	1.000	EA	4					
50	05	4210415	CAP MICA DIP 330PF C21,C28,C55	DM-15-331J	3.000	EA	4					
51	04	4210423	CAP MICA DIP 360PF C49	DM-15-361J	1.000	EA	4					
52	04	4210449	CAP MICA DIP 430PF C51	DM-15-431J	1.000	EA	4					
54	05	4210464	CAP MICA DIP 500PF C53	DM-15-501J	1.000	EA	4					
56	05	4210480	CAP MICA DIP 560PF C52	DM-15-561J	1.000	EA	4					
57	04	4210225	CAP MICA DIP 68PF C48	DM-15-680J	1.000	EA	4					
59	04	4220232	CAP MICA DIP 8200PF 5% C62	DM-19-822J	1.000	EA	4					
60	06	4210548	CAP MICA DIP 910PF C30	DM-15-911J	1.000	EA	4					
68	04	4041984	IOCTR 6.9MH L12	02C1400-097 D	1.000	EA	1					
69	04	4041422	ASSY, 7.510MH CUP CORE COIL L13	02C1400-165 D	1.000	EA	1					
70	05	4041109	ASSY, 10.71MH CUP CORE COIL L11	02C1400-129 D	1.000	EA	1					

PRINT PHANTOM ITEMS
PRINT COMPONENTS
PRINT PHANTOM/COMPONENT COMMENTS

PARENT ITEM	CROSS REF ITEM	DESCRIPTION	BATCH QTY	ITEM TYPE	LOW LEVEL
9301912		ASSY, BASEBAND PROC 115KHZ 606	1	I	03
		ENGR DRAW 2002812-2 J	EFFEC 8/14/84	UNIT MEAS EA	PLANNER 440

BOM ITEM	LL CD	COMPONENT & CROSS REF.	DESCRIPTION & COMMENT	ENGINEERING DRAWING NUMBER	QUANTITY PER	UM	ITEM TYP	OPT NBR	FIRST OP SEQ	LT ADJ	EFFECTIVE DATES FROM	TO
1	04	9301920	ASSY, BASEBAND PROC NEUTER 606	2002812-3 J	1.000	EA	1					
2	04	4460267	RES 6.2K OHM 1/4W 5% R19,R28	RC07GF622J	2.000	EA	4					
3	05	4210092	CAP MICA DIP 20PF C21	DM-15-200J	1.000	EA	4					
4	06	4210308	CAP MICA DIP 150PF C26	DM-15-151J	1.000	EA	4					
5	04	4210274	CAP MICA DIP 110PF C27	DM-15-111J	1.000	EA	4					
6	04	4210324	CAP MICA DIP 180PF C28,C50	DM-15-181J	2.000	EA	4					
7	05	4220042	CAP MICA DIP 1200PF C29	DM-19-122J	1.000	EA	4					
8	05	4210472	CAP MICA DIP 510PF C30	DM-15-511J	1.000	EA	4					
9	04	4210191	CAP MICA DIP 51PF C48	DM-15-510J	1.000	EA	4					
10	05	4210399	CAP MICA DIP 270PF C49	DM-15-271J	1.000	EA	4					
11	05	4210415	CAP MICA DIP 330PF C51	DM-15-331J	1.000	EA	4					
12	04	4210449	CAP MICA DIP 430PF C52	DM-15-431J	1.000	EA	4					
13	04	4210423	CAP MICA DIP 360PF C53	DM-15-361J	1.000	EA	4					
14	05	4210373	CAP MICA DIP 240PF C55	DM-15-241J	1.000	EA	4					
15	04	4220257	CAP MICA DIP 6200PF 5% C62	DM-19-622J	1.000	EA	4					
16	04	4042115	ASSY,7.90MH CUP CORE COIL L11	02C1400-170 D	1.000	EA	1					
17	04	4042123	ASSY,5.50MH CUP CORE COIL L13	02C1400-171 D	1.000	EA	1					
18	04	4042131	ASSY,5.00MH CUP CORE COIL L12	02C1400-172 D	1.000	EA	1					

PRINT PHANTOM ITEMS
PRINT COMPONENTS
PRINT PHANTOM/COMPONENT COMMENTS

PARENT ITEM	CROSS REF ITEM	DESCRIPTION	BATCH QTY	ITEM TYPE	LOW LEVEL
9301920		ASSY, BASEBAND PROC NEUTER 606	1	I	04
		ENGR DRAW 2002812-3 J	EFFEC 8/14/84	UNIT MEAS EA	PLANNER 440

BOM ITEM	LL CD	COMPONENT & CROSS REF.	DESCRIPTION & COMMENT	ENGINEERING DRAWING NUMBER	QUANTITY PER	UM	ITEM TYP	OPT NBR	FIRST OP SEQ	LT ADJ	EFFECTIVE DATES FROM	TO
1	05	3473089	PCB COMP BASE BAND PROC PCL606	5105929 E	1.000	EA	9					
3	05	3730934	IC HI-200-5 U6	HI-200-5	1.000	EA	4					
4	06	3730173	IC LM318N OPAMP HISPEED U2,U4,U5,U7,U8	LM-318N	5.000	EA	4					
5	06	3730728	IC NE5534AN OPAMP LO NOISE U3,U9,U10,U11	NE-5534AN	4.000	EA	4					
6	05	3660685	IC SN74LS04N HX INV U1	SN74LS04N	1.000	EA	4					
8	06	3250024	SKT DUAL IN LINE 14 PIN U1,U6	640357-1	2.000	EA	4					
9	06	3250016	SKT DUAL IN LINE 8 PIN U2,U3,U4,U5,U7,U8,U9,U10,U11	640463-1	9.000	EA	4					
10	05	1130491	WASHER, SST 5710-35-16	5710-35-16	3.000	EA	4					
13	06	4410122	RES 100 OHM 1/4W 10% R2,R3,R4,R39,R40,R68,R69	RC07GF101K	7.000	EA	4					
14	06	4410247	RES 1K OHM 1/4W 10% R11,R29,R30,R36,R49	RC07GF102K	5.000	EA	4					
16	05	4460317	RES 10K OHM 1/4W 5% R14,R55	RC07GF103J	2.000	EA	4					
17	06	4410049	RES 22 OHM 1/4W 10% R12,R13,R23,R24,R33,R34,R37,R38,R45,R48,R50,R52, R53,R54,R58,R59,R60,R62,R66,R67	RC07GF220K	20.000	EA	4					
19	05	4460192	RES 2.2K OHM 1/4W 5% R9,R15,R16,R17	RC07GF222J	4.000	EA	4					
20	05	4460374	RES 22K OHM 1/4W 5% R35	RC07GF223J	1.000	EA	4					
21	05	4460580	RES 360 OHM 1/4W 5% R32	RC07GF361J	1.000	EA	4					
22	05	4410080	RES 47 OHM 1/4W 10% R5	RC07GF470K	1.000	EA	4					
23	06	4410205	RES 470 OHM 1/4W 10% R41,R42	RC07GF471K	2.000	EA	4					
24	05	4460242	RES 4.7K OHM 1/4W 5% R6,R7,R8,R20,R22,R47,R51	RC07GF472J	7.000	EA	4					
25	06	4410494	RES 100K OHM 1/4W 10% R43,R44,R70,R71	RC07GF104K	4.000	EA	4					
26	05	4520250	RES 1.91K OHM 1/4W 1% R1,R46	RN60D1911F	2.000	EA	4					
27	05	4510293	RES 2.00K OHM 1/8W 1% R61,R63,R64,R65	RN55C2001F	4.000	EA	4					
28	05	4510103	RES 4.99K OHM 1/8W 1% R21,R27,R56,R57	RN55E4991F	4.000	EA	4					

PRINT PHANTOM ITEMS
PRINT COMPONENTS
PRINT PHANTOM/COMPONENT COMMENTS

PARENT ITEM	CROSS REF ITEM	DESCRIPTION	BATCH QTY	ITEM TYPE	LOW LEVEL
9301920		ASSY, BASEBAND PROC NEUTER 606	1	L	04
		ENGR DRAW 2002812-3 J	EFFEC 8/14/84	UNIT MEAS EA	PLANNER 440

BOM ITEM	LL CD	COMPONENT & CROSS REF.	DESCRIPTION & COMMENT	ENGINEERING DRAWING NUMBER	QUANTITY PER	UM	ITEM TYP	OPT NBR	FIRST OP SEQ	LT ADJ	EFFECTIVE DATES FROM	TO
29	06	4510111	RES 5.62K OHM 1/8W 1% R26	RN55C5621F	1.000	EA	4					
31	05	4630075	POT CER PC PIN 1K OHM .75W 15T R25	3006P-1-102	1.000	EA	4					
32	05	4630299	POT CER PC PIN 10K OHM .75W R10,R18,R31	3006P-1-103	3.000	EA	4					
35	06	4310264	CAP .1 50V 1042 C12,C14,C15,C23,C24,C31,C32,C36,C37,C38,C40,C41, C43,C44,C46,C47,C56,C57,C59,C60,C63,C64	5020ES50RD104	22.000	EA	4					
37	06	4280046	CAP EPOX-DIP 2.2/35V 20% C39	1960225X0035JAI	1.000	EA	4					
38	05	4280095	CAP EPOX-DIP 22/35V C17,C18,C19,C20	1960226X9035PE4	4.000	EA	4					
39	05	4280178	CAP EPOX-DIP 150/15V C67,C68	1960157X0015TE4	2.000	EA	4					
40	06	4280137	CAP EPOX-DIP 47/20V C66	1960476X0020PE4	1.000	EA	4					
41	05	4310108	CAP CER DISC .001/1KV C3,C4	DD-102G	2.000	EA	4					
42	05	4310140	CAP DISC .01/100V C1,C2,C5,C6	TG-S10	4.000	EA	4					
43	06	4210316	CAP MICA DIP 160PF C8	DM-15-161J	1.000	EA	4					
44	06	4210100	CAP MICA DIP 22PF C25,C58,C61,C65	DM-15-220J	4.000	EA	4					
46	05	4210357	CAP MICA DIP 220PF C13	DM-15-221J	1.000	EA	4					
47	05	4210381	CAP MICA DIP 250PF C11,C35	DM-15-251J	2.000	EA	4					
50	05	4210415	CAP MICA DIP 330PF C9	DM-15-331J	1.000	EA	4					
53	06	4210043	CAP MICA DIP 5PF C16,C22,C33,C42,C45,C54	DM-15-050D	6.000	EA	4					
55	05	4210472	CAP MICA DIP 510PF C10	DM-15-511J	1.000	EA	4					
58	05	4210233	CAP MICA DIP 75PF C34	DM-15-750J	1.000	EA	4					
61	05	4210209	CAP MICA DIP 56PF C7	DM-15-560J	1.000	EA	4					
64	06	4020467	FERROX CUBE 500 OHM L1,L2,L3	VK200 10/3B	3.000	EA	4					
65	05	4020038	IDCTR MINI-RED 2.2 MH 5% L5,L7,L10	MR 2200 5%	3.000	EA	4					
66	05	4020491	IDCTR 2.7MH 5% L4,L6	MR 2700 5%	2.000	EA	4					

PRINT PHANTOM ITEMS
PRINT COMPONENTS
PRINT PHANTOM/COMPONENT COMMENTS

PARENT ITEM 9301920 | CROSS REF ITEM | DESCRIPTION ASSY, BASEBAND PROC NEUTER 606 ENGR DRAW 2002812-3 J | BATCH QTY 1 EFFEC 8/14/84 | ITEM TYPE 1 UNIT MEAS EA | LOW LEVEL 04 PLANNER 440

BCM ITEM	LL CO	COMPONENT & CROSS REF.	DESCRIPTION & COMMENT	ENGINEERING DRAWING NUMBER		QUANTITY PER	UM	ITEM TYP	OPT NBR	FIRST OP SEQ	LT ADJ	EFFECTIVE DATES FROM	TO
67	05	4020061	IOCTR MINI-RED 10 MH 5% L8,L9	MR 10.000 5%		2.000	EA	4					
71	05	1050129	SCR BORH SLTD 4/40 X 1/4 SST	BINDER HEAD		2.000	EA	4					
72	05	1310093	CLIP PCL-606	05C2882	B	16.000	EA	4					
73	06	3090222	CONN EDGE 12PIN J1	1-87233-2		1.000	EA	4					
74	05	3090230	CONN MALE RT ANGLE PC SNAP ON J2,J3,J4	17-1246-000		3.000	EA	4					
76	06	2090975	COVER, MODULE PCL 606	05C2868	C	2.000	EA	2					
77	06	3290152	TEST JACK WHITE R ANGLE TP1,TP2	430-101		2.000	EA	4					
78	05	2090967	FRAME BASE, MODULE PCL 606	05C2867	C	1.000	EA	2					
79	05	2091023	FRAME B. B. PROC PCL 606 RCVR	0502873	E	1.000	EA	2					

METERING AND STATUS

Schematic 91D7264
Parts List 20D2818-1

The receiver Metering and Status board includes three main sections:

1. Eight separate metering functions
2. Power supply and operating status indicators
3. OPERATE/TRANSFER switch

Metering Functions

Potentiometers R1 through R8 are used as input adjustments. Resistors R31 through R38 have been selected to increase the allowable input voltage. The values selected are explained in note 4 on the schematic.

U4 acts as a switch to select one of the eight metering channels. The selected channel is based on a binary code produced by U3, which is an up/down counter. U2 is incremented and decremented by METER FUNCTION switch S1, U3, and associated circuitry.

U1 decodes the output of the counter and, by activating one of eight LEDs, indicates the position selected.

The output of U4 (the multiplex switch) is buffered and amplified by U7. The output of this buffer is used by half of U5 to indicate the polarity of the input signal (red equals plus, and green equals minus). The output of U7 also drives the absolute value amplifier.

Figure P-1 is a simplified diagram of the absolute value amplifier. It is included to show the difference in gain between a negative and positive input. The values shown in parentheses are for a typical full-scale input. CR16 and C38 (not shown) provide peak detection of ac waveforms. The output of the absolute amplifier is connected through the harness to an output terminal on the back panel of the receiver and to U5, the meter ballistics amplifier.

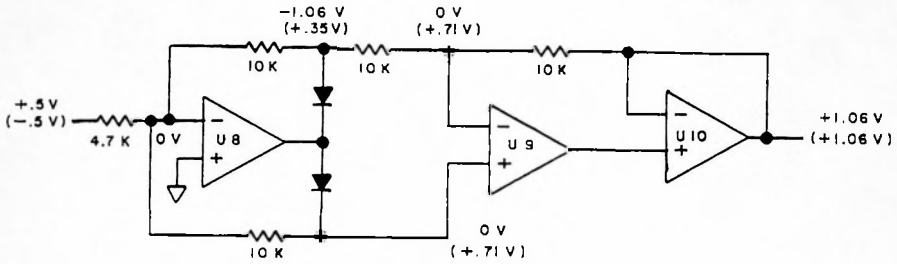

Figure P-1. Simplified diagram of absolute value amplifier.

U5 acts as an attenuator and meter acceleration amplifier. R9 is used to adjust the meter ballistics response. The output of this circuit is connected to the meter through J1.

Status Indicators

LEDs CR22 through CR24 are used to indicate the status of the power supplies. CR17 and CR18 indicate the status of the receiver. U11 is used as a TTL threshold detector. R97 and R101 set the threshold at approximately 2 volts referred to the input. U12 and associated circuitry are not presently used.

Control Switch

OPERATE/TRANSFER switch S2 is a double-pole, double-throw switch used to activate logic circuits within the receiver.

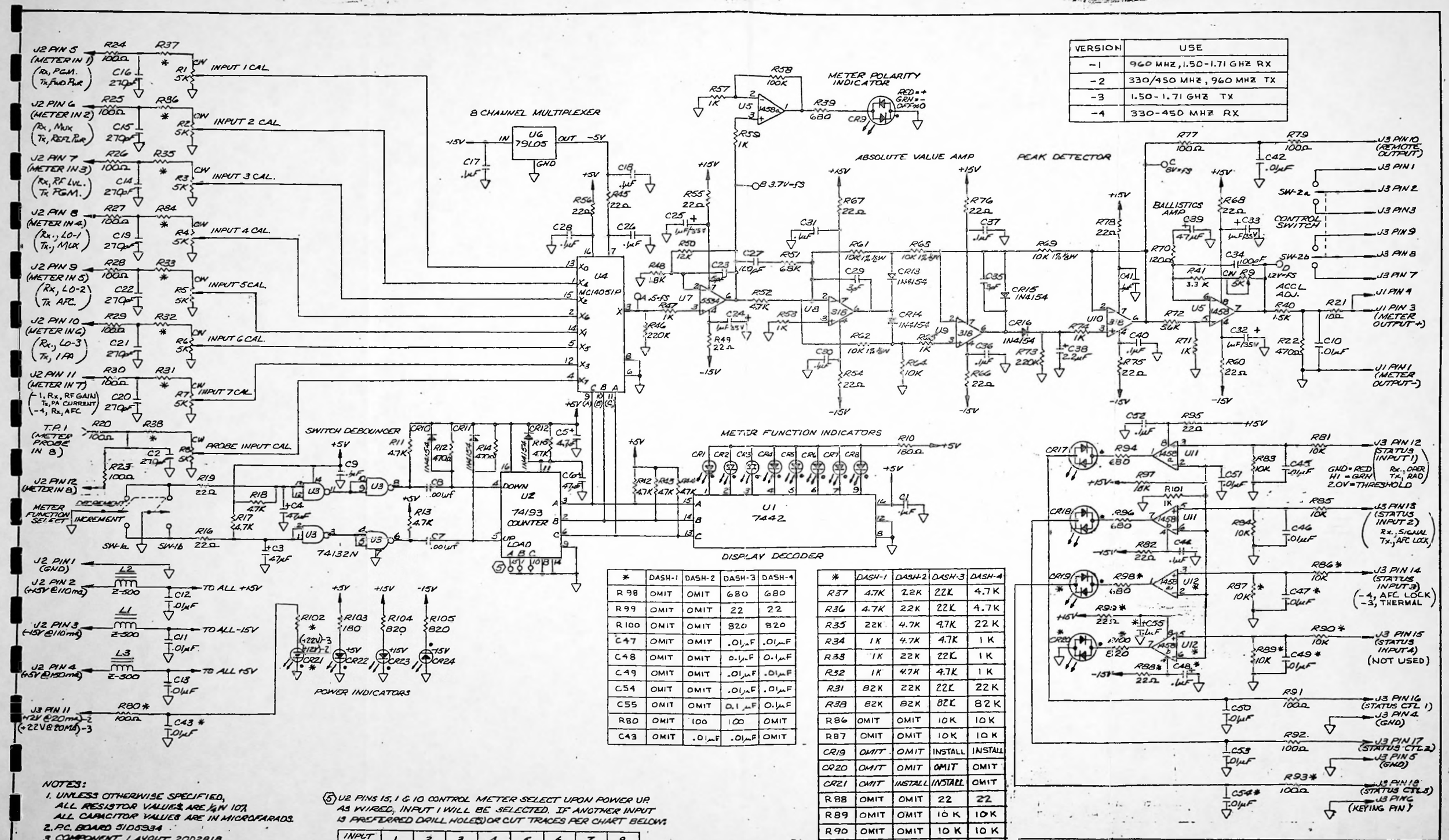

VERSION	USE
-1	960 MHZ, 1.50-1.71 GHZ RX
-2	330/450 MHZ, 960 MHZ TX
-3	1.50-1.71 GHZ TX
-4	330-450 MHZ RX

*	DASH-1	DASH-2	DASH-3	DASH-4
R 98	OMIT	OMIT	680	680
R 99	OMIT	OMIT	22	22
R 100	OMIT	OMIT	820	820
C47	OMIT	OMIT	.01μF	.01μF
C48	OMIT	OMIT	0.1μF	0.1μF
C49	OMIT	OMIT	.01μF	.01μF
C54	OMIT	OMIT	.01μF	.01μF
C55	OMIT	OMIT	0.1 μF	0.1μF
R80	OMIT	100	100	OMIT
C43	OMIT	.01μF	.01μF	OMIT

*	DASH-1	DASH-2	DASH-3	DASH-4
R37	4.7K	22K	22K	4.7K
R36	4.7K	22K	22K	4.7K
R35	22K	4.7K	4.7K	22K
R34	1K	4.7K	4.7K	1K
R33	1K	22K	22K	1K
R32	1K	4.7K	4.7K	1K
R31	82K	22K	22K	22K
R38	82K	82K	82K	82K
R86	OMIT	OMIT	10K	10K
R87	OMIT	OMIT	10K	10K
CR19	OMIT	OMIT	INSTALL	INSTALL
CR20	OMIT	OMIT	OMIT	OMIT
CR21	OMIT	INSTALL	INSTALL	OMIT
R88	OMIT	OMIT	22	22
R89	OMIT	OMIT	10K	10K
R90	OMIT	OMIT	10K	10K
SW-2	ON NONE ON	ON NONE ON	ON NONE ON	ON NONE ON
U12	OMIT	OMIT	INSTALL	INSTALL
R102	OMIT	560	1.2K, ½W	560
R93	OMIT	OMIT	100	100

NOTES:

1. UNLESS OTHERWISE SPECIFIED, ALL RESISTOR VALUES ARE ¼W 10%. ALL CAPACITOR VALUES ARE IN MICROFARADS.
2. P.C. BOARD 51D5934
3. COMPONENT LAYOUT 20D2818
4. R31 THRU R38 VALUES ARE BASED ON THE FOLLOWING DESIGN CRITERIA:
   FULL SCALE RANGE
   1V TO 3.2V → R = 4.7K
   3.2V TO 10V → R = 22K
   10V TO 32V → R = 82K

(5) U2 PINS 15, 1 & 10 CONTROL METER SELECT UPON POWER UP. AS WIRED, INPUT 1 WILL BE SELECTED. IF ANOTHER INPUT IS PREFERRED DRILL HOLE(S) OR CUT TRACES PER CHART BELOW:

INPUT SELECT	1	2	3	4	5	6	7	8
CUT TRACE	NONE	15	1	1&15	10	10&15	1&10	1,10&15

6. ALL DIAGNOSTIC VOLTAGES ARE ± 20%

PRINT PHANTOM ITEMS
PRINT COMPONENTS
PRINT PHANTOM/COMPONENT COMMENTS

PARENT ITEM 9204165 | CROSS REF ITEM | DESCRIPTION METERING & STATUS BD PCL-606 | ENGR DRAW 20D2818-01 R | BATCH QTY 1 | ITEM TYPE 1 | UNIT MEAS EA | LOW LEVEL 04 | PLANNER 443

BOM ITEM	LL CD	COMPONENT & CROSS REF.	DESCRIPTION & COMMENT	ENGINEERING DRAWING NUMBER	QUANTITY PER	UM	ITEM TYP	OPT NBR	FIRST OP SEQ	LT ADJ	EFFECTIVE DATES FROM	TO
1	05	9205006	SUBASSY,NEUTER,MTRG/STAT BD	20D2818-05 R	1.000	EA	1					
2	06	4410338	RES 4.7K OHM 1/4W 10% R36,R37	RC07GF472K	2.000	EA	4					
3	06	4410411	RES 22K OHM 1/4W 10% R35	RC07GF223K	1.000	EA	4					
4	06	4410247	RES 1K OHM 1/4W 10% R32,R33,R34	RC07GF102K	3.000	EA	4					
5	05	4410486	RES 82K OHM 1/4W 10% R31,R38	RC07GF823K	2.000	EA	4					
6	05	3190766	SW,DPDT,ON-NONE-(ON) SW2	0601-210	1.000	EA	4					

PRINT PHANTOM ITEMS
PRINT COMPONENTS
PRINT PHANTOM/COMPONENT COMMENTS

PARENT ITEM CROSS REF ITEM DESCRIPTION METERING & STATUS BD PCL-606TX BATCH QTY 1 ITEM TYPE 1 LOW LEVEL 04
9204199 ENGR DRAW 2002818-02 R UNIT MEAS EA PLANNER 443

BOM ITEM	LL CD	COMPONENT & CROSS REF.	DESCRIPTION & COMMENT	ENGINEERING DRAWING NUMBER	QUANTITY PER	UM	ITEM TYP	OPT NBR	FIRST OP SEQ	LT ADJ	EFFECTIVE DATES FROM	TO
1	05	9205006	SUBASSY,NEUTER,MTRG/STAT BD	2002818-05 R	1.000	EA	1					
2	06	4410411	RES 22K OHM 1/4W 10% R31,R33,R36,R37	RC07GF223K	4.000	EA	4					
3	06	4410338	RES 4.7K OHM 1/4W 10% R32,R34,R35	RC07GF472K	3.000	EA	4					
4	05	4410486	RES 82K OHM 1/4W 10% R38	RC07GF823K	1.000	EA	4					
5	06	3390614	LED GRN 7-12@20 DIFFUSED 75DEG CR21	HLMP-3507	1.000	EA	4					
6	06	3390606	LED HOUSE P-C-LITE CR21HSG	PCR 740 CTP	1.000	EA	4					
7	05	3190774	SW DPDT ON NONE ON 577 2112 SW2	0601-201	1.000	EA	4					
8	05	4410213	RES 560 OHM 1/4W 10% R102	RC07GF561K	1.000	EA	4					
9	06	4410122	RES 100 OHM 1/4W 10% R80	RC07GF101K	1.000	EA	4					
10	06	4310272	CAP .01 50V X7R 10% C43	5018EM50RD103K	1.000	EA	4					

PRINT PHANTOM ITEMS
PRINT COMPONENTS
PRINT PHANTOM/COMPONENT COMMENTS

PARENT ITEM 9204983 | CROSS REF ITEM | DESCRIPTION ASSY MET/STATUS 1.5-1.71GHZ TX ENGR DRAW 2002818-03 R | BATCH QTY 1 | ITEM TYPE 1 UNIT MEAS EA | LOW LEVEL 04 PLANNER 443

BOM ITEM	LL CD	COMPONENT & CROSS REF.	DESCRIPTION & COMMENT	ENGINEERING DRAWING NUMBER	QUANTITY PER	UM	ITEM TYP	OPT NBR	FIRST OP SEQ	LT ADJ	EFFECTIVE DATES FROM	TO
1	05	9205006	SUBASSY,NEUTER,MTRG/STAT BD	2002818-05 R	1.000	EA	1					
2	06	4410411	RES 22K OHM 1/4W 10% R31,R33,R36,R37	RC07GF223K	4.000	EA	4					
3	06	4410338	RES 4.7K OHM 1/4W 10% R32,R34,R35	RC07GF472K	3.000	EA	4					
4	05	4410486	RES 82K OHM 1/4W 10% R38	RC07GF823K	1.000	EA	4					
5	06	3390614	LED GRN T-1 2@20 DIFFUSED 75DEG CR21	HLMP-3507	1.000	EA	4					
6	06	3390606	LED HOUSE P-C-LITE CR19HSG,CR21HSG	PCR 740 CTP	2.000	EA	4					
7	05	3190774	SW DPDT ON NONE ON 577 2112 SW2	0601-201	1.000	EA	4					
8	06	3730215	IC LM1458N OPAMP DUAL U12	LM-1458N	1.000	EA	4					
9	05	4420279	RES 1.2K OHM 1/2W 10% R102	RC20GF122K	1.000	EA	4					
10	06	4410379	RES 10K OHM 1/4W 10% R86,R87,R89,R90	RC07GF103K	4.000	EA	4					
11	06	4410049	RES 22 OHM 1/4W 10% R88,R99	RC07GF220K	2.000	EA	4					
12	06	4410122	RES 100 OHM 1/4W 10% R80,R93	RC07GF101K	2.000	EA	4					
13	06	4410221	RES 680 OHM 1/4W 10% R98	RC07GF681K	1.000	EA	4					
14	06	4410239	RES 820 OHM 1/4W 10% R100	RC07GF821K	1.000	EA	4					
15	06	4310264	CAP .1 50V 25U 20% C48,C55	5020ES50RD104	2.000	EA	4					
16	06	4310272	CAP .01 50V X7R 10% C43,C47,C49,C54	5018EM50RD103K	4.000	EA	4					
17	06	3390598	LED DUAL CR19	521-9177	1.000	EA	4					
18	06	3250016	SKT DUAL IN LINE 8 PIN U12	640463-1	1.000	EA	4					

PRINT PHANTOM ITEMS
PRINT COMPONENTS
PRINT PHANTOM/COMPONENT COMMENTS

PARENT ITEM	CROSS REF ITEM	DESCRIPTION METERING/STATUS ASSY 300-480	BATCH QTY 1	ITEM TYPE 1	LOW LEVEL 04
9204769		ENGR DRAW 20D2818-04 R		UNIT MEAS EA	PLANNER 443

BOM ITEM	LL CD	COMPONENT & CROSS REF.	DESCRIPTION & COMMENT	ENGINEERING DRAWING NUMBER	QUANTITY PER	UM	ITEM TYP	OPT NBR	FIRST OP SEQ	LT ADJ	EFFECTIVE DATES FROM	TO
1	05	9205006	SUBASSY,NEUTER,MTRG/STAT BD	20D2818-05 R	1.000	EA	1					
2	06	4410338	RES 4.7K OHM 1/4W 10% R36,R37	RC07GF472K	2.000	EA	4					
3	06	4410411	RES 22K OHM 1/4W 10% R31,R35	RC07GF223K	2.000	EA	4					
4	06	4410247	RES 1K OHM 1/4W 10% R32,R33,R34	RC07GF102K	3.000	EA	4					
5	05	4410486	RES 82K OHM 1/4W 10% R38	RC07GF823K	1.000	EA	4					
6	06	3390598	LED DUAL CR19	521-9177	1.000	EA	4					
7	06	3390606	LED HOUSE P-C-LITE CR19HSG	PCR 740 CTP	1.000	EA	4					
8	05	3190766	SW,DPDT,ON-NONE-(ON) SW2	0601-210	1.000	EA	4					
9	05	4410213	RES 560 OHM 1/4W 10% R102	RC07GF561K	1.000	EA	4					
10	06	3730215	IC LM1458N OPAMP DUAL U12	LM-1458N	1.000	EA	4					
11	06	4410379	RES 10K OHM 1/4W 10% R86,R87,R89,R90	RC07GF103K	4.000	EA	4					
12	06	4410049	RES 22 OHM 1/4W 10% R88,R99	RC07GF220K	2.000	EA	4					
13	06	4410122	RES 100 OHM 1/4W 10% R93	RC07GF101K	1.000	EA	4					
14	06	4410221	RES 680 OHM 1/4W 10% R98	RC07GF681K	1.000	EA	4					
15	06	4410239	RES 820 OHM 1/4W 10% R100	RC07GF821K	1.000	EA	4					
16	06	4310272	CAP .01 50V X7R 10% C47,C49,C54	5018EM50RD103K	3.000	EA	4					
17	06	4310264	CAP .1 50V 25U 20% C48,C55	5020ES50RD104	2.000	EA	4					
18	06	3250016	SKT DUAL IN LINE 8 PIN U12	640463-1	1.000	EA	4					

PRINT PHANTOM ITEMS
PRINT COMPONENTS
PRINT PHANTOM/COMPONENT COMMENTS

PARENT ITEM 9205006 | CROSS REF ITEM | DESCRIPTION SUBASSY,NEUTER,MTRG/STAT BD ENGR DRAW 2002818-05 R | BATCH QTY 1 | ITEM TYPE 1 UNIT MEAS EA | LOW LEVEL 05 PLANNER 443

BOM ITEM	LL CD	COMPONENT & CROSS REF.	DESCRIPTION & COMMENT	ENGINEERING DRAWING NUMBER	QUANTITY PER	UM	ITEM TYP	OPT NBR	FIRST OP SEQ	LT ADJ	EFFECTIVE DATES FROM	TO
1	06	3473048	PCB METERING & STATUS PCL-606	5105934 C	1.000	EA	9					
3	06	3730173	IC LM318N OPAMP HISPEED U8,U9,U10	LM-318N	3.000	EA	4					
4	06	3730215	IC LM1458N OPAMP DUAL U5,U11	LM-1458N	2.000	EA	4					
5	06	3660206	IC SN7442N BCD-DECIMAL U1	SN7442N	1.000	EA	4					
6	06	3660420	IC SN74132N QU 2IN NAND ST U3	SN74132N	1.000	EA	4					
7	06	3660602	IC SN74193N BINUPDWNCO2CLCK U2	SN74193N	1.000	EA	4					
8	06	3680139	IC MC14051P 8CH MUX R280 7V U4	MC14051P	1.000	EA	4					
9	06	3650132	RGLTR MC79L05 05V 0.1A TO92 U6	MC79L05 ACP	1.000	EA	4					
10	06	3730728	IC NE5534AN OPAMP LO NOISE U7	NE-5534AN	1.000	EA	4					
11	06	3250016	SKT DUAL IN LINE 8 PIN U5,U7,U8,U9,U10,U11	640463-1	6.000	EA	4					
12	06	3250024	SKT DUAL IN LINE 14 PIN U3	640357-1	1.000	EA	4					
13	06	3250032	SKT DUAL IN LINE 16 PIN U1,U2,U4	640358-1	3.000	EA	4					
17	06	4410023	RES 10 OHM 1/4W 10% R21	RC07GF100K	1.000	EA	4					
18	06	4410049	RES 22 OHM 1/4W 10% R16,R19,R45,R49,R54,R55,R56,R60,R66,R67,R68,R75, R76,R78,R82,R95	RC07GF220K	16.000	EA	4					
19	06	4410122	RES 100 OHM 1/4W 10% R20,R23,R24,R25,R26,R27,R28,R29,R30,R77,R79,R91, R92	RC07GF101K	13.000	EA	4					
20	06	4410130	RES 120 OHM 1/4W 10% R70	RC07GF121K	1.000	EA	4					
21	06	4410155	RES 180 OHM 1/4W 10% R10,R103	RC07GF181K	2.000	EA	4					
22	06	4410205	RES 470 OHM 1/4W 10% R12,R14,R22	RC07GF471K	3.000	EA	4					
24	06	4410239	RES 820 OHM 1/4W 10% R104,R105	RC07GF821K	2.000	EA	4					
25	06	4410247	RES 1K OHM 1/4W 10% R47,R53,R57,R59,R65,R71,R74,R101	RC07GF102K	8.000	EA	4					
26	06	4410262	RES 1.5K OHM 1/4W 10% R40	RC07GF152K	1.000	EA	4					

PRINT PHANTOM ITEMS
PRINT COMPONENTS
PRINT PHANTOM/COMPONENT COMMENTS

PARENT ITEM 9205006 CROSS REF ITEM DESCRIPTION SUBASSY,NEUTER,MTRG/STAT BD ENGR DRAW 20D2818-05 R BATCH QTY 1 ITEM TYPE 1 UNIT MEAS EA LOW LEVEL 05 PLANNER 443

BOM ITEM	LL CD	COMPONENT & CROSS REF.	DESCRIPTION & COMMENT	ENGINEERING DRAWING NUMBER	QUANTITY PER	ITEM UM	TYP	OPT NBR	FIRST OP SEQ	LT ADJ	EFFECTIVE DATES FROM	TO
27	06	4410270	RES 1.8K OHM 1/4W 10% R48	RC07GF182K	1.000	EA	4					
28	06	4410387	RES 12K OHM 1/4W 10% R50	RC07GF123K	1.000	EA	4					
29	06	4410338	RES 4.7K OHM 1/4W 10% R11,R13,R15,R17,R18,R42,R43,R44,R52	RC07GF472K	9.000	EA	4					
30	06	4410346	RES 5.6K OHM 1/4W 10% R72	RC07GF562K	1.000	EA	4					
31	06	4410379	RES 10K OHM 1/4W 10% R64,R81,R83,R84,R85	RC07GF103K	5.000	EA	4					
32	06	4410395	RES 15K OHM 1/4W 10% R97	RC07GF153K	1.000	EA	4					
33	06	4410478	RES 68K OHM 1/4W 10% R51	RC07GF683K	1.000	EA	4					
34	06	4410494	RES 100K OHM 1/4W 10% R58	RC07GF104K	1.000	EA	4					
35	06	4410536	RES 220K OHM 1/4W 10% R46,R73	RC07GF224K	2.000	EA	4					
36	06	4410304	RES 3.3K OHM 1/4W 10% R41	RC07GF332K	1.000	EA	4					
38	06	4630729	POT CER PC PIN 5K OHM .75W 20I R1,R2,R3,R4,R5,R6,R7,R8,R9	43P502T050	9.000	EA	4					
39	06	4510145	RES 10.0K OHM 1/8W 1% R61,R62,R63,R69	RN55C1002F	4.000	EA	4					
40	06	4210035	CAP MICA DIP 3PF +/- 0.5 C29,C35	DM-15-030D	2.000	EA	4					
41	06	4210043	CAP MICA DIP 5PF +/- 0.5 C23	DM-15-050D	1.000	EA	4					
42	06	4210266	CAP MICA DIP 100PF 5% C27,C34	DM-15-101J	2.000	EA	4					
43	06	4310074	CAP CER DISC 270PF C2,C14,C15,C16,C19,C20,C21,C22	DD-271	8.000	EA	4					
44	06	4310272	CAP .01 50V X7R 10% C10,C11,C12,C13,C42,C45,C46,C50,C51,C53	5018EM50R0103K	10.000	EA	4					
45	06	4310264	CAP .1 50V 25U 20% C1,C9,C17,C18,C26,C28,C30,C31,C36,C37,C40,C41, C44,C52	5020ES50RD104	14.000	EA	4					
46	06	4280038	CAP EPOX-DIP 1/35V C24,C25,C32,C33	196D105X0035HAI	4.000	EA	4					
47	06	4280046	CAP EPOX-DIP 2.2/35V 20% C38	196D225X0035JAI	1.000	EA	4					
48	06	4280053	CAP EPOX-DIP 4.7/35V 20% C5	196D475X9035JAI	1.000	EA	4					
49	06	4280137	CAP EPOX-DIP 47/20V C3,C4,C6,C39	196D476X0020PE4	4.000	EA	4					

PRINT PHANTOM ITEMS
PRINT COMPONENTS
PRINT PHANTOM/COMPONENT COMMENTS

PARENT ITEM 9205006 | CROSS REF ITEM | DESCRIPTION SUBASSY,NEUTER,MTRG/STAT BD ENGR DRAW 20D2818-05 R | BATCH QTY 1 | ITEM TYPE 1 UNIT MEAS EA | LOW LEVEL 05 PLANNER 443

BOM ITEM	LL CD	COMPONENT & CROSS REF.	DESCRIPTION & COMMENT	ENGINEERING DRAWING NUMBER	QUANTITY PER	UM	ITEM TYP	OPT NBR	FIRST OP SEQ	LT ADJ	EFFECTIVE DATES FROM	TO
50	06	4310280	CAP .001 100V C7,C8	C315C102M1R5CA	2.000	EA	4					
51	06	3600145	DIO 1N4154 25V 4NS SI DO35 CR10,CR11,CR12,CR13,CR14,CR15,CR16	1N4154	7.000	EA	4					
52	06	3390614	LED GRN 7-12@20 DIFFUSED 75DEG CR1,CR2,CR3,CR4,CR5,CR6,CR7,CR8,CR22,CR23,CR24	HLMP-3507	11.000	EA	4					
53	06	3390578	LED DUAL CR17,CR18	521-9177	2.000	EA	4					
54	06	3390580	LED DUAL (90) CR9	550-3006	1.000	EA	4					
55	06	3390606	LED HOUSE P-C-LITE CR1,CR2,CR3,CR4,CR5,CR6,CR7,CR8,CR17,CR18,CR22, CR23,CR24	PCR 740 CTP	13.000	EA	4					
56	06	3190758	SW,DPDT,(ON)-NONE-(ON) SW1	0601-210	1.000	EA	4					
60	06	4020467	FERROX CUBE 500 OHM L1,L2,L3	VK200 10/3B	3.000	EA	4					
62	06	3090347	CONN 4 PIN J1	87233-4	1.000	EA	4					
63	06	3090222	CONN EDGE 12PIN J2	1-87233-2	1.000	EA	4					
64	06	3090255	CONN 18 GOLD PIN J3	1-87233-8	1.000	EA	4					
65	06	3290152	TEST JACK WHITE R ANGLE TP1	430-101	1.000	EA	4					
66	06	1290071	STRIP,BSHG/GROM,.056IN,12.75L1	GS-NY052NA	.400	EA	4					
67	06	4410221	RES 680 OHM 1/4W 10% R39,R94,R96	RC07GF681K	3.000	EA	4					

MUTE AND TRANSFER

Schematic 91C7271
Parts List 20D2820

The Mute and Transfer module contains the necessary logic to squelch the receiver during periods of insufficient RF signal strength. This module also provides automatic changeover between two PCL-606 receivers when one is intended for hot standby service.

The Mute and Transfer module will go into the mute mode whenever pins 1, 2, 4, or 5 of U1 are in a TTL logic low state (0.0 V to +0.4 V). This will occur whenever one or more of the following conditions are present:

1. The front panel OPERATE/TRANSFER switch is in the TRANSFER position, forcing J1 pin 16 to a logic low level.

2. The signal mute line from the FM Demodulator module goes to a logic low level, forcing J1 pin 14 low.

3. The rear panel manual mute input (J18-8) is grounded, forcing J4 to a logic low level.

4. The rear panel auto transfer input (J18-7) is above +2.0 V. This signal will appear on J5, forcing the collector of Q1 to a logic low level.

When one of the above conditions is present, pin 6 of U1 will go to a TTL logic high state (+2.5 V to +5.0 V). This signal appears at J1 pins 12 and 13 and is sent to the Composite Baseband Processor module to activate the FET mute switch. This signal also drives the second half of U1, where it is inverted and sent to J1 pins 10 and 11 to control the front panel OPERATE status LED. Pin 8 of U1 also drives the first half of U2. When the receiver is muted, pin 5 of U2 will be at logic low. This signal exits the module on J6 and goes to the rear panel auto transfer output on J18-6.

Pin 6 of U1 also controls the relay driver (second half of U2). When the receiver is muted, pin 3 of U2 will go high and no current will flow through the coil of squelch relay K1. This condition is also true if power to the receiver is lost. In the mute mode, K1 disconnects the composite signal at J13 and the MUX signals at J15 from J12 and J2 respectively. Also the arm and two unused contacts of K1 are connected to the rear panel (J18 pins 3 through 5) to activate alarms.

When two receivers are in service and the automatic transfer outputs and inputs are cross coupled (auto transfer output J18-6 feom receiver A connected to auto transfer input J18-7 of receiver B and vice versa), the mute logic behavior is transformed from momentary to latching. The two Mute and Transfer modules thus connected form an RS flip-flop with the feedback being carrier over the cross-coupled transfer lines. When any momentary condition mutes a receiver, the other will gain and hold control until it experiences difficulty or is manually transferred with the front panel OPERATE/TRANSFER switch. Transfer can also be forced by momentarily muting the active receiver by grounding its rear panel manual mute input at J18-8.

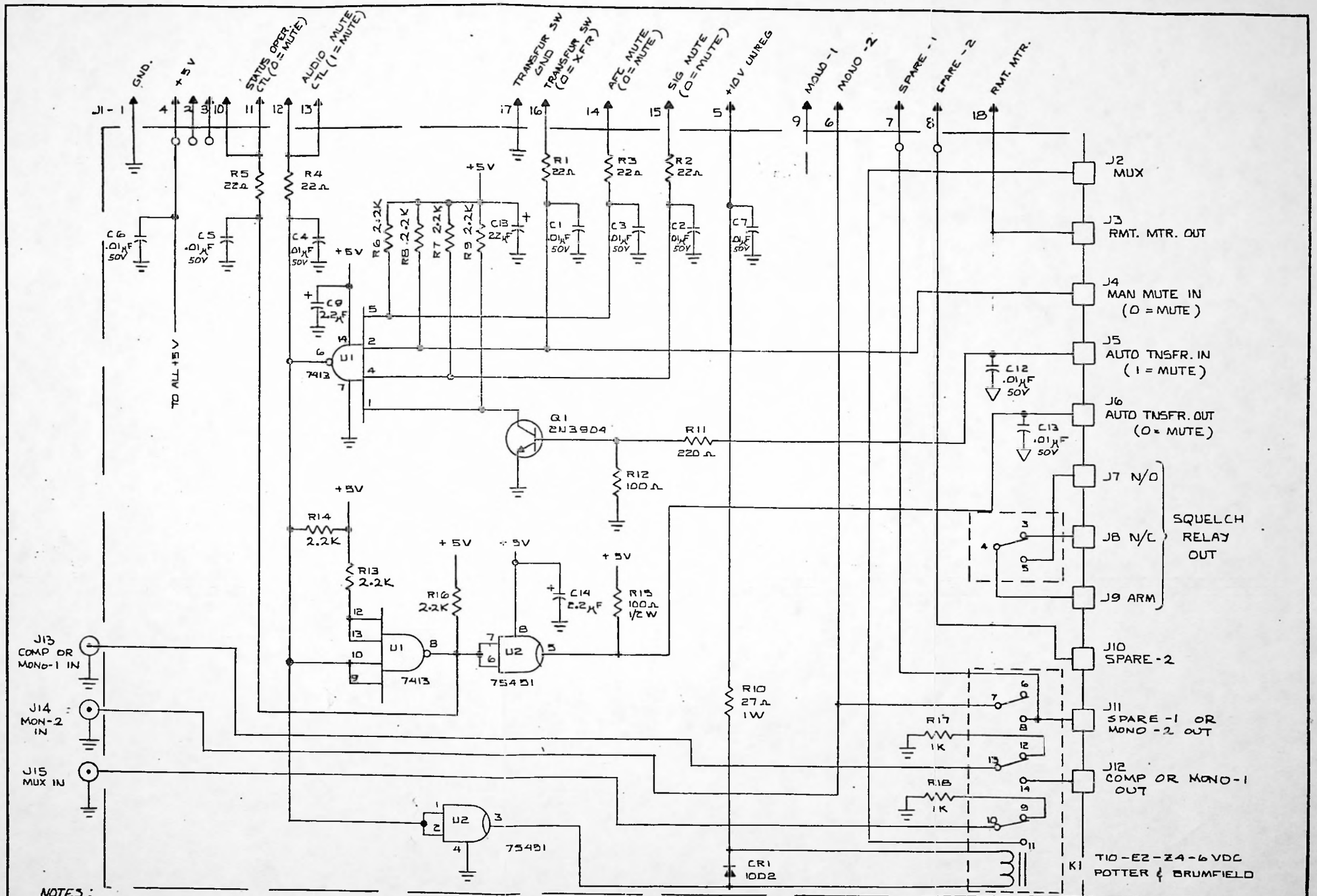
GND.
+5V
STATUS OPER. CTL (0=MUTE)
AUDIO MUTE CTL (1=MUTE)
TRANSFUR SW GND
TRANSFUR SW (0=XFR)
AFC MUTE (0=MUTE)
SIG MUTE (0=MUTE)
+10V UNREG
MONO-1
MONO-2
SPARE-1
SPARE-2
RMT. MTR.
J1-1
TO ALL +5V
R5 22Ω
R4 22Ω
R1 22Ω
R3 22Ω
R2 22Ω
C6 .01μF 50V
C5 .01μF 50V
C4 .01μF 50V
C1 .01μF 50V
C3 .01μF 50V
C2 .01μF 50V
C7 .01μF 50V
R6 2.2K
R8 2.2K
R7 2.2K
R9 2.2K
C13 22μF
C9 2.2μF
U1 7413
Q1 2N3904
R11 220Ω
R12 100Ω
R14 2.2K
R13 2.2K
R16 2.2K
C14 2.2μF
R15 100Ω 1/2W
U2 75451
R10 27Ω 1W
R17 1K
R18 1K
CR1 1002
K1
T10-E2-Z4-6VDC POTTER & BRUMFIELD
C12 .01μF 50V
C13 .01μF 50V
J2 MUX
J3 RMT. MTR. OUT
J4 MAN MUTE IN (0 = MUTE)
J5 AUTO TNSFR. IN (1 = MUTE)
J6 AUTO TNSFR. OUT (0 = MUTE)
J7 N/O
J8 N/C
J9 ARM
SQUELCH RELAY OUT
J10 SPARE-2
J11 SPARE-1 OR MONO-2 OUT
J12 COMP OR MONO-1 OUT
J13 COMP OR MONO-1 IN
J14 MON-2 IN
J15 MUX IN
NOTES:
1. UNLESS OTHERWISE SPECIFIED RESISTOR VALUES ARE IN OHMS, 1/4W, 10% AND CAPACITOR VALUES UNLESS SPECIFIED ARE IN MICROFARADS.
2. P.C. BOARD 51C5936.
3. COMPONENT LAYOUT 20D2820
9IC7271
MOSELEY ASSOCIATES, INC.
SANTA BARBARA RESEARCH PARK
GOLETA, CALIFORNIA 93017
MUTE LOGIC AND TRANSFER BOARD PCL-6060
SCALE: NONE
9IC7271
E

*		MUTE & TRANSER 20D2820-2		9204330	*
	*	MUTE & TRANSFER 20D2820-1		9204181	*
.15'	.15'	TUBING, TEFLON #22		1560234	30
11	11	PC JACK CONCORD 09-9064-1-06	J2-J12	3291085	29
1	1	CONN 18 PIN AMP 1-87233-8	J1	3090255	28
3	2	COAX ASSY, SMB/RT & SMB PC CONN/RT MAI 24B1093-3	J13-J15	2202356	27
					26
1	1	RELAY 4PDT POTTER & BRUMFIELD T10-E2-Z4-6VDC	K1	3270337	25
					24
3	3	CAPACITOR 2.2µf/35V 20% SPRAGUE 196D225X0035JAI	C8,9,14	4280046	23
9	9	CAPACITOR .01µf/50V ENCON SOIBEM 50RD103K	C1-7,12,13	4310272	22
					21
.17'	.17'	WIRE, BUS #22		1641927	20
1	1	RESISTOR 27Ω 1W 10% AB RC32GF270K	R10	4430104	19
1	1	" 100Ω ½W 10% AB RC20GF101K	R15	4420147	18
2	2	" 1K 1/4W 10% AB RC07GF102K	R17,18	4410247	17
1	1	" 220Ω 1/4W 10% AB RC07GF221K	R11	4410163	16
1	1	" 100Ω 1/4W 10% AB RC07GF101K	R12	4410122	15
7	7	" 2.2K 1/4W 10% AB RC07GF222K	R6-9,13,14,16	4410288	14
5	5	" 22Ω 1/4W 10% AB RC07GF220K	R1-R5	4410049	13
					12
					11
1	1	DIODE 1002 INT RECT 200V 1A SI	CR1	3610003	10
1	1	TRANSISTOR MOTOROLA 2N3904	Q1	3630456	9
					8
1	1	IC SOCKET 14 PIN AMP 640357-1	U1	3250024	7
1	1	IC SOCKET 8 PIN AMP 640463-1	U2	3250016	6
					5
1	1	IC TI SN75451P DU AND.HI V OC	U2	3660917	4
1	1	IC TI SN7413N DU 4IN NAND ST	U1	3660115	3
					2
1	1	PC BOARD MAI 51C5936 REV-11	-21	3473105	1
-2	-1	DESCRIPTION	REF DES	STOCK NO.	ITEM NO
QTY					

REVISIONS		
F	ITEM 27 WAS 4410270 ECO 3324	
E	DELETED CIRCUITS 20D2820-2 ECO 3180	
D	ADD NOTE 6 ECO 3157 JUN 82	

MOSELEY ASSOCIATES, INC.
SANTA BARBARA, CALIFORNIA

COMPONENT LAYOUT
MUTE & TRANSFER BD

DWN 10A 9-14-81 SCALE 2X
CHK 11-1-81
ENG 11-9-81
20D2820 F

RECEIVER POWER SUPPLY

Schematic 91C7267
Assembly 21D2741
Parts List 20C2815

The Receiver Power Supply module consists of three sub-assemblies: the ac power connector, step-down transformer T1, and the regulator PC board.

CAUTION

Failure to ground the third lead of the input power cord may result in harzardous shocks to personnel.

The ac power connector includes fuse F1, an RF filter, and the voltage selector card (PC card). The PC card can be inserted four different ways, which allows the user to select one of the four input voltage ranges listed below:

Nominal Voltage (rms)	Minimum Voltage (rms)	Maximum Voltage (rms)	Line Fuse
100	90	100	1 A
120	108	132	1 A
220	198	242	0.5 A
240	216	264	0.5 A

The voltage selected can be observed on the PC card through the window in the ac power connector.

If the voltage selector card needs to be changed to match the available power, do the following: Unplug the power cord, and slide the access window to the left. Pull out the FUSE PULL lever and remove the fuse. With small needle-nose pliers, firmly grasp the PC card and remove it with a straight pull.

Select the operating voltage by orienting the PC card to position the desired voltage number on the top left side. Replace the PC card with the needle-nose pliers.

If the voltage selector card is changed, change the fuse to agree with the above list. Return the FUSE PULL lever to its normal position and insert the fuse into the holders. Slide the window to the right and install the ac power cord.

The voltage selector card changes the primary connections for step-down transformer T1. The transformer has two primary windings which are placed in parallel for 120 Vac operation and in series for 240 Vac operation. One winding is tapped for 100 Vac or 220 Vac operation.

The Receiver Power Supply provides three regulated voltages (+15 V, -15 V, and +5 V) and one unregulated voltage (+9 V). The voltage ranges and current limits of the power supplies are listed below:

Supply	Voltage Range	Current
+15 V (J9)	14.25 to 15.75	0.75 A
-15 V (J7)	-14.25 to -15.75	0.50 A
+5 V (J10)	4.75 to 5.25	0.50 A
+9 V (J4)	7.2 to 10.8	0.16 A (typical)

Note: The +9 V supply provides about .50 ampere at initial turn-on. The additional power is required to heat the crystal oven in the first local oscillator. About 30 to 45 seconds after turn-on, this current should decrease to the nominal value of 0.16 A.

CR5 and CR9 form a full-wave bridge rectifier to produce +9 V unregulated. The unregulated supply is used to provide power to the Mute and Transfer relay and to the crystal oven in the first local oscillator. R1 acts as a fusible resistor in the event the +9 V unregulated supply is inadvertently grounded.

(This Page Deliberately Blank)

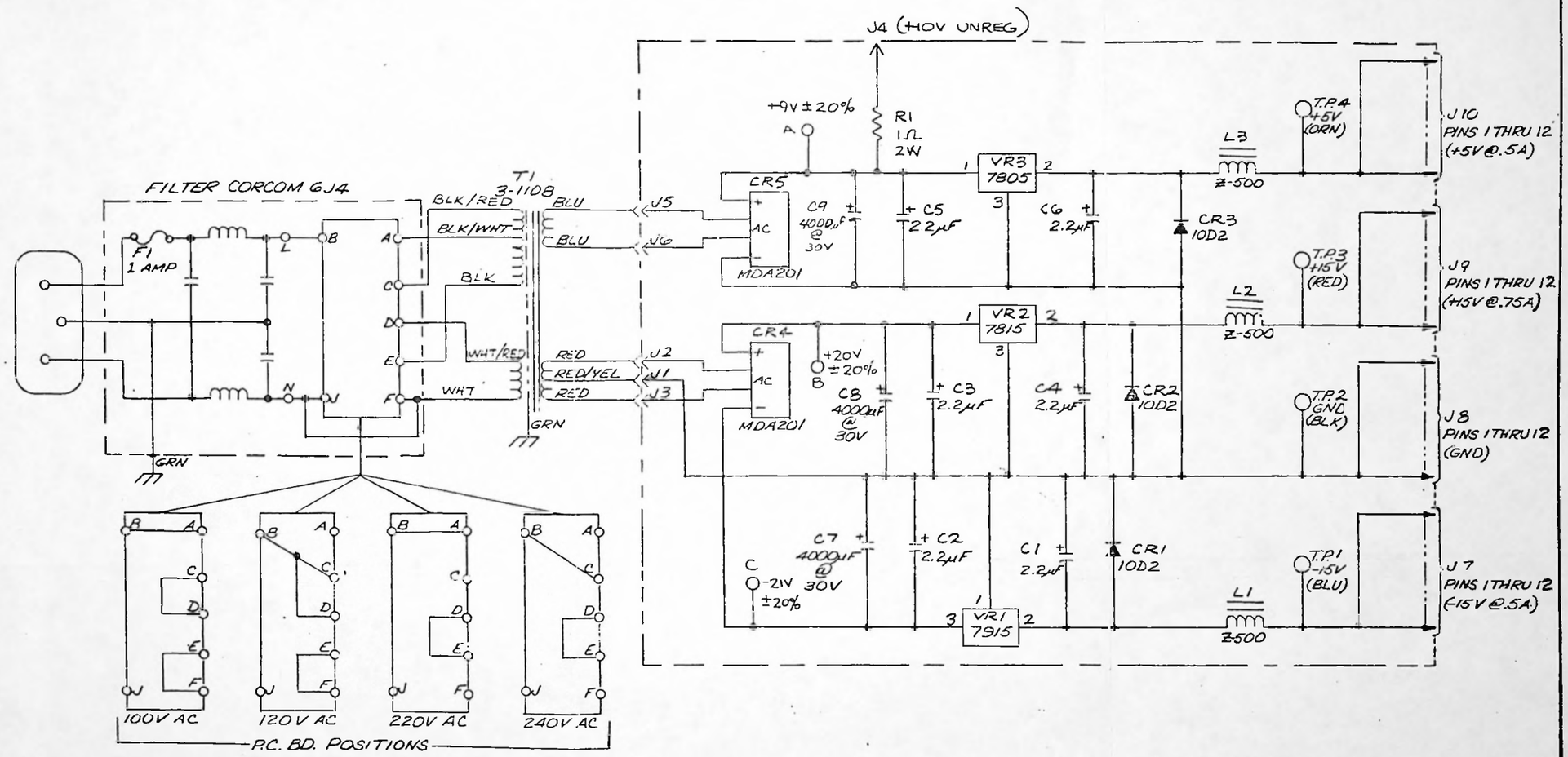

NOTES

1. PC BOARD 51C5931.
2. COMPONENT LAYOUT 20C2515

USED ON: PCL 606 RCVR

C	DELETED FILM REV. CALLOUT. ECO 30-S. J.V. 11-13-83		
B	RELEASE TO PRODUCTION ECO 3366		
A			
REVISIONS			

MOSELEY ASSOCIATES, INC.
SANTA BARBARA RESEARCH PARK
GOLETA, CALIFORNIA 93117

SCHEM. — POWER SUPPLY RCVR

TOL. FRACT. ± 1/32, .XX ± .030, .XXX ± .010, ∠ ± 1/2°

DWN: [illegible] 11-2-81
CHK: [illegible] 11-2-81
ENG: [illegible] 11-2-81

SCALE:

91C7267 C

91C7267

1/75 DIETERICH-POST CLEARPRINT 1020 B

QTY.	DESCRIPTION	REF. DES.	STOCK NO.	ITEM NO.
1	LABEL, HIGH VOLTAGE, AVERY (ORN)	FL 1	3430063	14
7	SCREW, S.S. B.H. 4-40 X 1/4		1050129	13
				12
4	SCREW, S.S. B.H. 6-32 X 3/8		1090208	11
4	CLIP NUT, SHURLK SL-210-06-2 #6-32		1090109	10
				9
5	CONN., AMP 2-35-0804-2	J1-3, 5, 6	3[illegible]0004	8
1	FUSE, BUSS AGC 1A 250V	F 1	3370095	7
1	LABEL, CORCOM 85-1502 1/2 A. TO 1 A.	FL 1	3430048	6
1	COVER, CORCOM MAI 5B2815	FL 1	2031896	5
1	FILTER CORCOM, 6J4	FL 1	3370046	4
1	TRANSFORMER, 3-1108	T 1	4090437	3
1	P.C. BOARD, MAI 20C 2815		9204173	2
1	CHASSIS, MAI 5C2762		2031813	1
*	POWER SUPPLY, RCVR. 21D2741		9102112	*

RE-RELEASE FOR PRODUCTION. ECO 3366 A-3 2-20-82

INCORRECT LABEL SHOWN, ITEM 14 ECO 3274 12-17-81

ITEM 11 WAS 6-32 ECO 3266 10-28-81

ITEM 10 WAS 8-32 ECO 3245 12-4-81 ITEM 7 WAS MDL 1A ECO 3232 12-2-81

REL. FOR PROD. ECO 3073 3-[illegible]-81

DATE

MOSELEY ASSOCIATES, INC.
SANTA BARBARA RESEARCH PARK
GOLETA, CALIFORNIA 93117

POWER SUPPLY, RCVR

21D2741 | EØ

PRINT PHANTOM ITEMS
PRINT COMPONENTS
PRINT PHANTOM/COMPONENT COMMENTS

PARENT ITEM 9204173 CROSS REF ITEM DESCRIPTION POWER SUPPLY RCVR PCL-606 ENGR DRAW 20C2815 K BATCH QTY 1 EFFEC 8/16/84 ITEM TYPE 1 UNIT MEAS EA LOW LEVEL 04 PLANNER 440

BOM ITEM	LL CO	COMPONENT & CROSS REF.	DESCRIPTION & COMMENT	ENGINEERING DRAWING NUMBER	QUANTITY PER	UM	ITEM TYP	OPT NBR	FIRST OP SEQ	LT ADJ	EFFECTIVE DATES FROM	TO
1	05	3473097	PCB PWR SUPPLY RCVR PCL-606	51C5931 C	1.000	EA	9					
2	05	2110260	HEATSINK PWR SUPPLY PCL-606	0592754 A0	1.000	EA	2					
3	06	4280046	CAP EPOX-DIP 2.2/35V 20% C1,C2,C3,C4,C5,C6	1960225X0035JAI	6.000	EA	4					
4	05	4270047	CAP PWR LYTIC 4000/30V C7,C8,C9	36DX402G030AA2A	3.000	EA	4					
7	05	4590063	RES 1 OHM 2W 5% R1	BWH 1 2W 5%	1.000	EA	4					
9	06	3610003	DIO 1002 200V 1A SI D039 CR1,CR2,CR3	1002	3.000	EA	4					
10	05	3610078	DIO MDA-201 100V BRIDGE 2A CR4,CR5	MDA-201	2.000	EA	4					
12	05	3650223	RGLTR UA7915UC 15V 1.5A TO220 VR1	7915UC	1.000	EA	4					
13	05	3650207	RGLTR UA7615UC 15V 1.5A TO220 VR2	7815UC	1.000	EA	4					
14	05	3650173	RGLTR UA7805UC 05V 1.0A TO220 VR3	UA7805UC	1.000	EA	4					
16	06	4020457	FERROX CUBE 500 OHM L1,L2,L3	VK200 10/38	3.000	EA	4					
17	05	115001C	SCR BDRH SLTD 10/32X1/4	BINDER HEAD	6.000	EA	4					
18	06	3290087	TEST PT BLUE VERT TP1	105-0860-001	1.000	EA	4					
19	05	3290020	TEST PT BLK VERT TP2	105-0853-001	1.000	EA	4					
20	05	3290046	TEST PT RED VERT TP3	105-0852-001	1.000	EA	4					
21	06	3290053	TEST PT ORANGE VERT TP4	105-0856-001	1.000	EA	4					
22	05	1050129	SCR BDRH SLTD 4/40 X 1/4 SST	BINDER HEAD	5.000	EA	4					
23	05	1290188	SIL PAD	7403-09-FR-51	3.000	EA	4					
24	05	1050665	WSHR SHLDR #4 NYL	B51547F015	3.000	EA	4					
25	05	3090271	CONN 12PIN GLD-NICKL PLATE J7,J8,J9,J10	1-87224-2	4.000	EA	4					
27	06	3290830	LUG GND J1,J2,J3,J4,J5,J6	836	6.000	EA	4					
28	05	1150127	WSHR LK #10 INTL T	LOCKWASHER #10	6.000	EA	4					

SECTION 6

ALIGNMENT PROCEDURES

6.1 INTRODUCTION

This section presents the alignment procedures for the PCL-606/C and a list of recommended test equipment. Also included are descriptions of all module adjustments, general troubleshooting information, and test fixture diagrams. Relevant troubleshooting information is included at the end of each alignment procedure.

6.2 TEST EQUIPMENT

Table 6-1 lists the test equipment recommended for use in the alignment procedures. Equivalent items of test equipment may also be used.

6.3 ALIGNMENT PROCEDURES

The PCL-606/C alignment procedures include the following:

1. STL frequency alignment
2. Receiver sensitivity
3. Receiver selectivity
4. Transmitter deviation, and receiver output level calibration
5. Ultimate signal-to-noise ratio
6. Distortion alignment
7. Stereo separation, and signal-to-noise ratio
8. Stereo crosstalk

Table 6-1. Recommended test equipment.

Instrument Type	Suggested Model	Critical Specification
COUNTER	Tektronix DC-508A 1.3 GHz Counter Note: For dual links on same frequency, include Option 01	Single Link ±5 ppm Dual Link ±0.2 ppm
DIRECTION COUPLER	Microlab/FXR Model CB-49B	30 dB 1.0 - 2.0 GHz
ATTENUATOR, 50-OHM LOAD	Philco 662A-30 or Sierra 661A-30	50 Ohm 30 dB
ATTENUATOR, ADJUSTABLE	Kay Elemetrics Model 432D	50 Ohm 1, 2, 3, 5, 10 & 20 dB steps
RF SIGNAL GENERATOR	Hewlett-Packard Model 8640B with Option 01 & 02	Freq. Range: 0.5 MHz to 1024 MHz Residual FM: Less than 30 Hz, 20 Hz to 15 kHz Less than 10 Hz, 300 Hz to 3 kHz Output Level Accuracy: ±3.5 dB -7 to -47 dBm ±4.0 dB -47 to -137 dBm Output Impedance: 50 Ohm FM Deviation Bandwidth: dc to 250 kHz
DISTORTION MEASUREMENT	Hewlett-Packard Model 339A or Tektronix AA501 with SG505 and TM503 Main Frame	Distortion Measurement Residual Noise: (80 kHz) -92 dB Imput Impedance: 100k Ohm shunted by less than 100 pF Accuracy: 20 Hz to 20 kHz ±2% 10 Hz to 110 kHz ±4% Oscillator Frequency Range: 10 Hz to 110 kHz Output Level: 3 V rms into 600 Ohm Distortion: 10 Hz to 20 kHz -95 dB (0.00187%)THD

Instrument Type	Suggested Model	Critical Specification
AUDIO OSCILLATOR	Hewlett-Packard 204C	600 Ohm output frequency range 100 kHz to 200 kHz
RF SPECTRUM GHz ANALYZER 3 GHZ	Hewlett-Packard Model 8559A with 18IT display	Frequency Band: 0.01-3 Dynamic Range: 0.01 to greater than 70 dB Display Range: Log 10 dB/div and 1 dB/div Display Accuracy: Log Less than 2 dB over full range Input Impedance: 50 Ohm SWR: 1.3 dB 10 dB input attenuation
AUDIO SPECTRUM ANALYZER	Tektronix Model 7L5 with Option 25 and L3 Plug-in 7603 Main Frame	Input Impedance: 1 M Ohm/28 pF Input Frequency: 10 Hz to less than 500 kHz Display Range: 80 dB, log 10 dB/div
POWER METER AND SENSOR	Hewlett-Packard Model 435A with Model 8481A Power Head	Accuracy: ±1% of full scale Power Range: -25 dBm (3 MicroW) to +20 dBm (100 mW) full scale
STEREO GENERATOR	RCA BTS-101A	Stereo SNR: 75 dB Separation: 55 dB THD: 0.1% or less
STEREO DEMODULATOR	QEI Model 691	Stereo SNR: 75 dB Separation: 55 dB THD: 0.05% or less
OSCILLOSCOPE	Tektronix Model T932A	Bandwidth: 35 MHz
MULTIMETER	Data Precision Model 935	Floating input
50 Hz FILTER	Figure 6-15	
75 Micro-s DE-EMPHASIS NETWORK	Figure 6-16	
AUDIO	Figure 6-17 AMPLIFIER	
STEREO SOURCE	Figure 6-18 SELECTOR	

6.3.1 STL Frequency Alignment

Specification:

±0.00025%, 0° to 50° C (±2.375 kHz at 950 MHz)

±500 Hz at 25° C (77° F)

Description:

The STL frequency is aligned by using a counter to measure the transmitter output frequency and the receiver first local oscillator frequency. A high-precision counter (±0.2 ppm) is recommended to align STL links that are used in a redundant installation. If such a counter is not available, we recommend that both STL systems be aligned at the same time using the same counter. A difference greater than 2 kHz between the STL transmitter center frequency and receiver center frequency will result in degradation of the distortion, separation, and crosstalk performance.

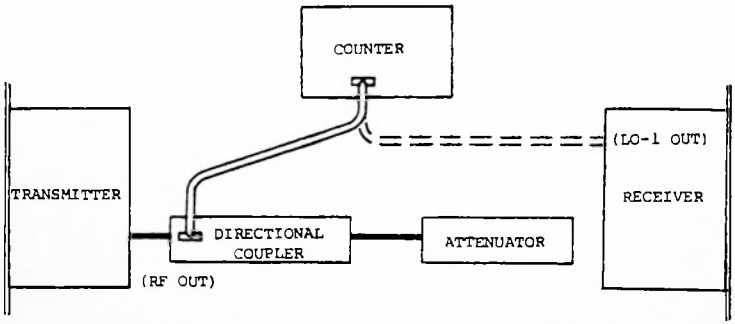

CAUTION: Place the transmitter RADIATE/STANDBY switch in STANDBY until the coupler and attenuator are connected.

Figure 6-1. Test setup for frequency alignment.

Test Equipment:

Name	Manufacturer	Model
Counter	Tektronix	EC-508A with option 01
Directional Coupler	Microlab	FXR CB-49N
Attenuator, Load	Philco	662A-30

Procedure:

1. Connect the equipment as shown in Figure 6-1.

2. Position the transmitter RADIATE/STANDBY switch to the RADIATE position. Verify that the RADIATE, AFC LOCK, and +12 V status LEDs are green.

   Using the METER FUNCTION switch, select the FWD POWER position. Verify that the front panel meter reads between -3 and +2 dB on the top scale.

3. Check the serial number label on the back of the STL transmitter for its operating center frequency. The counter should indicate the frequency within 8 kHz of the specified center frequency. If it does note, proceed to the troubleshooting portion of this procedure and verify that the First LO and FMO are operating at their specified frequencies.

4. While monitoring the counter, adjust the transmitter First LO frequency adjustment for a reading of the specified transmitter frequency ±200 Hz.

5. Using the METER FUNCTION switch on the STL receiver, select the LO 1 position. Verify that the indication is within the lower arc on the receiver front panel meter.

6. Calculate the receiver first LO frequency by adding 70 MHz to the frequency specified on the serial number label at the back of the PCL-606/C Receiver.

7. Connect a frequency counter to the output of the receiver first LO. (Note: If an adapter is not available, the MUX 1 connector may be temporarily removed from the transmitter for this purpose.) The counter should indicate a frequency within ±8 kHz of the frequency calculated in Step 6. If it does not, proceed to the troubleshooting portion of this procedure.

8. Using the counter, adjust the receiver First LO frequency adjustment for a reading within ±200 Hz of the frequency calculated in Step 6.

Note: If two STL systems are installed for redundant operation, both should be aligned for frequency at the same time.

Troubleshooting:

1. The crystal in the transmitter First Local Oscillator should be 950.000 MHz/51.000 MHz.

2. The crystal frequency of the Receiver First LO should be the same as that specified on the serial number label on the back of the PCL-606 Receiver.

3. If the First LO fails to meet the ±8 kHz specified in this procedure, the crystal oven should be checked to ensure that it is operating at 65° C ±5° C.

4. If the transmitter frequency fails to meet the ±8 kHz specified in this procedure and the First LO appears to be operating to specification, the FMO should be checked to ensure that it is operating at its designed frequency. The FMO frequency may be calculated as follows:

   FMO frequency = 1020 MHz minus the transmitter center frequency

   The FMO frequency should be within ±1 kHz of the value calculated.

5. A red AFC lock status will inhibit the green +12 V power supply status indicator and cause the RADIATE status indicator to remain red.

(This Page Deliberately Blank)

6.3.2 Receiver Sensitivity

Specification:

30 Micro-V, or less, for 60 dB SNR broadband, de-emphasized

150 Micro-V, or less, for 60 dB SNR left or right channel demodulated stereo, de-emphasized.

Description:

The sensitivity of the PCL-606 STL Receiver is verified using a signal generator and either a de-emphasis network or a de-emphasized stereo demodulator.

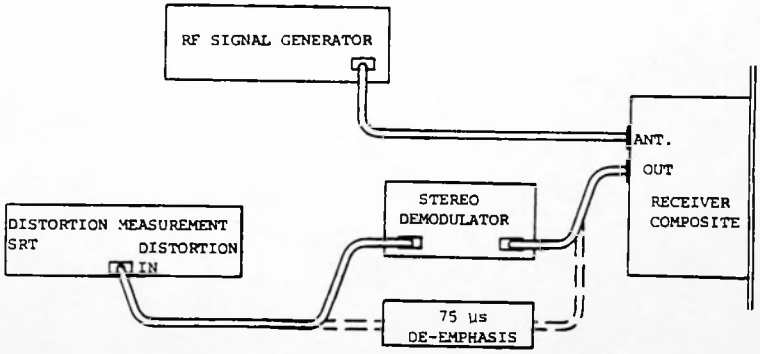

Figure 6-2. Sensitivity test setup.

Test Equipment:

Name	Manufacturer	Model
RF Signal Generator	Hewlett-Packard	HP-8640B
75 Micro-s De-emphasis Network		(See Figure 6-16)
Stereo Demodulator	QEI	Model 691
Distortion Measurement Set	Hewlett-Packard	HP-339A

Procedure:

1. Connect the equipment as shown in Figure 6-2, and set the controls on the signal generator as follows:

Meter Level	Volts
AM Modulation	Off
FM Deviation	Off
Range MHz	1024/512
Frequency Tuned	Tuned to center frequency (indicated on serial number label on back of STL receiver).
Output Level	-40 dBm
RF	On

   Adjust the output level on the signal generator for a reading of 3 mV on the signal generator meter.

2. Using the METER FUNCTION switch on the PCL-606 Receiver, select the RF LEVEL meter position. Verify that the meter reads within the 3K range of the middle scale. If it does not, verify that TP1 on the Preamplifier and First Mixer module is between -14 and -16 V prior to troubleshooting.

3. While monitoring the center scale of the receiver meter, switch the OUTPUT LEVEL ADJ on the signal generator from -40 to -110 and verify that the signal strength reads within the meter range for each setting. If it does not, proceed to paragraph 6.4.N, FM Demodulator Log Gain Adjust, prior to continuing the test, and perform the calibration adjustments given there.

4. Using the METER FUNCTION switch on the receiver, select the PGM LEVEL position.

   Set the FM Deviation on the RF Signal generator to ON.

   Set the modulation frequency on the signal generator to 400 Hz.

   Adjust the deviation control on the signal generator so that the meter on the STL receiver reads 0 dB on the top scale. Verify that the deviation on the signal generator reads 50 ±8 kHz.

5. Set the controls on the distortion measurement equipment for a 0 dB reference.

   Set the FM Deviation on the RF signal generator to OFF.

   Position the controls on the distortion measurement equipment for a reading of 60 dB SNR.

   Reduce the RF LEVEL adjustment on the RF signal generator until the distortion measurement equipment reads 60 dB.

   Observe the RF level output of the signal generator; it should indicate less than 150 Micro-V.

6. Set the controls on the distortion measurement equipment for a signal-to-noise ratio of 40 dB.

   Reduce the RF level on the signal generator until the mute threshold LED on the FM Demodulator module indicates red. Observe the RF level output of the signal generator; it should indicate between 18 and 22 Micro-V. If not, the MUTE THRESHOLD ADJ on the FM Demodulator module should be rotated fully counterclockwise. Then

set the RF level output of the signal generator to 20 Micro-V and adjust the MUTE THRESHOLD ADJ until the mute threshold LED changes from off to red.

Note: This completes the testing for sensitivity if the STL receiver is used in a composite link.

7. Broadband De-emphasized SNR

Replace the stereo demodulator with a 75 Micro-s de-emphasis network. (See Figure 6-16.) Repeat the above steps 1 through 6 with the following exception:

The specification for 60 dB signal-to-noise ratio is 30 Micro-V, or less.

Troubleshooting:

1. The cable between the RF signal generator and the STL receiver should be kept at a minimum to reduce insertion loss. As an example, a 3-foot cable (RG-58) will cause a 1 dB or 10% loss in signal.

2. Prior to troubleshooting, verify that the RF GAIN ADJ on the Preamplifier and First Mixer module is fully clockwise and that TP1 reads between -14 and -16 volts.

3. Verify the RF gain distribution outlined in paragraph 6.5.2, step 5 (General Trouble shooting Information).

6.3.3 Receiver Selectivity

Specification:

Bandwidth	1st 10.7 MHz IF	2nd 10.7 MHz IF
±100 kHz	1.5 dB	3 dB
±450 kHz	30 dB	60 dB
±1 MHz	70 dB	80 dB

Description:

The STL link selectivity is determined by positioning the 2ND 10.7 MHz FIL SEL switch located on the receiver Double Converter module to the IN or OUT position. In general, this switch should be placed in the IN position when strong adjacent channels exist within 1 MHz of the STL center frequency. Unless otherwise specified on the purchase order, this switch is placed in the IN position during factory alignment.

Changing the STL receiver selectivity affects the distortion, stereo separation, stereo crosstalk, and multiplex output performance of the STL link. If you desire to operate the receiver in the wide IF mode to reduce system distortion, it will be necessary to perform the alignments in sections 6.3.6 (Distortion Alignment) and 6.3.7 (Stereo Separation).

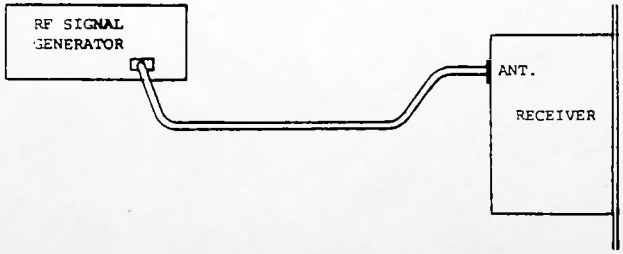

Figure 6-3. Selectivity test setup.

Test Equipment:

RF Signal Generator	Hewlett-Packard 8640B

Procedure:

1. Connect the equipment as shown in Figure 6-3. Set the controls on the signal generator as follows:

Meter Level	Volts
AM Modulation	Off
FM Deviation	Off
Range MHz	1024/512
Frequency Tuned	Tuned to the center frequency (indicated on the serial number label on the back of the STL receiver).
Output Level	-40 dBm
RF	On

   Adjust the output level on the signal generator for a reading of 3 mV on the signal generator meter.

2. Using the receiver METER FUNCTION switch, select the RF LEVEL meter position. Verify that the meter reads within the 3K range of the middle scale.

3. Position the OUTPUT LEVEL switch on the signal generator to -100. Verify that the receiver meter reads within the 3 Micro-V range on the center scale. Note the position of the meter reading as a reference for the -60 dB point.

4. Position the OUTPUT LEVEL on the signal generator to -40. Increase the frequency on the signal generator until the meter reading on the receiver front panel is the same as the value noted in paragraph 3. Subtract the carrier frequency from the value indicated on the signal generator. The value calculated indicates the positive -60 dB point.

5. Decrease the frequency on the signal generator until the meter reads the same as the value noted in paragraph 3. Subtract the frequency indicated on the signal generator from the center frequency. This value indicates the -60 dB bandwidth point.

6. The bandwidth calculated in paragraphs 4 and 6 should be no greater than ±900 kHz when the 2nd 10.7 MHz FIL SEL switch is in the OUT position, or no greater than ±450 kHz when the switch is in the IN position.

Troubleshooting Notes

The cable bewteen the RF signal generator and the STL receiver should be kept at a minimum to reduce insertion loss. As an example, a 3-foot cable (RG-58) will cause a 1 dB or 10% loss in signal.

Use of the RF gain adjustment on the Preamplifier and 1st Mixer module may cause the meter reading to be less than 3mV. In this event, the RF gain should be reset to 15 on the bottom meter.

6.3.4 Transmitter Deviation, and Receiver Output Level Calibration

Specification:

Transmitter: 3.5 V p-p composite input equals ±50 kHz deviation.

1.5 V p-p MUX 1 equals ±5 kHz deviation.

1.5 V p-p MUX 2 equals ±7.5 kHz deviation.

Receiver: Composite output equals 3.5 V p-p with 50 kHz deviation (30 Hz - 80 kHz).

MUX output equals 1.5 V p-p for 5.0 kHz deviation (80 kHz - 190 kHz).

Description:

The deviation and modulation sensitivity of the composite information is aligned using a Bessel null function as a reference. The MUX channel is aligned using an RF generator as a reference.

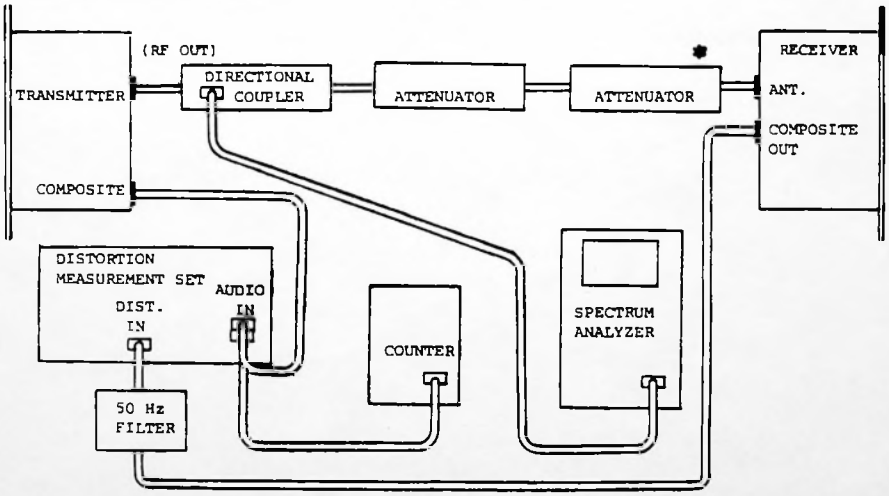

CAUTION: Place the transmitter RADIATE/STANDBY switch in STANDBY until the coupler and attenuator are connected.

*CAUTION: To avoid receiver damage, initially set attenuator for maximum attenuation.

Figure 6-4. Test setup for deviation alignment.

Test Equipment:

Counter	Tektronix DC-508A
Directional Coupler	Microlab FXR CB49N
Attenuator, 50 Ohm Load	Philco 662A-30
Attenuator, Adjustable	Kay Elemetrics 432D
RF Signal Generator	HP-8640B
Distortion Measurement Set	HP-339A
Audio Oscillator	HP-204C
Spectrum Analyzer	HP-8559A
50 Hz Filter	(See Figure 6-15)
Oscilloscope	Tektronix T932A

Procedure:

1. Connect the equipment as shown in Figure 6-4.

2. Adjust the audio oscillator of the distortion measurement set for an output voltage of 1.25 V rms (3.5 V p-p) at 20.79 kHz as follows:

   a. Position the meter function switch to the oscillator level position and adjust the oscillator level controls for a reading of 1.25 V rms on the meter.

   b. Using the counter to monitor the oscillator frequency, position the frequency controls for a reading of 20.79 kHz.

3. Position the STL transmitter RADIATE/STANDBY switch to the RADIATE position.

   Using the METER FUNCTION switch, select the FWD POWER position and verify that the meter reads -3 dB and +2 dB on the top scale.

4. Using the spectrum analyzer, monitor the modulated RF output of the STL transmitter. The controls of the spectrum analyzer should be in the following positions:

Frequency Band GHz	01-3
Time/DIV	Auto
Trigger	Free run
FREQ/SPAN/DIV	50 kHz/DIV with 3 kHz bandwidth
Input ATTEN	30
REF Level	-20
10 dB/DIV	Depress
Tuning	STL transmitter center frequency

5. Disconnect the BNC connector from the composite input of the transmitter and adjust the display on the spectrum analyzer so that the waveform is at the top graticule (see Figure 6-5A).

   Reconnect the BNC connector to the composite audio input of the STL transmitter. The display on the spectrum analyzer should be similar to Figure 6-5A.

   Adjust PGM Level Adjust R31 on the Composite Audio Processor module for a Bessel null function of at least -50 dB on the spectrum analyzer.

   Using the METER FUNCTION switch on the STL transmitter, select the PGM LEVEL function. Adjust R3 on the STL transmitter Metering and Status board for a reading of 0 dB on the top scale of the meter.

6. Using the METER FUNCTION switch on the STL receiver, select the RF LEVEL position.

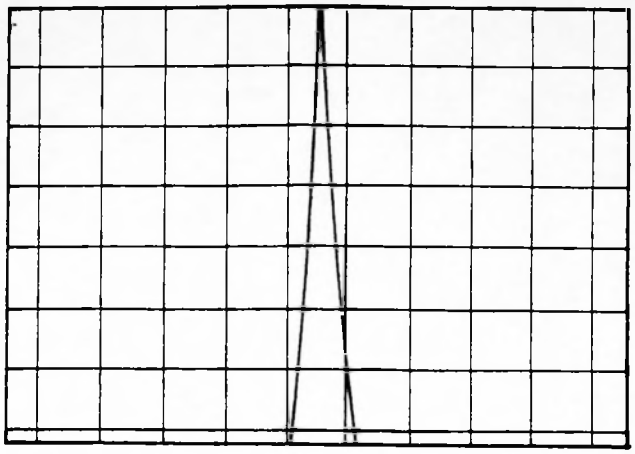

(A)

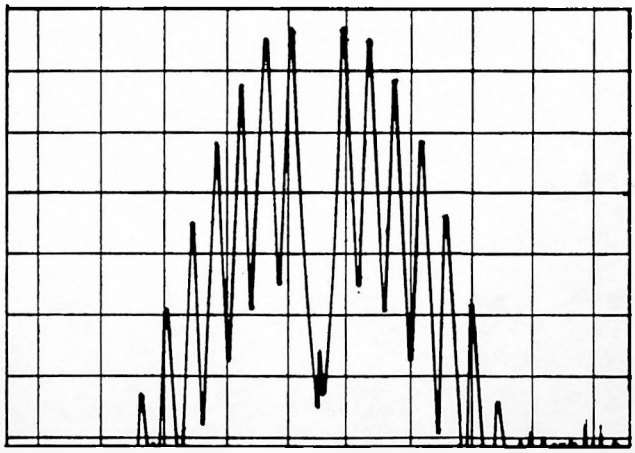

(B)

Vert = 10 dB/Div
Hor = 50 kHz/div and
3 kHz bandwidth

Figure 6-5. Bessel null function waveforms.

Position the switches on the adjustable attenuator for an RF level reading between 1K and 3K V on the receiver meter.

Set the controls on the distortion measurement set as follows:

Meter Function	Reference level
Frequency	1.0 kHz
Meter Input Range	+10 dB

With the oscillator output connected to the STL transmitter, connect the meter input in parallel with the oscillator output and adjust the Relative Adjust for a 0 dB reference on the distortion measurement set. Reconnect the distortion input to the composite output of the STL receiver.

On the receiver FM Demodulator module, adjust Baseband Level Adjust R10 for a reading of 0 dB on the distortion measurement set. Using the receiver METER FUNCTION switch, select the PGM LEVEL position and adjust R1 on the Metering and Status board for a reading of 0 dB on the top scale.

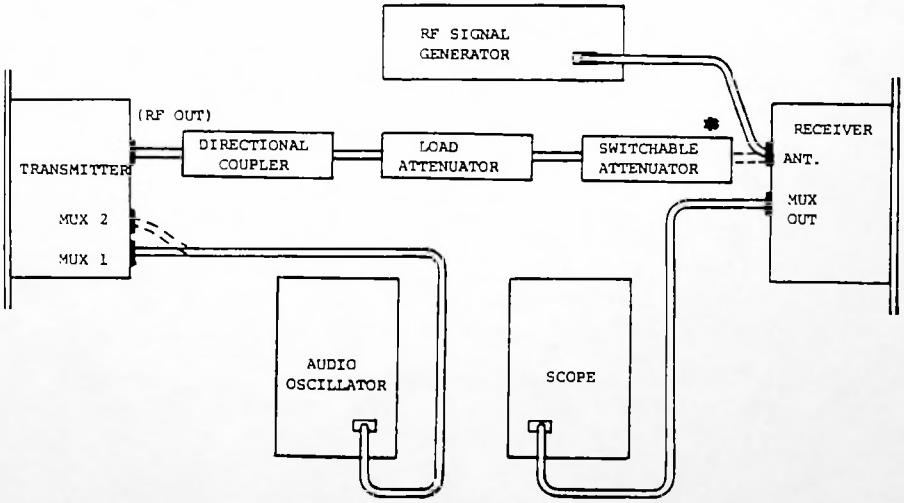

CAUTION: Place the transmitter RADIATE/STANDBY switch in STANDBY until the coupler and attenuator are connected.

*CAUTION: To avoid receiver damage, initially set attenuator for maximum attenuation.

Figure 6-6. Test setup for MUX channel alignment

7. Position the STL transmitter RADIATE/STANDBY switch to the STANDBY position.

Connect the equipment as shown in Figure 6-6, and adjust the controls on the RF signal generator as follows:

Meter Function	FM
AM	Off
Modulation Frequency	110 kHz
FM	INT
Peak Deviation	10 kHz
Range	1024/512 MHz
Output Level	-40
RF	On
Frequency Tune	Tune to the center frequency (specified on serial number label of STL receiver).
Peak Deviation	Adjust FM control for a meter reading of 5 kHz.

While monitoring the oscilloscope, adjust MUX Level Adjust R31 on the STL receiver Composite Baseband Processor module for a reading of 1.5 V p-p.

Using the receiver METER FUNCTION switch, select the MUX LEVEL position.

Adjust R2 on the receiver Metering and Status board for a reading of 5 on the lower scale of the receiver meter.

8. On the RF signal generator, adjust the modulation frequency to 185 kHz and the FM deviation for 7.5 kHz.

Note the reading on the receiver meter. It should be between 6 and 8 on the lower scale. This reading will be used as a reference to align the transmitter MUX 2 deviation. Connect the output of the adjustable attenuator to the RF input of the STL receiver.

9. Position the STL transmitter RADIATE/STANDBY switch to the RADIATE position.

   Using the scope, adjust the output of the audio oscillator for a voltage of 1.5 V p-p, and a frequency of 110 kHz. Connect the audio oscillator output to the MUX 1 input of the STL transmitter.

   Adjust the MUX 1 Level Adjust R28 on the transmitter Composite Audio Processor module for a reading of 5 on the lower scale of the receiver meter.

   Using the transmitter METER FUNCTION switch, select the MUX LEVEL position.

   Adjust R4 on the transmitter Metering and Status board for a reading of 5 on the meter lower scale.

   Connect the audio oscillator to the transmitter MUX 2 input and adjust the oscillator to a frequency of 185 kHz.

   Using the receiver meter as a reference, on the transmitter Composite Audio Processor module, adjust MUX 2 Level Adjust R24 for the reading noted in paragraph 8. The meter reading on the transmitter front panel should be between 6 and 8 on the lower scale.

Troubleshooting:

1. When aligning STL systems as a dual or redundant installation, one STL transmitter should be used as a reference. In this case, the second STL transmitter would be aligned using the first STL receiver as a reference. The second STL receiver would be aligned using the first STL transmitter as a reference. As a final verification, the second STL transmitter would be checked

using the second STL receiver. Using any combination of transmitter and receiver, the composite band should be flat within ±0.1 dB. The results from the multiplex band measurements should be within 10%.

2. Using a single 10.7 MHz I.F. (reference paragraph 6.3.3, Receiver Selectivity) will result in a higher MUX 2 output. In this event, we recommend that the input at the subcarrier demodulator be reduced to compensate for the increase in signal level produced by the STL receiver.

3. The multiplexed output is lowest when the carrier center frequency of the transmitter and receiver are identical. This phenomenon is more pronounced when the STL receiver is in the narrow I.F. mode (2ND 10.7 MHz FIL SEL switch set to IN).

6.3.5 Ultimate Signal-to-Noise Ratio

Typical Values:

Ultimate wideband SNR	65 dB or better
75 Micro-s de-emphasized	76 dB or better

Description:

The STL ultimate wideband (50 Hz to 80 kHz) and 75 Micro-s de-emphasized SNR are verified using a distortion measurement set. Stereo SNR is verified during the stereo separation test (paragraph 6.3.7), and the STL receiver SNR (quieting) is verified during the receiver sensitivity test (paragraph 6.3.2).

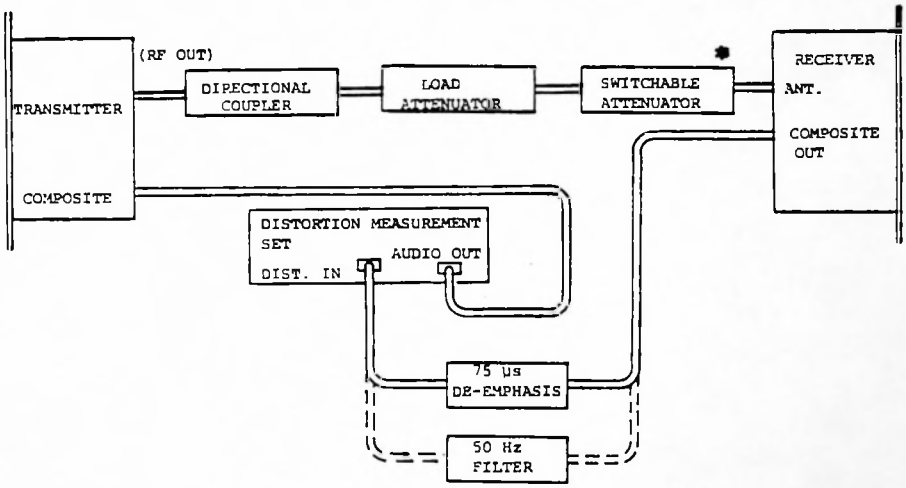

CAUTION: Place the transmitter RADIATE/STANDBY switch in STANDBY until the coupler and attenuator are connected.

*CAUTION: To avoid receiver damage, initially set attenuator for maximum attenuation.

Figure 6-7. Test setup for signal-to-noise ratio measurement.

Test Equipment:

Directional Coupler	Microlab/FXR CB-49N
Attenuator, 50 Ohm Load	Philco, 662A-30
Attenuator, Adjustable	Kay Elemetrics Corp., 432D
Distortion Measurement Set	Hewlett-Packard, HP-339A
50 Hz High Pass Filter	(see Figure 6-15)
75 Micro-s De-emphasis Network	(see Figure 6 16)

Procedure:

1. Connect the equipment as shown in Figure 6-7, and set the controls on the distortion measurement set as follows:

Meter Function	REF Level
Meter Input	+10 dBm
Frequency	400 Hz

2. Set the controls on the STL transmitter as follows:

RADIATE/STANDBY	RADIATE (Radiate LED green)
METER FUNCTION	PGM LEVEL

3. Using the METER FUNCTION switch on the STL receiver, select the PGM LEVEL position.

4. Adjust the oscillator output level on the distortion measurement set for a reading of 0 dB on the top scale of the transmitter meter.

   Rotate the REFERENCE ADJUST on the distortion measurement set for a 10 dB reference on its front-panel meter. Disconnect the composite input at the STL transmitter rear panel.

Using the INPUT RANGE switch on the distortion measurement set, measure the ultimate wideband SNR. (Note: The reference is +10 dB; hence, a meter input range indicating -60 and a meter reading of -6 would indicate an SNR of -76 dB.)

5. Position the INPUT RANGE switch to +10 dB and reconnect the audio input to the STL transmitter composite BNC connector.

   Remove the 50 Hz high-pass filter from the distortion measurement set and replace it with the 75 Micro-s de-emphasis network.

   Rotate the RELATIVE ADJUST on the distortion measurement set for a reference of 10 dB.

   Disconnect the audio input from the STL transmitter composite BNC connector.

   Measure the de-emphasized SNR using the same method described above.

Troubleshooting:

1. If the STL link fails to meet the ultimate SNR specification, the sensitivity test (paragraph 6.3.2) should be performed on the receiver prior to troubleshooting the transmitter.

2. If the STL link fails to meet the SNR specification, and the transmitter is suspected, the following method may be used to help isolate the problem:

   a. Using the 80 kHz filter on the distortion measurement set, measure the output of the Composite Audio Processor module for a reading at least 5 dB greater than specified for the ultimate SNR.

   b. Substitute the first LO signal (1020 MHz) using an RF signal generator such as the HP-8640B at an output level of +10 dBm.

   c. Substitute the FMO signal using the RF signal generator at an RF level of +5 dBm.

NOTE: FMO frequency = First LO frequency minus STL Center frequency.

6.3.6 Distortion Alignment

Specification:

Narrow If	0.3% or less from 30 Hz to 53 kHz. Typically better than 0.1% at 1.0 kHz
Wide IF	0.2% or less from 30 Hz to 53 kHz. Typically better than 0.07% at 1.0 kHz.

Description:

A distortion measurement set is used to align the STL receiver 10.7 MHz IF filter for minimum distortion. This method assumes the FMO will contribute a negligible amount of distortion to the overall reading. The FMO distortion can be verified independently of the receiver by referring to section 6.4B (FMO Synthesizer).

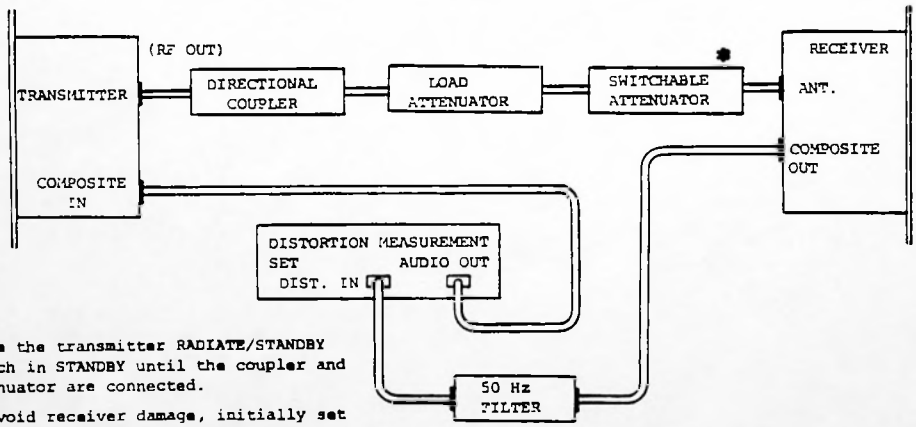

CAUTION: Place the transmitter RADIATE/STANDBY switch in STANDBY until the coupler and attenuator are connected.

*CAUTION: To avoid receiver damage, initially set attenuator for maximum attenuation.

Figure 6-8. STL distortion alignment

Test Equipment:

Directional Coupler	Microlab/FXR CB-49B
Attenuator, 50 Load	Philco, 662A-30
Attenuator, Adjustable	Kay Elemetrics Corp., 432A

Procedure:

1. Connect the equipment as shown in Figure 6-8, and adjust the controls on the distortion measurement set as follows:

Meter Function	Input level
Filters	400 Hz - In
	80 kHz - In
Distortion Range	0.3%
Input Range	+10 dB
Frequency	1.0 kHz
Oscillator Level	1.25 V rms (3.5 V p-p)

2. Position the RADIATE/STANDBY switch on the STL transmitter to the RADIATE position. The RADIATE status LED should be green. Using the METER FUNCTION switch on the transmitter, select the FWD POWER position and verify that the meter reads between -3 and +2 dB on the top scale.

   Using the METER FUNCTION switch on the transmitter, select the PGM LEVEL function and verify that the meter reads between -1 and +1 dB on the top scale.

3. Using the METER FUNCTION switch on the STL receiver, select the RF LEVEL function.

Position the switches on the adjustable attenuator for a reading between 1k and 3k Micro-V on the middle scale of the receiver meter.

Using the METER FUNCTION switch on the receiver, select the PGM LEVEL function. The meter should read between -1 and +1 dB on the top scale.

Set the frequency to 15 kHz and verify that the meter of the distortion measurement set reads between 1.2 and 1.3 Vac rms.

Adjust the METER FUNCTION switch on the distortion measurement set to the DISTORTION position.

4. Position the 2ND 10.7 MHz FIL SEL switch to the OUT position on the receiver Double Converter module. Using the distortion measurement set, adjust the following controls on the Double Converter module and the Second and Third Local Oscillator module for minimum distortion:

   a. 1ST 10.7 MHz IF ADJ

   b. LO 2 FREQ ADJ

   NOTE: If the STL receiver is being operated in the wideband mode, this completes the distortion alignment. The reading on the distortion meter should now be less than 0.13%. Switch the frequency on the distortion measurement set to 1.0 kHz and verify that the reading is less than 0.10%.

5. On the Double Converter modules, switch the 2ND 10.7 MHz FIL SEL switch to the IN position.

   Rotate the 2ND 10.7 MHz IF ADJ for a minimum reading on the distortion measurement set.

   The distortion reading should now be less than 0.2%. Switch the frequency on the distortion measurement set to 1.0 kHz. Verify that the distortion reading is less than 0.1%.

   NOTES: The above procedure ensures that the STL

link may be used in either the narrow- or wide-band position. If the STL receiver is to be used exclusively in the narrow-band position, steps 4 and 5 may be repeated two to three times to optimize the distortion reading.

Troubleshooting:

1. The following procedure may be used to determine if the 10.7 MHz filters are a source of high distortion:

   a. Remove FL-1 from the receiver Double Converter module and replace it with a 1.0 k Ohm resistor. The resistor leads should first be cut between 0.3 and 0.4 inch from the body. The ends of the resistor leads should then be flattened using a pair of needle-nose pliers so they can be inserted in the FL-1 socket. The cover should then be replaced and the screws tightened.

   b. Position the 2ND 10.7 MHz FIL SEL switch to the OUT position.

   c. Using the distortion measurement set, the distortion reading should now be less than 0.05% at 15 kHz. If it is not, additional troubleshooting will be required prior to determining the performance of the 10.7 MHz IF filters.

2. An RF input to the STL receiver exceeding 6 mV may cause an indication of high distortion.

3. The distortion of the Composite Baseband Processor module in the receiver can be tested independently by applying the output of the distortion measurement set's audio oscillator to the input of the Composite Baseband Processor module.

6.3.7 Stereo Separation and Stereo Signal-to-Noise Ratio

Specification:

Separation	48 dB or better from 50 Hz to 15 kHz (typically 50 dB or better)
Signal-to-Noise Ratio	72 dB or better (typically 75 dB or better).

Description:

The stereo separation alignment is accomplished using a stereo generator and demodulator of known quality, and an audio spectrum analyzer with tracking generator.

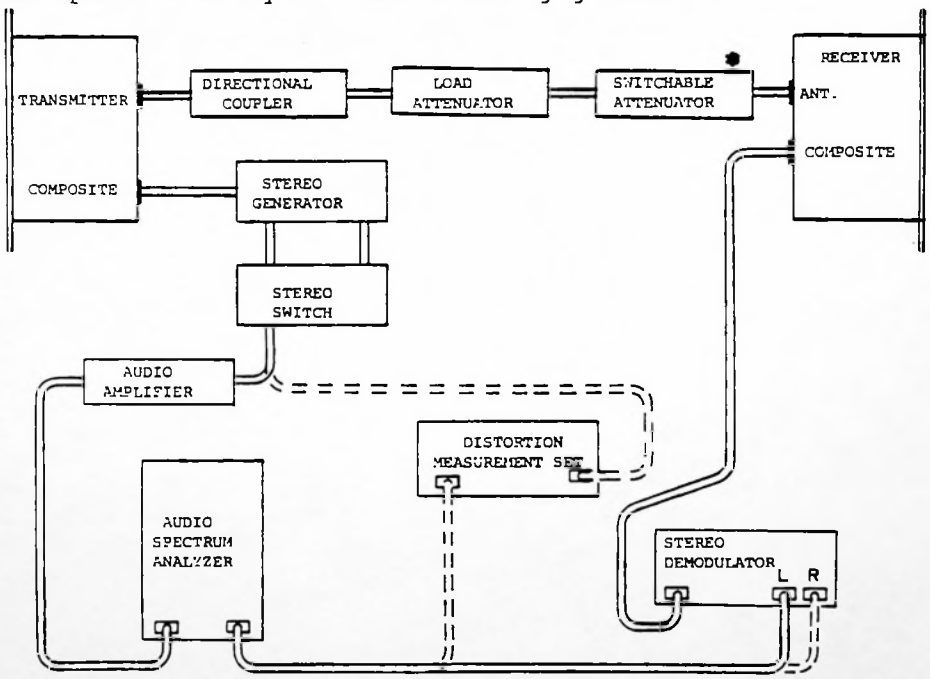

CAUTION: Place the transmitter RADIATE/STANDBY switch in STANDBY until the coupler and attenuator are connected.

*CAUTION: To avoid receiver damage, initially set attenuator for maximum attenuation.

Figure 6-9. Stereo separation test setup

Test Equipment

Directional Coupler	Microlab/FXR CB-49N
Attenuator, 50 Ohm Load	Philco, 662A-30
Attenuator, Adjustable	Kay Elemetrics Corp., 432D
Distortion Measurement Set	Hewlett-Packard HP-330A
Spectrum Analyzer	Tektronics 7L5 with Option 01, and Main Frame
Audio Amplifier	See Figure 6-17
Stereo Generator	RCA BTS-101A
Stereo Demodulator	QEI Model 691
Stereo Source Selector	See Figure 6-18

Procedure:

1. Connect the equipment as shown in Figure 6-9. This test should be run flat; i.e., the stereo generator pre-emphasis and the stereo demodulator de-emphasis should be switched out. If this cannot be accomplished, the system modulation reference level should be reduced to -20 dB at 400 Hz. Adjust the controls on the audio spectrum analyzer as follows:

Frequency	Far left graticule
Dot Frequency	Zero Hz
LOG	10 dB/DIV
Source	FREE RUN
Mode	NORM
Terminate	1 M Ohm
REF	dBV

Resolution	Coupled
SPAN/DRV	2 kHz
Time/DIV	Auto
Tracking GEN	ON

2. Set the RADIATE/STANDBY switch on the STL transmitter to the RADIATE position. Verify that the RADIATE LED is green.

   Using the METER FUNCTION switch on the transmitter, select the FWD POWER position. Verify that the meter reads between -3 and +2 dB on the top scale.

   Using the METER FUNCTION switch on the transmitter, select the PGM LEVEL position.

   Adjust the dot frequency on the audio spectrum analyzer to 1.0 kHz, and the SPAN/DIV to zero.

   Adjust the level control on the audio spectrum analyzer for a reading of zero dB on the top scale of the transmitter meter.

   Set the dot frequency on the audio spectrum analyzer to zero and the SPAN/DIV to 2 kHz.

   Using the METER FUNCTION switch on the receiver, select the RF LEVEL position.

   Position the switches on the adjustable attenuator for a reading between 1K and 3K on the receiver meter middle scale.

   Using the METER FUNCTION switch on the STL receiver, select the PGM LEVEL position. Verify that the meter reads within ±1 dB of the STL transmitter meter.

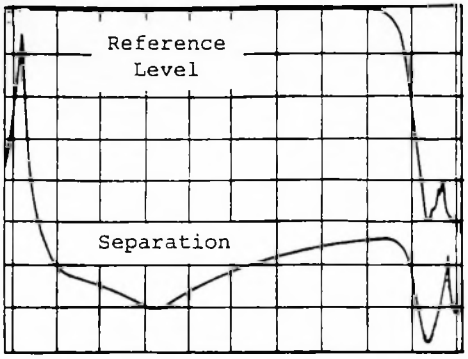

Stereo separation: Measurement of the worst-case ratio in dB of residual signal in the stereo demodulated right channel referred to the demodulated left channel with a left-only driving signal for frequencies between 30 Hz and 15 kHz; the procedure is repeated for right to left channel separation.

Vert = 10 dB/div Hor = 2 kHz/div.

Figure 6-10. Swept separation waveform.

3. Select the LEFT ONLY position on the stereo source selector.

   Adjust the step and VAR attenuators on the audio spectrum analyzer so that the waveform is at the top graticule. (See Figure 6-10.)

   Select the RIGHT ONLY position on the stereo source selector.

   Adjust HF TILT ADJ R10 on the receiver Composite Baseband Processor module for maximum separation between 1 and 5 kHz.

   Adjust EQ ADJ R25 on the Composite Baseband Processor module for maximum separation between 10 kHz and 15 kHz. (See Figure 6-10.)

   Using the SAVE A function on the audio analyzer, store this waveform.

   Verify that the separation is greater than 48 dB between 1 kHz and 15 kHz.

4. Connect the spectrum analyzer to the right output of the stereo demodulator.

Select the RIGHT ONLY position on the stereo source selector. Adjust the step and variable attenuators on the audio spectrum analyzer so that the waveform is at the top graticule. (See Figure 6-10.)

Select the LEFT ONLY position on the stereo source selector. Verify that the separation is greater than 48 dB between 1 kHz and 15 kHz.

Note: The HF TILT ADJ and Delay EQ ADJ on the Composite Baseband Processor module affect both the left and right channel separation. Paragraphs 3 and 4 may be repeated to assure optimum performance on both channels.

5. Connect the audio output of the distortion measurement set to the stereo source selector. Connect the left output of the stereo demodulator to the input of the distortion measurement set.

   Set the frequency on the distortion measurement set to 1 kHz. Select the LEFT + RIGHT position on the stereo source selector.

   Adjust the output level on the distortion measurement set for a reading of zero dB on the top scale of the STL transmitter. Using the METER FUNCTION switch on the STL receiver, select the PGM LEVEL position and verifythat the meter reads within ±1 dB of the transmitter program level.

   Adjust the input controls on the distortion measurement set for a zero dB reference.

   Set the frequency on the distortion measurement set to 30 Hz.

   Verify that the reference on the distortion measurement set is ±0.5 dB.

   Select the RIGHT ONLY position on the stereo source selector. Using the input attenuator on the distortion measurement set, measure the separation.

   Adjust LF TILT ADJ R18 on the Composite Baseband Processor module for maximum separation.

   Verify the separation at 50, 100 and 500 Hz.

6. Connect the input of the distortion measurement set to the right channel of the stereo demodulator.

   Position the input range and relative ADJ controls on the distortion measurement set for a zero dB reference.

   Select the RIGHT ONLY position on the stereo source selector and, if required, adjust the zero dB reference on the distortion measurement set.

   Select the LEFT ONLY position on the stereo source selector.

   Using the input range controls on the distortion measurement set, measure the right channel separation.

   Note: The low-frequency tilt adjust on the Composite Baseband Processor module affects both channels. Paragraphs 5 and 6 may be repeated several times to optimize this setting.

7. Stereo signal-to-noise ratio. This test should be run using the normal 75 Micro-s de-emphasis characteristics of the stereo demodulator.

   Connect the audio output of the distortion measurement set to the stereo source selector.

   Set the stereo source selector to the LEFT + RIGHT position.

   Using the 50 Hz high-pass filter, connect the left channel of the stereo demodulator to the distortion measurement set input.

   Using the METER FUNCTION switch on the STL transmitter, select the PGM LEVEL position.

   Adjust the output of the audio oscillator on the distortion measurement set for a frequency of 400 Hz.

   Adjust the output level on the distortion measurement set so that the transmitter meter reads zero dB on the top scale.

Using the METER FUNCTION switch on the receiver, select the PGM LEVEL position, and verify that the meter reads within ±1 dB of the transmitter meter.

Adjust the input range and relative ADJ controls on the distortion measurement set for a zero dB reference on its meter.

Position the stereo source selector to the OFF position.

Measure the stereo demodulated signal-to-noise ratio for the left channel using the input range control on the distortion measurement set. This value should be greater than 72 dB.

Using the 50 Hz high-pass filter, connect the input of the distortion measurement set to the right channel, and repeat the test.

Troubleshooting:

The performance of the stereo generator and stereo demodulator can be verified by connecting the output of the stereo generator directly to the input of the stereo demodulator.

6.3.8 Stereo Crosstalk

Specification:

Subchannel to main channel	50 dB or better
Main channel to subchannel	50 dB or better

Description:

The crosstalk measurements are made using a stereo generator of known quality, a low-distortion audio oscillator, and an audio spectrum analyzer.

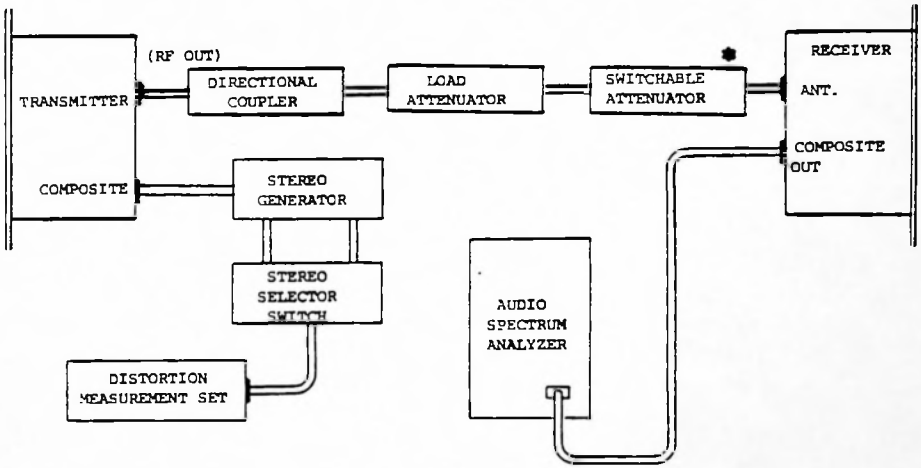

CAUTION: Place the transmitter RADIATE/STANDBY switch in STANDBY until the coupler and attenuator are connected.

*CAUTION: To avoid receiver damage, initially set attenuator for maximum attenuation.

Figure 6-11

Stereo Crosstalk Setup

Test Equipment:

Directional Coupler	Microlab/FXR CB-49N
Attenuator, 50 Ohm Load	Philco 662A-30
Attenuator, Adjustable	Kay Elemetrics Corp., 432D
Distortion Measurement Set	Hewlett-Packard HP-339A
Audio Spectrum Analyzer	Tektronix 7L5
Stereo Source Selector	(See Figure 6-18)
Stereo Generator	RCA BTS-101A

Procedure:

1. Connect the equipment as shown in Figure 6-11. This test should be run with the stereo generator pre-emphasis switched out.

2. Set the RADIATE/STANDBY switch on the STL transmitter to the RADIATE position. The RADIATE status LED should be green.

   Using the METER FUNCTION switch, select the FWD POWER position, and verify that the meter of the STL transmitter reads between -3 and +2 dB on the top scale.

   Using the METER FUNCTION switch on the transmitter, select the PGM LEVEL position.

   Adjust the frequency controls on the distortion measurement set for a value of 15 kHz.

   Adjust the oscillator output level on the distortion measurement set so that the transmitter meter reads zero dB on the top scale.

3. Using the METER FUNCTION switch on the STL receiver, select the RF LEVEL position.

Position the switches of the adjustable attenuator so that the receiver meter reads between 1K and 3K on the middle scale.

Using the METER FUNCTION switch on the receiver, select the PGM LEVEL position. Verify that the receiver meter reads between -1 and +1 dB on the top scale.

4. Position the controls on the audio spectrum analyzer as follows:

DOT MAR	Dot on far left graticule
DOT FREQUENCY	Zero Hz
LOG	10 dB/DIV
SOURCE	Free run
MODE	NORM
RESOLUTION	Coupled
SPAN/DIV	5 kHz
TIME/DIV	AUTO
TERMIN Z	1 M Ohm
REF	dBV

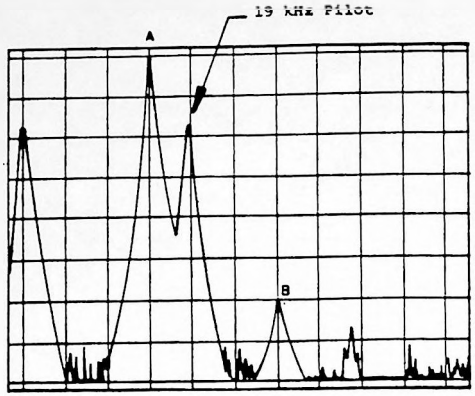

A = 15 kHz L+R Ref. level.
B = 2nd harmonic distortion level at 30 kHz.

Nonlinear crosstalk main to sub = the difference in dB between level A and level B (60 dB in this example).

Vert = 10 dB/div Hor = 5 kHz/div

(A) Nonlinear crosstalk, main to sub.

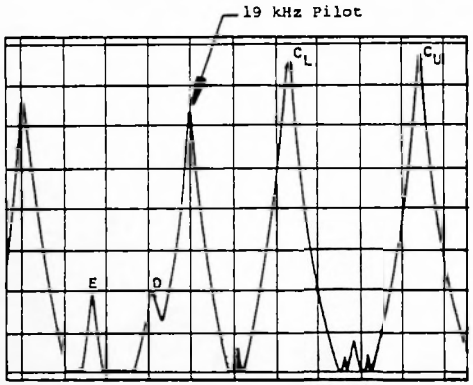

C_L and C_u = lower and upper L-R sideband level at 30.5 kHz and 45.5 kHz.

D = intermodulation product at 15 kHz.

E = linear (vector) crosstalk at 7.5 kHz. This signal is a product of the stereo generator.

Nonlinear crosstalk sub to main = the difference in dB between level C_L or C_u and level D + 6 dB (60 dB in this example).

Vert = 10 dB/div Hor = 5 kHz/div

(B) Nonlinear crosstalk, sub to main.

Nonlinear crosstalk: Measurement of the ratio in dB of harmonic products in the subchannel referred to 15 kHz L+R at 100% modulation in the main channel (M+S): measurement of the ratio in dB of intermodulation products in the main channel referred to 7.5 kHz L-R at 100% modulation in the subchannel (S+M).

Figure 6-12

Nonlinear Crosstalk

5. Measure the stereo crosstalk as follows:

   a. Using the attenuator on the audio spectrum analyzer, adjust the 15 kHz waveform to the top graticule. (See Figure 6-12A.)

   b. Calculate the main channel to subchannel crosstalk by measuring the indicated waveforms and using the formula shown in Figure 6-12A. This value should be greater than 50 dB.

   c. Adjust the frequency of the distortion measurement set to 7.5 kHz.

   d. Position the stereo source selector (Figure 6-18) to the left minus right position.

   e. Calculate the subchannel to main channel crosstalk by measuring the indicated waveforms and using the formula shown in Figure 6-12B. This value should be greater than 50 dB.

Troubleshooting:

1. The stereo generator's performance can be verified by connecting output to the input of the audio spectrum analyzer and performing the tests specified in step 5 above.

2. If the STL link is identified as the source of excessive stereo crosstalk, the following steps should be taken:

   a. Verify that the cover is on the RF amplifier, and install the covers on the STL transmitter and receiver using at least two screws.

   b. Ensure that the STL transmitter and receiver are more than 2 feet apart.

   c. Verify that distortion is less than 0.2%, using the procedure shown in paragraph 6.3.6.

6.4 MODULE ADJUSTMENTS

This subsection is intended to

1. Provide additional technical information
2. Assist during alignment troubleshooting
3. Assist during module replacement.

The modules are discussed in the same order used in Section 5. Also included are adjustment instructions to be used during troubleshooting, module repair, or module replacement for the following modules:

FMO Synthesizer

First Local Oscillator and Multiplier

RF Amplifier

Metering and Status (Transmitter)

Double Converter

Metering and Status (Receiver)

6.4.A Composite Audio Processor

PGM LVL ADJ	Program Level Adjustment. Sets the transmitter deviation of the composite signal. Normal input is 3.5 V p-p. The normal deviation of the transmitter is ±50 kHz.
MUX 1 LVL ADJ	Multiplex 1 Level Adjustment. Sets the transmitter Multiplex 1 deviation. The normal input is 1.5 V p-p at 110 kHz. Main carrier deviation normally is ±5 kHz.
MUX 2 LVL ADJ	Multiplex 2 Level Adjustment. Sets the transmitter deviation for the Multiplex 2 input. The normal input is 1.5 V p-p at 185 kHz. Main carrier deviation normally is ±7.5 kHz.
OUT LVL TP1	Output Level Test Point. Used to monitor the baseband audio input to the FMO. The signal includes both the composite and multiplex levels. 3.5 V p-p = ±50 kHz deviation.
A/B SWITCH (Internal)	Switch used to select the phase of the modulation. When used with a PCL-606 receiver, the "B" position is used for in-phase modulation, and the "A" position will result in modulation 180° out of phase with the input.

6.4.B FMO Synthesizer

FREQ TRIM	Frequency Trim Adjustment. Used to tune the reference oscillator. The frequency switching described below adjusts the frequency in 10 kHz increments. This adjustment is used as a vernier between those 10 kHz increments.
LOSS OF LOCK	This LED gives a red indication when the AFC loses lock.
AFC LVL TP1	AFC Level Test Point. Monitors the dc level of the AFC loop. It is normally set to +7 V.
A = VARICAP BIAS ADJ	Varicap Bias Adjustment. Used to adjust the FMO for minimum distortion.
TP2 = VARICAP BIAS LVL	Varicap Bias Level Test Point. A dc test point used to monitor the bias on the Varicap.
B = DISTORTION ADJ	This circuit is disabled.
MODULATION ADJ	Modulation Adjustment. Used to set the FMO deviation. It is normally set to ±50 kHz with 3.5 V p-p input.
AFC LVL ADJ	AFC Level Adjustment. Sets the free run oscillator frequency. Rotating it clockwise causes the frequency to decrease. The final adjustment is made by monitoring TP1 (above) to a value of +7 V.
FMO LVL TP3	FMO Level Test Point. A dc test point used to monitor the output of the FMO oscillator.

Frequency Selector Switches (Internal):

S1: Tens of Megahertz

S2: Megahertz

S3: Hundreds of kilohertz

S4: Tens of kilohertz

FMO Adjustment:

Test Equipment

RF Signal Generator	HP-8640B
Mixer	Mini-Circuit 2AD-1
Adjustable Attenuator	Kay Elemetrics Corp., 432B
RF Spectrum Analyzer	HP-8559A
Distortion Measurement Set	HP-339A
50 Hz Filter	Figure 6-15
Counter	Tektronix BC-508A
Multimeter	Data Precision 935
Power Meter	HP-435A with 8481A Power Sensor

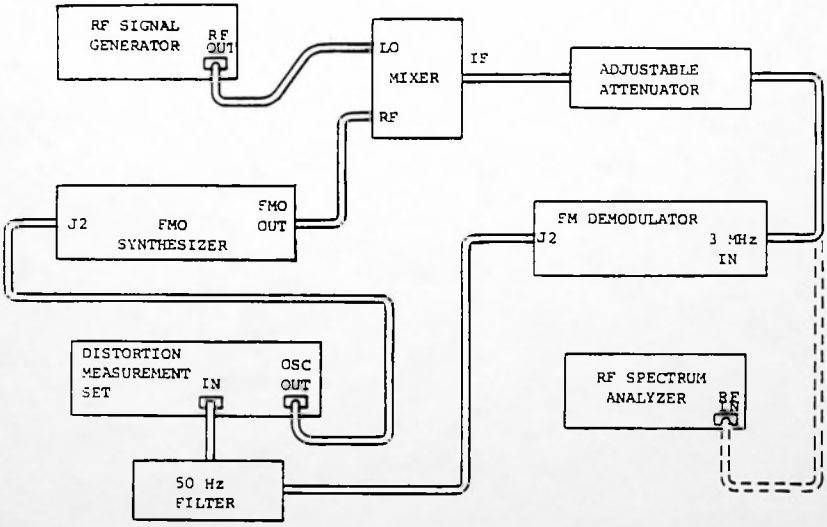

Figure 6-13. Test setup for FMO adjustment.

Procedure:

1. Connect the equipment as shown in Figure 6-13.

   Using the counter, measure the output frequency of the FMO.

   FMO frequency equals 1020 MHz minus transmitter frequency.

   Note: If the frequency is greater than 10 kHz away from the desired frequency, remove the top cover and position frequency selector switches S1 through S4 for the desired frequency.

   Adjust the frequency trim on the FMO so that the counter reads the desired frequency.

   Note: If the FMO LOSS OF LOCK is red, it will be necessary to first adjust the AFC level to accomplish this step. See Step 4 below.

   Reconnect the FMO output to the RF input of the mixer.

2. Adjust the controls on the RF signal generator for a frequency that is 3 MHz above the FMO frequency and for an output of +10 dBm.

   Using the RF spectrum analyzer, position the switches on the adjustable attenuator for an output level of between -20 and -25 dBM at 3 MHz.

   Reconnect the adjustable attenuator to the FM demodulator.

3. Adjust the oscillator output on the distortion measurement set for a frequency of 1 kHz and a level of 1.25 V rms (3.5 V p-p).

4. Distortion and AFC Level Alignment.

   Using the multimeter, monitor TP1 (AFC Level) and adjust the AFC LVL ADJ so that the voltmeter reads between 6.9 and 7.1 V.

Using the distortion measurement set, verify that the output of the FM demodulator is between 1.0 and 1.5 V rms.

Measure the distortion of the output of the FM demodulator, and adjust the Varicap Bias adjustment on the FMO (adjustment A) for a minimum distortion reading.

Note: Normally there are two setting of the Varicap Bias adjustment that will produce minimum distortion. Varicap bias should be adjusted to the setting that produces the lowest distortion.

Readjust the AFC LVL ADJ so that the voltmeter reads between 6.9 and 7.1 V.

Repeat this procedure until the varicap bias is set for minimum distortion and the AFC level adjustment is between 6.9 and 7.1 V.

Set the frequency on the distortion measurement set for 15 kHz and verify that the distortion is less than 0.05%.

5. Modulation Level.

Using the counter, set the output frequency of the distortion measurement set oscillator to 20.78 kHz. Verify that the oscillator output voltage is 1.25 V rms.

Adjust the FMO deviation for ±50 kHz as follows, using the Bessel null function waveforms in Figure 6-5:

a. Connect the output of the adjustable attenua- to the RF spectrum analyzer and disconnect the audio input from the FMO. Establish the reference level shown in Figure 6-5A on the RF spectrum analyzer.

b. Reconnect the audio from the distortion measurement set to the FMO and adjust the MODULATION ADJ on the FMO from minimum to the first Bessel null function (Figure 6-5B).

6. Reconnect the adjustable attenuator to the FM demodulator.

   Verify that the AFC level at TP1 is between 6.9 and 7.1 V.

   Verify that the distortion at 15 kHz is less than 0.05%.

   Repeat Steps 3 through 5 of this procedure as required to achieve the above results.

7. Using the Power Meter, verify that the output of the FMO is between 0 dB and +5 dB.

Notes:

A. S1, S2, S3 and S4 are used to set the FMO frequency between 60 and 80 MHz.

B. The FM distortion is normally adjusted using a mixer and FM demodulator of known quality. The quality of the FM demodulator can be verified as follows:

   i. Set the signal generator (mixer LO) frequency 3.000 MHz above the FMO (mixer RF) frequency and measure the distortion.

   ii. Set the signal generator (mixer LO) frequency 3.000 MHz below the FMO (mixer RF frequency and measure the distortion.

   iii. The FM demodulator distortion is equal to the absolute value of measurement (i) minus measurement (ii). The difference should be less than 0.02%.

C. If ordering a replacement FMO from the factory, please specify the operating frequency of the transmitter.

6.4.C Up Converter

This module includes a mixer, 950 MHz filter, and IPA amplifier.

Mixer: The mixer requires no adjustment.

950 MHz Filter: The insertion loss of the filter is between 2 to 3 dB between 940 MHz and 960 MHz. It is designed to provide an additional 30 dB of attenuation of the first LO signal, normally 1020 MHz, and greater than 60 dB of the upper sideband, normally 1080 MHz to 1100 MHz. All adjustments are internal and considered to be factory adjustments.

IPA (Intermediate Power Amplifier): C1 (internal is adjusted for maximum power output. With an input of -10 dBm, the output should be between +19 and +21 dBm between 940 MHz and 960 MHz.

6.4.D First Local Oscillator and Multiplier

FREQ	Frequency Adjust. Sets the first LO output frequency.
OSC LVL TP1	Oscillator Level Test Point. Provides a dc voltage used to verify that the oscillator is functioning.
1ST DBLR TUNE	First Doubler Tune Adjustment. Used to tune maximum dc potential at TP2 (1st Doubler Level).
1ST DBLR LVL	First Doubler Level Test Point. Provides a dc voltage used to verify that the 1st doubler is functioning.
2ND DBLR MATCH	Second Doubler Match Adjustment. Used to tune for maximum dc voltage at TP2 (1st Doubler Level).
2ND DBLR TUNE	Second Doubler Tune. Used to tune for maximum dc voltage at TP3 (2nd Doubler Level).
2ND DBLR LVL TP3	Second Doubler Level Test Point. A dc test point used to verify that the second doubler is functioning.
DIO DRVR	Diode Drive Tune Adjustment. Used to tune for maximum power output.
DIO MATCH	Diode Match Adjustment. Used to tune for maximum power output.
DIO BIAS TP4	Diode Bias Test Point. A dc test point used to verify that the step recovery diode is properly biased (0.4 to 0.8 V).

Notes: When installed in the PCL-606 STL transmitter, the frequency output of this module should be 1020 MHz with a power output between +5 and +10 dBm. This measurement should be made on a low-power wattmeter.

6.4.E RF Amplifier

C706	Input match adjustment
C707	Input match adjustment
C709	First interstage match adjustment
C712	Second interstage match adjustment
C724	Output match adjustment
C725	Third interstage match adjustment
C728	Second harmonic suppression adjustment

RF Amplifier Alignment

1. Set the HP-8640B signal generator (or equivalent) to center frequency at a power level of -10 dBm.

2. Connect the output of the signal generator to the input of the Intermediate Power Amplifier (IPA).

3. Connect the output of the RF Amplifier to an appropriate power meter.

4. Set the deviation of the signal generator to 5 MHz.

5. Note: When tuning the RF Amplifier, the final output current should be monitored from the meter PA CURRENT position for a maximum of 1.7 A.

6. Adjust C706, C707, C709, C712, C725 and C724 for maximum power while keeping the final stage current below 1.7 A.

   Note: Final stage current is adjusted by C724.

7. Spurious and second harmonic emissions should be monitored by using a 30 dB coupler and spectrum analyzer. If the second harmonic needs to be "tuned out", adjust C728 so that the second harmonic is greater than:

   -10 P out + 43 dB

6.4.F Metering and Status

R1 Used to adjust the FWD POWER meter function. 0 dB = 100% power (5 to 10 watts).

R2 Adjusts the REFL POWER meter function. Adjust to 0 dB with the antenna disconnected.

R3 Used to adjust the PGM LEVEL meter function. 0 dB equals 50 kHz deviation.

R4 Used to adjust the MUX LEVEL meter function. 5 on the lower scale equals 5 kHz deviation of the main carrier by the subcarrier.

R5 Used to adjust the AFC LEVEL meter function. 7 volts equals midscale on the lowest arc.

R6 Used to adjust the IPA LEVEL meter function. Adjust to midscale on the lower arc when the IPA is producing between 19.5 and 21.0 milliwatts of power.

R7 Used to adjust the PA CURRENT meter function. Using a digital voltmeter with a floating input, measure the differential voltage between TP1 and TP2 on the Transmitter Control board when the transmitter is in the RADIATE position. The power amplifier final current is then equal to ten times this value. R7 is then adjusted so that the lower scale of the meter will indicate a value 100 times the value indicated by the digital voltmeter.

R8 Used to adjust the VOLTMETER function of the meter. Using a jumper, connect TP1 of the Metering and Status board to TP2 of the power supply and adjust R8 for a value of 15 on the lower scale.

R9 Adjusts the meter ballistics. The meter is normally adjusted for a 0.25 dB overshoot by switching between the REFL POWER meter function and the PGM LEVEL meter function with a 0 dB input (program input = 3.5 V p-p or 1.25 V rms).

6.4.G Transmitter Control

TP1	A dc test point used to measure the relative forward power.
TP2	TP2 and TP3 are used to monitor the power amplifier final output current. The measurement is made using a floating input dc voltmeter. Ten times the voltage measured equals the current of the final stage in the RFA amplifier.
TP3	See TP2 above.

6.4.H Power Supply

R5	Used to adjust the +12.5 V power supply output voltage when the transmitter is in the RADIATE position.

6.4.I Preselector Filter

The five tuning elements on the STL receiver preselector are aligned at the factory using a return loss technique. Attempting to tune the preselector for insertion loss only generally results in degraded performance of the STL receiver.

Measuring the STL receiver noise performance (paragraph 6.3.2) is an indirect method of verifying the preselector performance.

An insertion loss greater than 2 dB is an indication that the preselector is failing to meet its performance criteria. When making this measurement, care should be taken to ensure that the cables do not adversely affect the measurements. Figure 6-14 shows the proper method of measuring the preselector insertion loss.

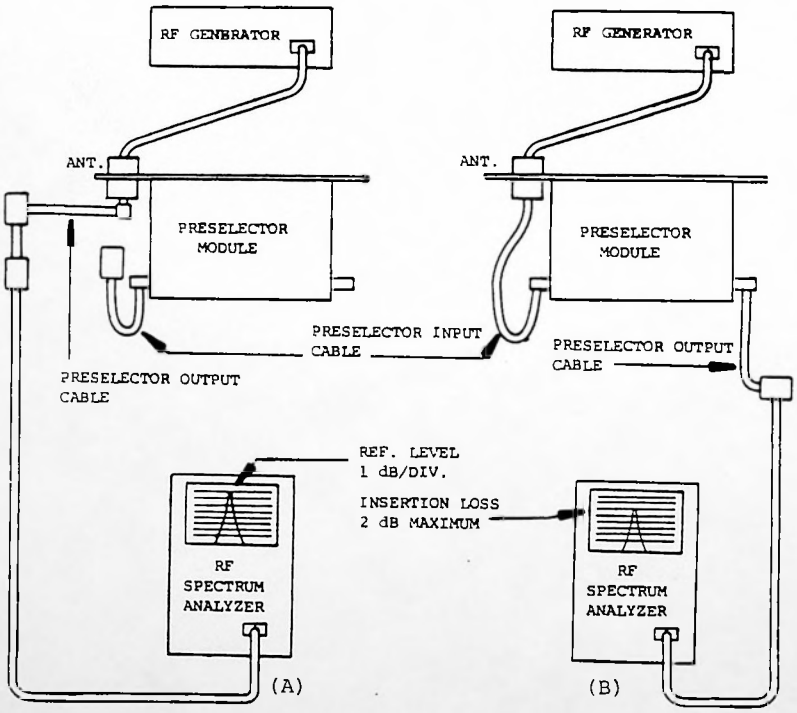

Figure 6-14. Test setup for measuring the preselector insertion loss.

6.4.J Preamplifier and First Mixer

70 MHz OUT ADJ

70 MHz Output Adjustment. Alignment is performed using an RF signal generator and the receiver front-panel meter in the RF LEVEL position.

Set the RF Signal Generator as follows:

Frequency	As specified on the serial number label.
FM Deviation	OFF
RF Level	Set to 300 to 1K on the middle scale of the STL receiver meter.

Adjust the 70 MHz OUT ADJ (L3) for maximum receiver meter indication. NOTE: Greater accuracy can be achieved by monitoring the rear panel MTR OUT (meter output) terminal with a dc voltmeter.

RF GAIN LVL TP1

RF Gain Level Test Point. Used to monitor the negative dc voltage on the pin diode attenuator.

RF GAIN ADJ

RF Gain Adjustment. During servicing and alignment, this adjustment is set for a reading between -14 V and -16 V on TP1 (RF Gain Level).

When installed at the Broadcast Transmitter site, this adjustment may range between 0 and 15, as indicated on the STL receiver meter lower range when the RF GAIN function is selected.

6.4.K First Local Oscillator and Multiplier

Determine the STL receiver first LO output as follows:

Receiver frequency + 70 MHz = first LO frequency

The adjustments for the receiver First Local Oscillator and Multiplier module are identical to those specified in Paragraph 6.4.D for the transmitter First Local Oscillator and Multiplier module.

6.4.L Double Converter

Note: The 10.7 MHz IF is adjusted for minimum distortion at the desired selectivity.

2ND 10.7 MHz	Filter Select Switch. IN = narrow band performance; OUT = wideband performance. In general, the narrow band (IN) position is selected when strong adjacent channels exist within 1 MHz of the STL operating frequency. In the OUT position, the 2nd 10.7 MHz IF filter and adjustment are disabled.
1ST 10.7 MHz IF ADJ	IF Adjustment. Adjust for minimum distortion.
2ND 10.7 MHz IF ADJ	IF Adjustment. Adjust for minimum distortion.

Note: The LO2 FREQ ADJ on the second and third Local Oscillator module and the first 10.7 MHz IF ADJ and second 10.7 MHz IF ADJ on the Double Converter module interact. See paragraph 6.3.6, Distortion Alignment, for additional information.

If the STL receiver is being repaired by installing a factory-aligned Double Converter module, acceptable performance should be obtained by aligning the LO2 FREQ ADJ on the second and third Local Oscillator module to the frequency specified on the Double Converter module.

70 MHz BPF ADJ (1 to 4)	Bandpass Filter Adjustments. The alignment of the 70 MHz bandpass filter can be checked indirectly by verifying the receiver noise performance to within 20 Micro-V of the value specified on the final test data sheet included in this manual. (See paragraph 6.3.2, STL Receiver Sensitivity).

70 MHz Bandpass Filter Alignment

1. Substitute a 1 k Ohm resistor for FL1 as follows:

   Remove the top cover of the Double Converter module. To aid reinstallation, note the position of the number 1 on FL1, and remove FL1.

   Install a 1 k Ohm resistor in the FL1 socket by trimming the resistor leads 0.3 to 0.4 inch beyond the resistor body length and flattening both ends of the resistor leads with a pair of long-nose pliers so they fit into the socket.

2. Set the second 10.7 MHz FIL SEL switch to the OUT position.

3. Connect the RF signal generator (HP-8640B of equivalent) to the 70 MHz input of the Double Converter module.

   Set the following:

   Frequency to 70.000 MHz

   RF level to -37 dB

   FM deviation to 1 MHz

4. Using a digital voltmeter, monitor TP3 (Log Level) on the FM Demodulator module.

5. Reinstall the top cover of the Double Converter module and secure the screws.

6. Adjust the 70 MHz BPF ADJ (1-4) capacitors for a maximum reading on the digital voltmeter. Repeat this step two or three times to ensure a maximum reading.

7. Reinstall FL1 as follows:

   Remove the top cover from the Double Converter module.

Remove the 1 k Ohm resistor from the FL1 position.

Reinstall FL1 in the orientation previously noted.

Reinstall the Double Converter module top cover and secure the screws.

8. After alignment of the 70 MHz bandpass filter, both the STL receiver sensitivity (paragraph 6.3.2) and the STL link distortion (paragraph 6.3.6) alignment procedures should be performed.

6.4.M Second and Third Local Oscillator

LO2 FREQ ADJ	LO2 Frequency Adjust. Adjusts the LO2 frequency between 80.670 kHz and 80.730 kHz. Exact frequency for the purpose of alignment is determined by the 10.7 MHz IF. The exact frequency used during factory alignment is indicated on the Doubler Converter module and is also indicated on the final test data sheet. If this value changes during routine maintenance and alignment, the new frequency should be noted in both places.
BFR LVL TP1	Buffer Level Test Point. A dc test point used to indicate that the oscillator and buffer are functioning.
1ST DBLR ADJ	First Doubler Adjustment. Adjust for maximum dc level at TP2 (1st DBLR Level).
1ST DBLR LVL TPT2	First Doubler Level Test Point. A dc test point used to verify that the first doubler is functioning.
LO2 OUT ADJ	LO2 Output Adjustment. Adjust for maximum LO2 RF output.
	Note: If a power meter is not available, the LO2 Output may be tuned for a maximum dc level at TP3 (LO2 Output Level).
LO2 OUT LVL TP3	LO2 Output Level Test Point. A dc test point used to indicate that the second doubler is functioning.
LO3 OUT LVL TP4	LO3 Output Level Test Point. A dc test point used to verify that the third LO (13.7 MHz oscillator) is functioning.
	Note: The LO2 frequency affects the STL receiver distortion and stereo crosstalk performance. When installing a replacement module in an STL receiver, the frequency should be set to the value specified on the Double Converter module.

6.4.N FM Demodulator

LOG GAIN ADJ	Log Gain Adjustment. Calibrates the RF LEVEL meter function. To accomplish this, the RF GAIN ADJ on the Preamplifier and First Mixer module should be at 0 attenuation (-14 V to -16 V). With 10 mV of signal applied to the RF input, R3 on the Metering and Status board should be adjusted for a reading of 3K on the middle scale. The input should then be reduced to 100 Micro-V, and the LOG GAIN ADJ on the FM Demodulator should be adjusted for 100 on the middle scale. The 3, 10, 30, 100, 300, 1K, and 3K levels should be checked to ensure that the meter reads between the upper and lower line on the meter for each range. As a general rule, R3 on the Metering and Status board is used to adjust the full scale or 3K reading, and the LOG GAIN ADJ on the FM Demodulator module is used to adjust the linearity in the 100 to 300 Micro-V range.
LOG LVL TP3	Log Level Test Point. A dc test point used to monitor the first stage of the meter log amplifier.
DEMOD LVL TP2	Demodulator Level Test Point. A dc test point with a voltage proportional to the frequency of the 3 MHz IF. Normally this voltage is between +4 and +6 Vdc.
MUTE THR ADJ	Mute Threshold Adjust (LED). Indicates status of mute logic (red = mute).
MUTE THR ADJ	Mute Threshold Adjust. Adjusts the mute logic threshold; threshold = 20 Micro-V input signal with RF gain at 15 on receiver meter (TP1 on the Preamplifier and First Mixer module at -14 V to -16 V).
BB LVL ADJ	Baseband Level Adjust. Adjust the output of the baseband including the composite and multiplex levels. ±50 kHz deviation = 3.5 V p-p.
BB LVL TP1	Baseband Level Test Point. An ac test point used to monitor the output level of the baseband processor. ±50 kHz deviation = 3.5 V p-p.

6.4.0 Composite Baseband Processor

HF TILT ADJ	HF Tilt Adjustment. Adjusts the stereo separation between 1 and 5 kHz.
LF TILT ADJ	LF Tilt Adjustment. Adjusts the stereo separation between 30 and 100 Hz.
DLY EQ ADJ	Delay Equalizer Adjustment. Adjusts the stereo separation between 10 and 15 kHz.
MUX LVL ADJ	Multiplex Level Adjustment. Adjusts the multiplex level output of the Composite Baseband Processor module. Normally adjusted so that ±5 kHz deviation equals 1.5 V p-p at 110 kHz.
COMP LVL TP1	Composite Level Test Point. An ac coupled test point used to measure the composite level. Normally, 3.5 V p-p equals ±50 kHz deviation.
MUX LVL TP2	Multiplex Level Test Point. An ac coupled test point used to measure the multiplex level. 5 kHz deviation at 110 kHz equals 1.5 V p-p.

Notes: The HF TILT, LF TILT, and DELAY EQ adjustments are used primarily to optimize stereo separation performance. In other applications, such as communications, HF TILT and LF TILT would be used to adjust the audio frequency response within ±.1 dB from 30 Hz to 53 kHz. The DELAY EQ adjustment would have no effect on the frequency response performance.

6.4.P Metering and Status

R1 Adjusts the PGM LEVEL meter function on the receiver Metering and Status board. Zero dB on the top scale of the meter equals ±50 kHz deviation of the composite signal.

R2 Adjusts the MUX LEVEL function of the meter. A reading of 5 on the lower scale equals 5 kHz deviation of the main carrier by the 110 kHz subcarrier. The meter indication for the 185 kHz deviation is given on the test data sheet (Section 8).

R3 Used to adjust the RF LEVEL function. A reading of 3K on the center scale of the meter equals 3000 Micro-V of input signal. Other controls that affect this setting are: the RF GAIN Adjust on the Preamplifier and First Mixer module, and the LOG GAIN Adjust on the FM Demodulator module. (See Paragraph 6.4.N LOG GAIN ADJ for the alignment of this meter function.)

R4 Adjust to center of the lowest scale for the LO1 LEVEL meter function.

R5 Adjust to center of the lowest scale for the LO2 LEVEL meter function.

R6 Adjust to center of the lowest scale for the LO3 LEVEL meter function.

R7 Adjusts the RF GAIN meter function. Adjust to 15 on the lower scale when TP1 on the Preamplifier and First Mixer module is between -14 V and -16 V.

R8 Adjusts the VOLTMETER function of the meter. Adjust by connecting a test probe between TP1 on the Metering and Status board and TP5 on the Power Supply module.

R9 Adjusts the meter ballistics. The meter is normally adjusted for a 0.25 dB overshoot by switching between the VOLTMETER meter function (with no input) and the PGM LEVEL meter function with a 0 dB input (program input = 3.5 V p-p or 1.25 V rms).

6.4.Q Mute and Transfer

The Mute and Transfer module requires no adjustment.

If a failure is suspected in the Mute and Transfer module, the following information may be useful in isolating the problem:

1. A mute signal from the FM Demodulator (Mute Threshold Adjust LED red) will deenergize the mute relay and disconnect the composite and multiplex audio outputs.

2. This module may be externally muted, either by a remote mute input or a transfer input from a dual STL receiver.

3. The transfer mode is activated by the STL receiver OPERATE/TRANSFER switch. Disconnecting J3 will open this circuit and eliminate the possibility of either a short circuit or bad switch.

6.4.R Power Supply

Input Voltage: Check the voltage indicated on the voltage selector card (see Paragraph 4.2).

Output Voltages: The output voltages are predetermined by an internal reference in the IC regulator chips. Overvoltage generally indicates a failure of the appropriate chip. Zero output voltage generally indicates a short circuit in one of the STL receiver modules. This can be verified by removing J1 through J4 and checking the output voltage.

Poor regulation generally results from either a high load (greater than 0.75 A) or poor mechanical connection with the heat sink.

6.5 GENERAL TROUBLESHOOTING INFORMATION

Description:

The information below will assist in troubleshooting an STL transmitter or receiver to the module level.

Test Equipment:

Attenuator 50-Ohm Load	Philco	662A-30
Counter	Tektronix	DC-508A
Directional Coupler	Microlab/FXR	Model CB-49B
Distortion Measurement Set	Hewlett-Packard	Model 339A
Power Meter and Sensor	Hewlett-Packard	Model 435A with Model 8481A Power Sensor
RF Signal Generator	Hewlett-Packard	Model 8640B
RF Spectrum Analyzer	Hewlett-Packard	Model 8559A
Stereo Demodulator	QEI	Model 691
Multimeter	Data Precision	Model 935
75 s De-emphasis Network	Figure 6-16	

6.5.1 Transmitter Troubleshooting Procedure

1. Connect the equipment as shown in Figure 6-1, and position the RADIATE/STANDY switch to the RADIATE position.

2. Verify that the +15 V, -15 V, and +5 V status lights are green. If they are not, power supply voltages should be checked before proceeding.

3. Verify that the RADIATE, AFC LOCK, and +12 V status indicators are green. The AFC LOCK indicator is controlled by the FMO. The RADIATE status indicator is controlled by the Transmitter Control board, and the +12 V indicator is controlled by the Power Supply. Also, the wiring harness and the Metering and Status board may lead to faulty indications.

4. Using the final test data sheet (Section 8) as a reference, use the METER FUNCTION switch to select the following positions:

   AFC LEVEL - The meter should indicate within the lower black arc. If it does not, the FMO AFC Level should be aligned before proceeding.

   IPA LEVEL - The IPA Level should read within the lower black arc. If it does not, the following steps should be taken:

      Verify that the +12 V is between 12.25 and +12.75 V.

      Using the power meter, verify that the input to the IPA amplifier on the Up Converter is at least -10 dBm. If it is, the problem is located in the Up Converter amplifier.

      Verify that the output of the Up Converter mixer is at least -6 dBm. If it is, the problem is located in the 950 MHz Up Converter bandpass filter.

      Measure the output of the First Local oscillator and Multiplier module for a value of between +5 and + 10 dBm.

      Using the power meter, measure the output of the FMO for a value between 0 and +5 dBm.

6.5.2 Receiver Troubleshooting Procedure

1. Connect the equipment as shown in Figure 6-2, and adjust the RF signal generator as indicated in procedure 6.3.2, Step 1.

2. Verify that the power supply status LEDs on the front panel are green. If they are not, use the multimeter to verify the power supply output voltages prior to proceeding.

3. Using the METER FUNCTION switch, verify that the LO1 LEVEL, LO2 LEVEL, and LO3 LEVEL meter readings are within the lower arc on the meter.

4. Using the METER FUNCTION switch, select the RF GAIN position and verify that the meter reads 15. If it does not, adjust the RF GAIN ADJ on the Preamplifier and First Mixer module so that TP1 on the Preamplifier and First Mixer module reads between -14 and -16 V.

5. The following procedure is used to measure the gain distribution of the receiver for proper performance:

   a. Using the procedure outlined in Paragraph 6.4.I, measure the preselector insertion loss for a minimum of 2 dB.

   b. Reconnect the preselector output to the preamplifier input.

   c. Using the RF signal generator and spectrum analyzer, measure the Preamplifier and First Mixer conversion gain for a value between +10 and +14 dBm. Note: Use the output of the RF signal generator to establish a reference on the spectrum analyzer; then measure the 70 MHz output of the Preamplifier and First Mixer module. Add preselector insertion loss to the gain indicated by the spectrum analyzer to determine the Preamplifier and First Mixer conversion gain.

   d. Using the output of the Preamplifer and First Mixer module as a reference, measure the conversion gain of the Double Converter module. The 3 MHz output should be between +3 and +7 dB greater than the 70 MHz input.

e. Connect the output of the RF signal generator to the input of the FM Demodulator. The output of the RF signal generator should be set for a frequency of 3 MHz at a level of -25 dBm with an FM deviation of 5 kHz. The output of the FM Demodulator should be 0.35 V p-p. If it is not, troubleshooting of the FM Demodulator is indicated. If it is, troubleshooting of the Composite Baseband Processor or the Mute and Transfer modules is indicated.

6.6 TEST FIXTURE DIAGRAMS

The test fixtures shown in Figures 6-15 through 6-18 have been designed to interface with the equipment specified in Table 6-1.

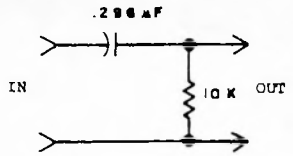

Figure 6-15. 50 Hz high-pass filter.

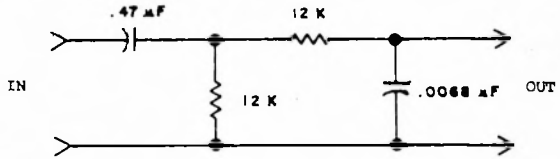

Figure 6-16. 75 Micro-s de-emphasis network with 30 Hz high-pass filter.

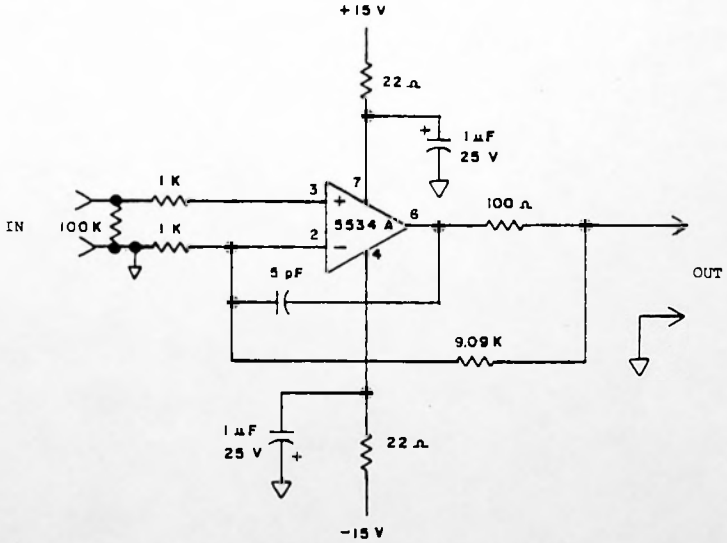

Figure 6-17. Audio amplifier.

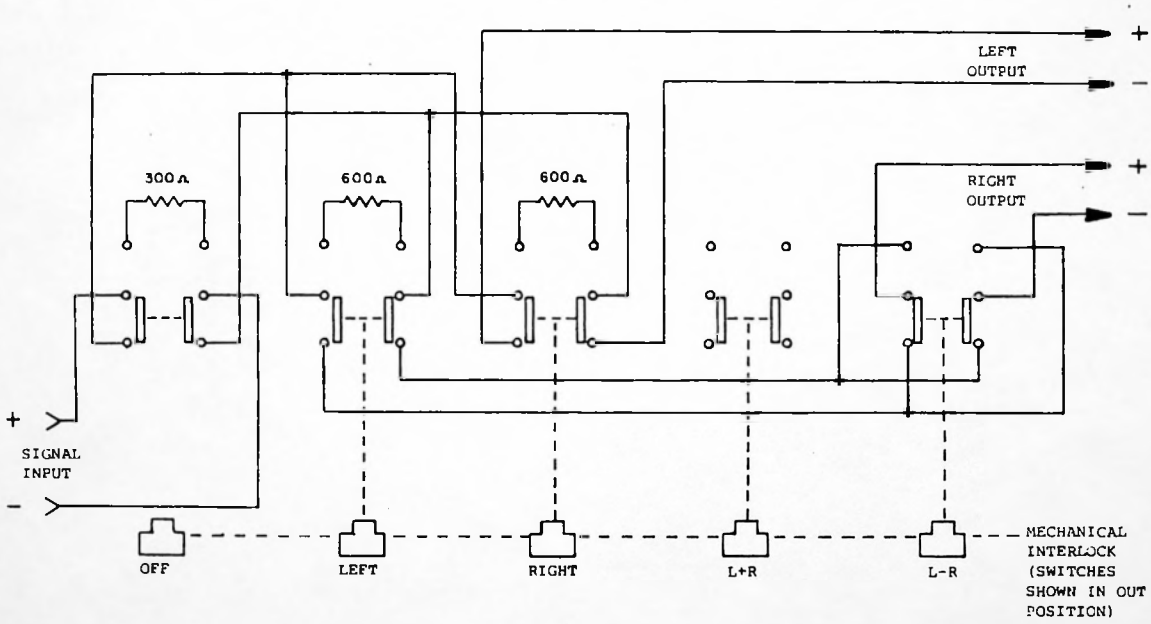

Figure 6-18

Stereo Source Selector

SECTION 7

RECOMMENDED SPARES

7.1 INTRODUCTION

This section contains replacement parts information. The next two subsections contain information on complete replacement modules, which is the most expedient method of correcting a problem. The last subsection decribes the spare parts kit and optional spare parts kits for those who wish to troubleshoot to the component level. Price information on the recommended spares is available upon request.

7.2 SPARE TRANSMITTER MODULES

Module	Drawing Number	Module Item No.	Stock Location
Composite Audio Processor	20D2831	9301318	2211
FMO Synthesizer	20C2847	9103011	2212
Up Converter	20C2848	9103003	2212
First Local Oscillator	20D2828	9301276	2211
RF Amplifier	20D2836	9301334	2211
Metering and Status	20D2818-2	9204199	2211
Transmitter Control	20C2834	9204215	2211
Power Supply	20C2817	9203597	2211

7.3 SPARE RECEIVER MODULES

Module	Drawing Number	Module Item No.	Stock Location
Preselector Filter	21C2754	9102138	2211
Preamp and First Mixer	20D2827	9301268	2211
First Local Oscillator	20D2828	9301276	2211
Double Converter*	20D2824	9301235	2211
Second and Third Local Oscillator	20D2829	9301243	2212
FM Demodulator	20D2811	9301284	2211
Composite Baseband Processor*	20D2812	9301292	2211
Metering and Status	20D2818-1	9204165	2211
Mute and Transfer	21D2742	9102120	2211
Power Supply	21D2741	9102112	2075

*These modules are matched sets and should be replaced together.

7.4 SPARE PARTS KITS

The following pages describe the spare parts kit and optional spare parts kits. These kits contain component level replacements.

ITEM NUMBER: 9051467 **** SPARE PTS PCL-606/C 940-960
MOSELEY ASSOCIATES, INC.
111 CASTILIAN DRIVE
GOLETA, CA. 93117
(805) 968-9621

KIT NUMBER: SP-60 A DATE 1/20/84

COMPONENT ITEM NO.	MANUFACTURER PART NUMBER	QTY PER	UNIT PRICE	EXTENDED PRICE
3390549	550-0406 LED RED 2.0020 WIDE RT/HOLDER	1	1.12	1.12
3390580	550-3006 LED DUAL (90)	1	3.29	3.29
3390598	521-9177 LED DUAL	1	2.95	2.95
3390606	PCR 740 CTP LED HOUSE P-C-LITE	3	.74	2.21
3390614	HLMP-3507 LED GRN 9.0020 NARROW DIFFUSED	3	1.19	3.57
3600145	1N4154 DIO 1N4154 25V 4NS SI DO35	5	.29	1.44
3600178	1N4733A Z5.1A DIO Z1N4733A 5.1V 1W 5% AIAY	1	1.33	1.33
3610003	1002 DIO 1002 200V 1A SI DO39	1	.35	.35
3610045	5082-2835 DIO 5032-2835 FAST	1	1.30	1.30
3610078	MDA-201 DIO MDA-201 100V BRIDGE 2A	1	3.18	3.18
3610086	MDA-801 DIO MDA-801 100V BRIDGE 8A	1	13.52	13.52
3610235	HPND-4166 DIO HPND-4166	1	36.05	36.05
3610243	HP 5082-0180 DIO 5082-0180	1	13.65	13.65
3610250	MV209 DIO 30V 6/30 PF TO92 MV209	1	1.25	1.25
3610268	5082-2811 DIO 5082-2811	1	4.17	4.17
3630001	2N918 XT NS2N918 .4W600M030V50M2P	1	2.09	2.09
3630076	2N3563 XT NS2N3563 .2W600M030V50M2P	1	.35	.35
3630175	2N3866 XT NP2N3866 05W500M055V.4A	1	3.43	3.43
3630225	2N4402 XT PS2N4402 .35W150M04GV.6A9P	1	.32	.32
3630456	2N3904 XT 2N3904	2	.25	.49
3630464	2N3906 XT 2N3906	1	.25	.25
3640109	D1-128 XT NPD1-128 5.8W866M036V.25A	1	30.63	30.63
3640133	DM5-128 XT NPDM5-128 29W 036V02A	1	52.59	52.59
3640141	DM10-128 XT NPDM10-128 50W 036V04A	1	86.65	86.65

ITEM NUMBER: 9051467 **** SPARE PTS PCL-606/C 940-960
MOSELEY ASSOCIATES, INC.
111 CASTILIAN DRIVE
GOLETA, CA. 93117
(805) 968-9621

KIT NUMBER: SP-60 A DATE 1/20/84

COMPONENT ITEM NO.	MANUFACTURER PART NUMBER	QTY PER	UNIT PRICE	EXTENDED PRICE
3640273	MRF 901 XT MRF901	1	4.90	4.90
3640281	HXTR-3101 XT HXTR-3101	1	16.63	16.63
3640299	HXTR-3102 XT HXTR-3102	1	18.43	18.43
3640307	U310 XT U310	1	3.20	3.20
3640315	J310 XT FET J310	1	1.66	1.66
3650074	LM340T-12 /7812 RGLTR PLM340T12/7812	1	1.33	1.33
3650132	MC79L05 ACP RGLTR NMC79L05 05V 0.1A TO92	1	1.06	1.06
3650207	7815UC RGLTR PUA7815UC+15V 1.5A TO220	1	2.06	2.06
3650223	7915UC RGLTR NUA7915UC-15V 1.5A TO220	1	2.59	2.59
3650322	PVA7305UC RGLTR PVA7805UC	1	2.02	2.02
3650348	MA42141-511 XT MA42141	1	26.81	26.81
3650363	LM338-K-STEEL RGLTR LM338	1	16.23	16.23
3660115	SN7413N IC SN7413N DU 4I NAND ST	1	1.05	1.05
3660206	SN7442N IC SN7442N BCD-DECIMAL	1	1.09	1.09
3660388	SN74121N IC SN74121N MONOMULTI ST	1	1.09	1.09
3660420	SN74132N IC SN74132N QU 2IN NAND ST	1	1.44	1.44
3660602	SN74193N IC SN74193N BINUPDWNCO2CLCK	1	2.03	2.03
3660685	SN74LS04N IC SN74LS04N HX INV	1	.77	.77
3660917	SN75451BP IC SN75451P DU AND HIGHV OC	1	.95	.95
3660966	SN74LS260N IC SN74LS260N DU 5IN NOR	1	1.27	1.27
3661105	74LS168N IC DEC 4BIT UP/DWN SYNC COUNT	1	1.99	1.99
3661121	74S196 IC DEC/BI-QUIN COUNT/LATCH	1	5.85	5.85
3661139	DM7411N IC SN7411	1	.84	.84
3680139	MC14051P IC MC14051P 8CH MUX R280 7V	1	1.52	1.52

ITEM NUMBER: 9051467 **** SPARE PTS PCL-606/C 940-960
MOSELEY ASSOCIATES, INC.
111 CASTILIAN DRIVE
GOLETA, CA. 93117
(805) 968-9621

KIT NUMBER: SP-60 A DATE 1/20/84

COMPONENT ITEM NO.	MANUFACTURER PART NUMBER	QTY PER	UNIT PRICE	EXTENDED PRICE
3680253	CD4046BE IC PHASE-LOCKED LOOP	1	3.61	3.61
3680261	CD4020BE IC 8IN COUNT/DIVIDER	1	3.38	3.38
3730041	CA-3018 IC CA3018 XSTR ARRAY	1	2.49	2.49
3730173	LM-318N IC LM318N OPAMP HISPEED	1	2.84	2.84
3730215	LM-1458N IC LM1458N OPAMP DUAL	1	1.11	1.11
3730348	MC1355P IC MC1355P AMP FM/IF	1	4.18	4.18
3730728	NE-5534AN IC NE5534AN OPAMP LO NOISE	1	5.43	5.43
3730769	SL560C IC SL560C	1	15.07	15.07
3730934	HI-200-5 IC HI-200-5	1	8.33	8.33
3730967	NE5532AN IC DUAL OP AMP	1	6.18	6.18
3730975	SBL-1 IC SBL-1	1	13.48	13.48
3730983	LM358N IC LM358N	1	1.23	1.23

** TOTAL EXTENDED PRICE: 450.32 **

ITEM NUMBER: 9051475 **** OPT S/P KIT PCL-606/C 940-960 PAGE 1

MOSELEY ASSOCIATES, INC.
111 CASTILIAN DRIVE KIT NUMBER: SP-60 B DATE 1/20/84
GOLETA, CA. 93117
(805) 968-9621

COMPONENT ITEM NO.	MANUFACTURER PART NUMBER	QTY PER	UNIT PRICE	EXTENDED PRICE
3270337	T10-E2-Z4-6VDC RELAY 4PDT 6VDC	1	23.38	23.38
3350253	PCLI-16-8-65 OVEN XTAL PCL I-16-8-65	1	40.00	40.00
3370095	AGC 1 FUSE AGC-1 AMP (FAST-BLO)	1	.67	.67
3370111	AGC 2 FUSE AGC-2 AMP (FAST-BLO)	1	.74	.74
4090437	3-1108 B XFMR 38-P-98 3-1108	1	49.35	49.35
4090445	3-1107 XFMR 8-P-100	1	59.71	59.71
4270047	360X402G030AA2A CAP PWR LYTIC 4000/30V	1	6.29	6.29
4350682	LM7200-25 CAP 7200/25V	1	20.30	20.30

** TOTAL EXTENDED PRICE: 200.44 **

ITEM NUMBER: 9051481 **** OPT CRYS PCL-606/C 940-960
MOSELEY ASSOCIATES, INC.
111 CASTILIAN DRIVE
GOLETA, CA. 93117
(805) 968-9621

KIT NUMBER: SP-60 C DATE 1/24/84

COMPONENT ITEM NO.	MANUFACTURER PART NUMBER	QTY PER	UNIT PRICE	EXTENDED PRICE
3340759	30A0080 A0 XTAL 20.175MHZ PCL-606 2ND LO	1	40.00	40.00
3340767	30A0081 A0 XTAL 13.7MHZ PCL-606 3RD LO	1	40.00	40.00
3340775	30A0078 A0 XTAL 4.096 HC-25 FMO PCL-606	1	40.00	40.00
3340791	30A0079-1 XTAL 51.000 MHZ PCL-606 TX	1	40.00	40.00
3340909	30A0082 B0 XTAL PCL-606 RX	1	40.00	40.00

** TOTAL EXTENDED PRICE: 200.00 **

SECTION 8

FACTORY TEST RESULTS

MODEL PCL-606/C

Date SEPT 11TH 1985

Order # 10294

Technician BEAR

Customer KISW-FM

XMTR Serial # 47142

RCVR Serial # 47177

Frequency 948.500 MHZ

Transmitter Meter Readings

FWD Power 7.5 watts	0	dB (top)
REFL Power	2	dB (top)
PGM Level	0	dB (top)
MUX Chan 1 @ 110 kHz	5	(linear)
Chan 2 @ 185 kHz	7.5	(linear)
AFC Level	within	(lower arc)
IPA Level	within	(lower arc)
PA Current	1	(linear)
Voltmeter	0 to 25 V	(linear)

Receiver Meter Readings

PGM Level	0	dB (top)
MUX 110 kHz	5	(linear)
185 kHz	6.5	(linear)
RF Level	3 µV to 3 mV	(log)
LO-1 Level	within	(lower arc)
LO-2 Level	within	(lower arc)
LO-3 Level	within	(lower arc)
RF Gain	15	(linear)
Voltmeter	0 to 25 V	(linear)

Transmitter IPA Output Level

+22 dBm

Receiver 2nd LO Frequency

80670 MHz

Receiver Noise Performance

RF Level for 60 dB Stereo SNR	110 µV
RF Level for 60 dB de-emphasized SNR	21 µV
RF Level for 72 dB Stereo SNR	410 µV
Squelch set to 45 dB Stereo SNR	

System Distortion

1 kHz	.045 %
15 kHz	.13 %

System Stereo Performance

Separation 30 Hz	-65 dB
Separation 1 kHz-15 kHz	-57 dB
Crosstalk M→S	-62 dB
Crosstalk S→M	-65 dB

System Noise Performance

(with 3 mV RF input)

Ultimate Stereo SNR (De-emp)	-74 dB
Ultimate De-emphasized SNR	-80 dB
Ultimate Wideband SNR	-75 dB

These readings were noted during final electrical test of the equipment and are intended for reference purposes. Readings may vary with component replacement or aging, adjustment, RF terminations, equipment installation, or path conditions.

APPENDIX

STL PATH EVALUATION

INTRODUCTION

This appendix provides instructions for preparing the STL path profile and the path evaluation calculations. The STL path profile is needed to determine a clear unobstructed line-of-sight path with the main incident beam clearing all objects by a distance that is at least 0.6 of the radius of the first Fresnel zone.

The path should be plotted on a seven and a half minute topographical map, which is available from the United States Geological Survey. The maps can be ordered as follows:

East of the Mississippi:	West of the Mississippi:
Geological Survey Distribution Section Washington, DC 20242	Geological Survey Distribution Section Federal Center Denver, CO 80225

STL PATH PROFILE

Using ground elevations obtained from the topographical map, prepare an STL path profile using the true-earth-radius graph paper attached to this appendix. Be sure to include all obstacles in the path, including buildings, towers, grain elevators, recently erected structures, etc. that may not appear on the map.

The axis of the main incident beam should, ideally, clear all obstacles in the path by a distance that is at least 0.6 of the radius of the first Fresnel zone. This factor is used to define the transition between the obstruction and interface zones regardless of the reflection coefficient.

The following formula may be used to determine the first Fresnel zone clearance:

$$F_r = 2280 \frac{AB}{f_o P}$$

where

F_r = Fresnel radius (in feet) perpendicular to the main beam path

A = distance (miles) from receiver to obstruction

P = total path length (miles)

B = P - A (miles)

f_o = carrier frequency in MHz.

Draw a straight line on the STL path profile graph which clears any obstacle in the path by the distance calculated using the above formula multiplied by 0.6 which yields the critical dimension. This line then determines the STL antenna and/or tower heights necessary at each end of the path.

PATH EVALUATION FOR AURAL STL SYSTEMS

Using the System and Path Information Sheet and the Path Evaluation Form, prepare path evaluation calculations for each path under consideration. Follow these instructions for completing the Path Evaluation Form:

Line 1. Transmitter Power Output: Enter the transmitter output power in dBm. Examples: 5 W = +37 dBm, 7 W = +38.5 dBm, 8 W = +39 dBm, 10 W = +40 dBm, and 50 W = +47 dBm.

Line 2. Transmitter Antenna Gain: Enter the gain of the STL transmitting antenna over an isotropic antenna.

Line 3. Receiver Antenna Gain: Enter the gain of the STL receiving antenna over an isotropic antenna.

Line 4. Total Gain: Add the total of lines 1, 2, and 3 and enter here.

Line 5. Path Loss: Use a straight-edge ruler on the free-space attenuation nomograph provided on the System and Path Information Sheet. With the right side aligned on fo and the left side at the path distance, read the unobstructed free-space attenuation in dB from the center scale. Enter this value on Line 5.

Line 6. Transmission Line Loss: Determine the total length of transmission line required in the STL system (at both ends, the transmitter and receiver); then enter the line length and line loss in dB.

Line 7. Connector Loss: Enter total connector losses. (Example a nominal figure is 0.5 dB based on 0.125 dB per mated connector pair at 950 MHz).

Line 8. Other Losses: Enter other miscellaneous system losses here. These may include power dividers, duplexers, diplexers, circulators, isocoupler, and the like.

Line 9. Total Loss: Enter the total of lines 5, 6, 7, and 8. This is the total STL system loss.

Line 10. Total Gain: Enter the total gain from line 4.

Line 11. Total Loss: Enter the total loss from line 9.

Line 12. Effective Received Signal: Enter the difference between line 10 and line 11. This is the signal level in dBm (without fading) that we expect at the RF input connector of the STL receiver.

Line 13. Minimum Signal for 60 dB SNR: Enter the model number of the STL receiver. Using the listing on the System and Path Information Sheet, enter the receiver signal input (in dBm) required to achieve a 60 dB SNR output.

Line 14. Fade Margin: Subtract line 13 from line 12 and enter here. At 950 MHz, typical minimum fade allowances are:

Monaural	-	15 dB
Composite	-	20 dB

MOSELEY ASSOCIATES, INC.
a flow general company • santa barbara research park
111 CASTILIAN DRIVE • GOLETA, CALIFORNIA 93017

SYSTEM CALCULATIONS

_____ Reference Number _____ Prepared By _____ Date

CUSTOMER _____

_____

_____

SYSTEM GAINS

1. Transmitter Power Output (Model # _____) (_____ W) + _____ dBm
2. Transmitter Antenna Gain (Antenna Type _____) + _____ dBi
3. Receiver Antenna Gain (Antenna Type _____) + _____ dBi
4. Total Gain + _____ dBm

SYSTEM LOSSES

5. Path Loss (_____ miles/_____ km) - _____ dB
6. Transmission Line Loss (Total ft. _____/_____ m)
   Type _____) - _____ dB
7. Connector Loss (Total) - _____ dB
8. Other Losses _____ - _____ dB
9. Total Loss - _____ dB

SYSTEM CALCULATIONS

10. Total Loss (Line 9) - _____ dB
11. Total Gain (Line 4) + _____ dBm
12. Effective Received Signal _____ dBm
13. Minimum Signal Required for _____ dB SNR
    (Model _____) - _____ dBm
14. Fade Margin _____ dB

NOTES:

MOSELEY ASSOCIATES, INC.

950 MHz MICROWAVE PATH EVALUATION INSTRUCTIONS

The enclosed System Calculation sheet, nomograms, table and Fresnel zone clearance formula can be used to prepare a preliminary evaluation of a 950 MHz microwave link. The following instructions will aid you in completing the Microwave System Calculation sheet.

A. Line One. Enter the power output of the transmitter in dBm. Examples: 5w = +37.0 dBm, 6.5w = +38.0 dBm, 7w = +38.5 dBm, 8w = +39.0 dBm. (dBm = 30 + 10 Log $P_{o\ [in\ watts]}$)

B. Lines Two and Three. Enter on these lines the Transmitter and Receiver antenna gains over an isotropic source. Refer to the nomogram in Figure 4 which gives the power gain of a parabolic reflector at 950 MHz. Note: If the manufacturer quotes a gain in dBd (referred to a dipole), dBi is approx. dBd +1.1 dB.

C. Line Four. Total lines 1, 2. and 3 and enter here. This is the total gain in the proposed system.

D. Line Five. The proposed path should be plotted on a seven and one-half minute topographical map which can be obtained from the United States Geological Survey. Mail orders for maps west of the Mississippi River should be addressed to The Geological Survey, Distribution Section, Federal Center, Denver, Colorado, 80225, and for maps east of the Mississippi River to The Geological Survey, Distribution Section, Washington, D.C., 20242. Maps of Alaska may also be ordered from The Geological Survey, 520 Illinois Street, Fairbanks, Alaska, 99701. State indexes and a folder describing topographic maps are furnished free on request.

Using ground elevation information obtained from the topographical map, a path profile should be prepared using either true earth or 4/3 earth's radius graph paper. To obtain the necessary path clearance for a clear path, all obstacles in the path of the rays must be cleared by a distance of 0.6 of the first Fresnel zone. Be sure to include recently erected structures, such as buildings, towers, water tanks, etc., that may not appear on the map. The following formula may be used to determine 0.6 first Fresnel zone clearance.

MOSELEY ASSOCIATES, INC.

M. Line Fourteen. Subtract line 13 from line 12 and enter here. This is the amount of fade margin in the system. Typical fade margins that should be allowed are 20-25 dB for very short paths (up to 5 miles), 15 dB for median paths (5-15 miles) and increasing fade margins for longer distances (greater than 15 miles) up to a maximum of 35 dB.

TABLE 1.

Typical Transmission Line Loss at 950 MHz

Type	Loss (dB/100')	(dB/100m)
1/2" Foam Dielectric (low loss)*	2.6	8.3
7/8" Foam Dielectric (low loss)+	1.5	4.6
1-5/8" Foam Dielectric (low loss)°	0.9	3.0

*Such as Andrew LDF4-50A
+Such as Andrew LDF5-50A
°Such as Andrew LDF7-50A

TABLE 2.

Typical Received Signal Strength required for 60 dB SNR

Model	dBm	≡ μv	
PCL-606	-84.0	14.1	
PCL-606/C	-66.0	112.1	(for demodulated L or R)
PCL-505	-83.0	15.8	
PCL-505/C	-67.0	99.9	(for demodulated L or R)
PCL-101	-79.0	25.1	

MOSELEY ASSOCIATES, INC.

$$H = 1316\sqrt{\frac{A \times B}{P \times F}}$$

H = Height in feet*
A = Distance from terminal to obstruction in miles
P = Path length in miles
B = P - A in miles
F = Frequency in MHz

Draw a straight line on the path profile clearing any obstacle in the path by the distance determined above. This line will then indicate the required antenna and/or tower height necessary at each end. If it is impossible to provide the necessary clearance for a clear path, a minimum clearance of 30 feet should be provided. Any path with less than 0.6 first Fresnel zone clearance, but more than 30 feet can generally be considered a grazing path.

On line five enter the amount of path loss as determined by Figure 1, "Nomogram for Clear Path Attenuation," or Figure 2, "Nomogram for Grazing Path Attenuation."

E. Line Six. Enter the total transmission line loss. Typical losses are shown in Table 1.

F. Line Seven. Enter the total connector losses. A nominal figure of -0.5 dB is reasonable. (Based on 0.125 dB/mated pair.)

G. Line Eight. Enter all other miscellaneous losses here. Such losses might include power dividers, duplexers, diplexers, isolators, iso-couplers, and the like.

H. Line Nine. Total lines 5, 6, 7, and 8 and enter here. This is the total loss in the proposed system.

I. Line Ten. Enter the total loss from line 9.

J. Line Eleven. Enter the total gain from line 4.

K. Line Twelve. Subtract line 11 from line 10. This is the unfaded signal level to be expected at the receiver.

L. Line Thirteen. Using the information found in Table 2, enter here the minimum signal required for 60 dB signal-to-noise ratio.

*This dimension is actually a radius and can be used to consider the clearance needed when the proposed path passes near a building, tower, storage tank, etc.

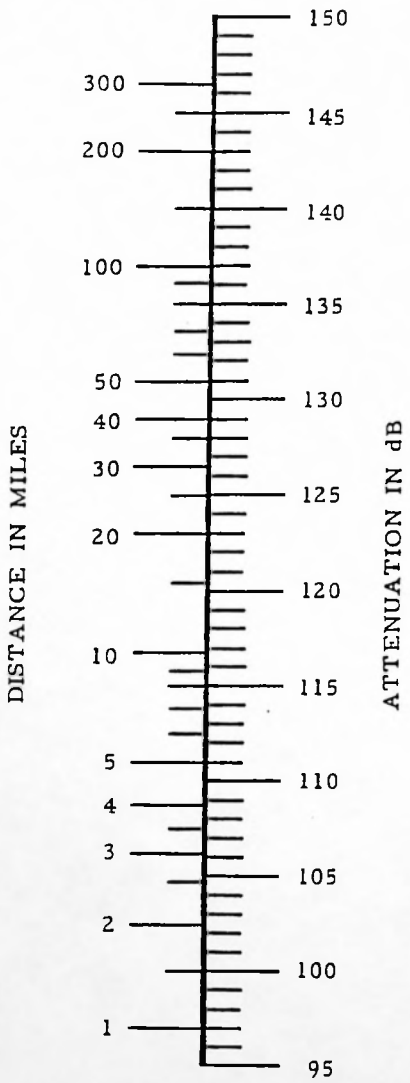

After K. Bullington

Figure 1. Nomogram for Free Space Attenuation Clear Path

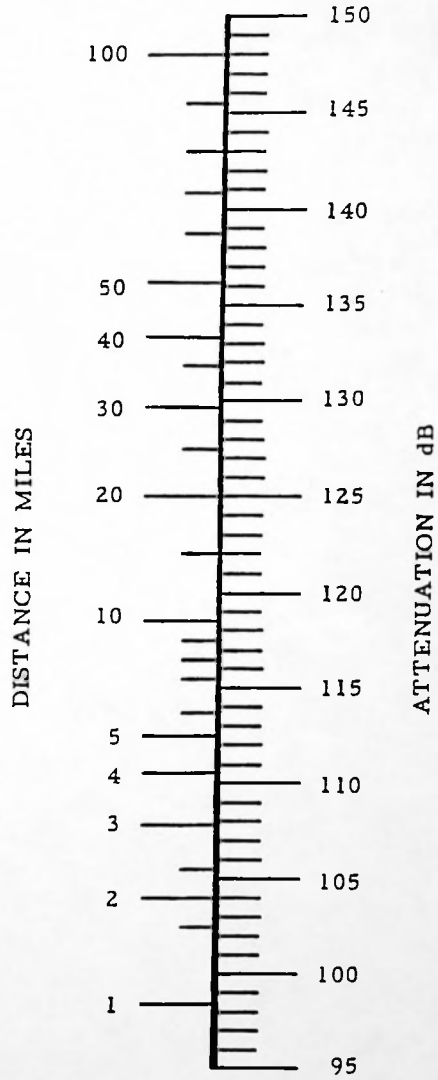

After K. Bullington

Figure 2. Nomogram for Space Attenuation Grazing Path

(Use this chart with great care -- consult Moseley Associates, Inc. in the case of <u>any</u> grazing path.)

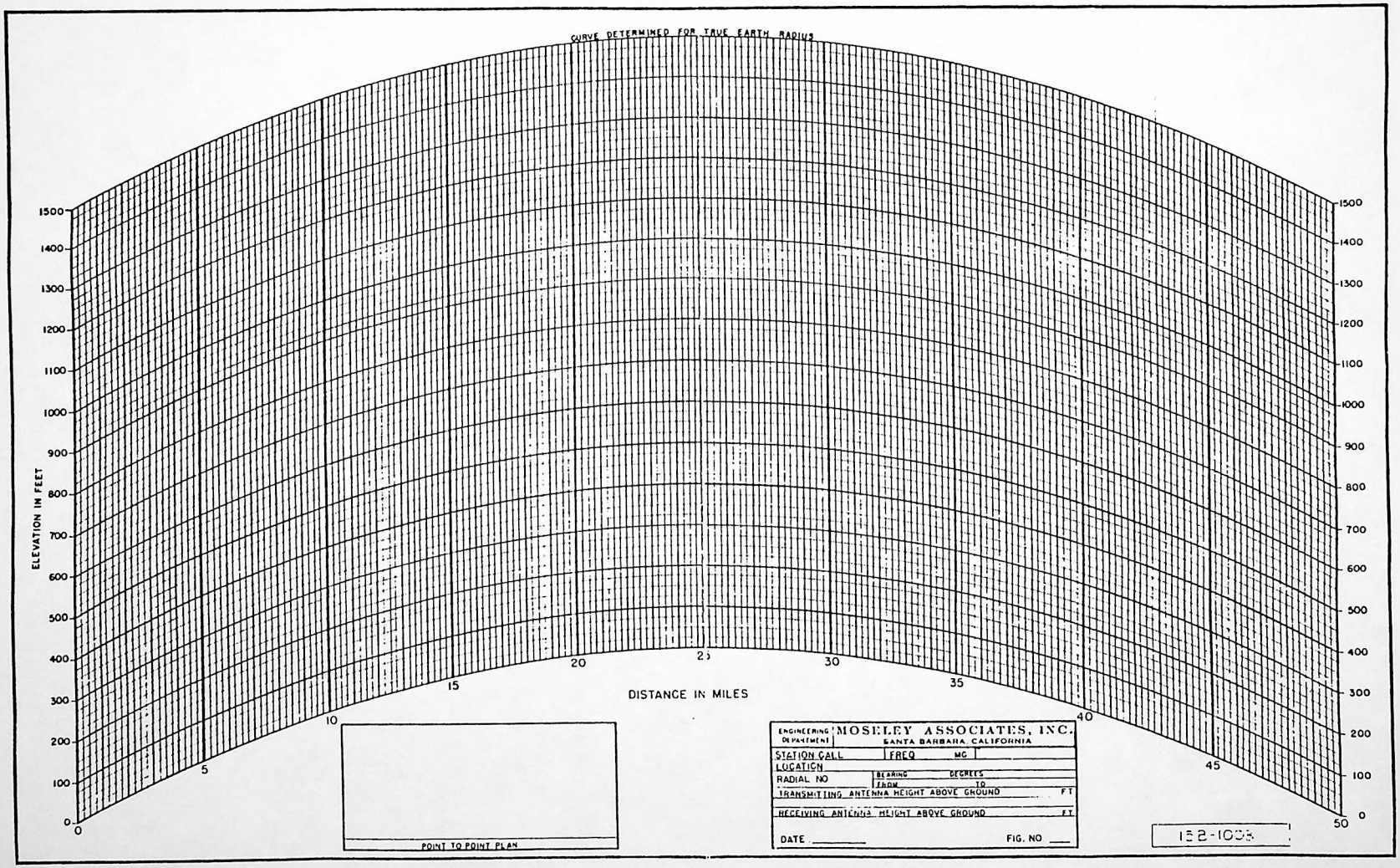
CURVE DETERMINED FOR TRUE EARTH RADIUS
ELEVATION IN FEET
DISTANCE IN MILES
0
100
200
300
400
500
600
700
800
900
1000
1100
1200
1300
1400
1500
0
5
10
15
20
25
30
35
40
45
50
POINT TO POINT PLAN
ENGINEERING DEPARTMENT
MOSELEY ASSOCIATES, INC.
SANTA BARBARA, CALIFORNIA
STATION CALL
FREQ
MC
LOCATION
RADIAL NO
BEARING
DEGREES
FROM
TO
TRANSMITTING ANTENNA HEIGHT ABOVE GROUND
FT
RECEIVING ANTENNA HEIGHT ABOVE GROUND
FT
DATE
FIG. NO
132-1008