Moseley

WARRANTY

All equipment designed and manufactured by Moseley Associates, Inc. is warranted against defects in workmanship and material that develop under normal use within a period of (2) years from the date of original shipment, and is also warranted to meet any specifications represented in writing by Moseley Associates, Inc., so long as the purchaser is not in default under his contract of purchase and subject to the following additional conditions and limitations:

1. The sole responsibility of Moseley Associates, Inc. for any equipment not conforming to this Warranty shall be, at its option:

A. to repair or replace such equipment or otherwise cause it to meet the represented specifications either at the purchaser's installation or upon the return thereof f.o.b. Santa Barbara, California, as directed by Moseley Associates, Inc.; or

B. to accept the return thereof f.o.b. Santa Barbara, California, credit the purchaser's account for the unpaid portion, if any, of the purchase price, and refund to the purchaser, without interest, any portion of the purchase price theretofore paid; or

C. to demonstrate that the equipment has no defect in workmanship or material and that it meets the represented specification, in which event all expenses reasonably incurred by Moseley Associates, Inc., in so demonstrating, including but not limited to costs of travel to and from the purchaser's installation, and subsistence, shall be paid by purchaser to Moseley Associates, Inc.

2. In case of any equipment thought to be defective, the purchaser shall promptly notify Moseley Associates, Inc., in writing, giving full particulars as to the defects. Upon receipt of such notice, Moseley Associates, Inc. will give instructions respecting the shipment of the equipment, or such other manner as it elects to service this Warranty as above provided.

3. This Warranty extends only to the original purchaser and is not assignable or transferable, does not extend to any shipment which has been subjected to abuse, misuse, physical damage, alteration, operation under improper conditions or improper installation, use or maintenance, and does not extend to equipment or parts not manufactured by Moseley Associates, Inc. and such equipment and parts are subject to only adjustments as are available from the manufacturer thereof.

4. No other warranties, express or implied, shall be applicable to any equipment sold by Moseley Associates, Inc. and no representative or other person is authorized by Moseley Associates, Inc. to assume for it any liability or obligation with respect to the condition or performance of any equipment sold by it, except as provided in this Warranty. This Warranty provides for the sole right and remedy of the purchaser and Moseley Associates, Inc. shall in no event have any liability for consequential damages or for loss, damage or expense directly or indirectly arising from the use of equipment purchased from Moseley Associates Inc.

Moseley Associates Incorporated
111 Castilian Drive
Santa Barbara, CA
93117-3093
a Flow General Company
Phone 805 968 9621
Telex 658448
Cable: MOSELEY

Instruction Manual

PCL-606/COMPOSITE
(940-960 MHz)
AURAL
STUDIO TRANSMITTER LINK

SPECTRUM EFFICIENT COMPOSITE

First Printing
April 1987

Moseley

Moseley
Associates
Incorporated

111 Castilian Drive
Santa Barbara, CA
93117-3093

a
Flow General
Company

Phone 805 968 9621
Telex 658448
Cable: MOSELEY

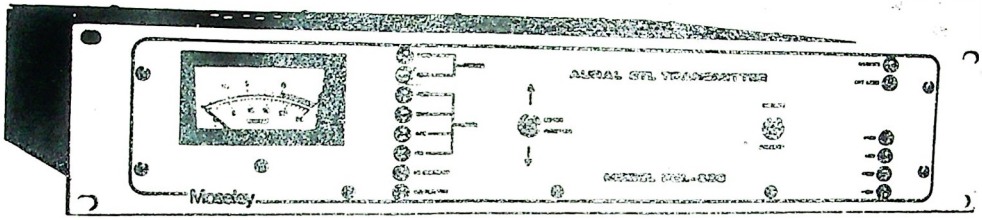

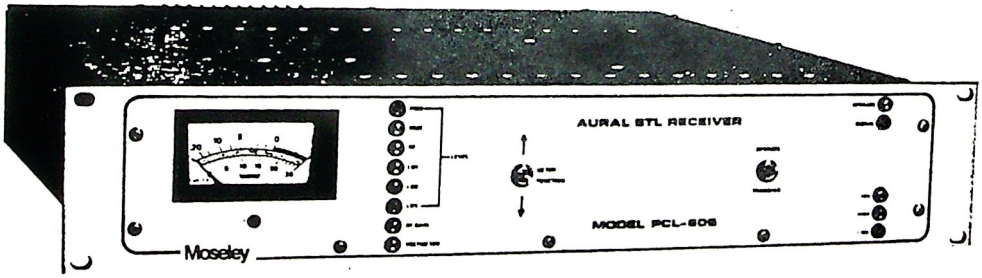

Model PCL-606/C Composite Aural

Studio-to-Transmitter Link

TABLE OF CONTENTS

Section		Page
List of Illustrations		v
Glossary		vii
1	SYSTEM CHARACTERISTICS	
1.1	Introduction	1-1
1.2	System Specifications	1-1
1.2.1	Transmitter Specifications	1-2
1.2.2	Receiver Specifications	1-3
1.3	System Features	1-4
1.4	Operational Controls	1-5
1.4.1	Purpose	1-5
1.4.2	Transmitter Front Panel	1-5
1.4.3	Receiver Front Panel	1-8
1.4.4	Transmitter Operational Adjustments	1-10
1.4.5	Receiver Operational Adjustments	1-11
2	SYSTEM DESCRIPTIVE INFORMATION	
2.1	Transmitter	2-1
	Composite Audio Processor	2-1
	FMO Synthesizer	2-1
	950 MHz Up Converter	2-2
	First Local Oscillator	2-2
	RF Amplifier	2-2
	Transmitter Control	2-3
	Metering and Status	2-3
	Power Supply	2-3
2.2	Receiver	2-4
	Preselector Filter	2-4
	Preamplifier and First Mixer	2-4
	First Local Oscillator	2-6
	Double Converter	2-6
	Second and Third Local Oscillator	2-6
	FM Demodulator	2-8
	Composite Baseband Processor	2-8
	Metering and Status	2-9
	Mute and Transfer	2-9
	Power Supply	2-10

3 MOSELEY ASSOCIATES GENERAL INFORMATION

3.0 Customer Service Information 3-1

4 INSTALLATION

4.1 Unpacking 4-1
4.2 Line Voltage Selection 4-2
4.3 Wide Band, Narrow Band Mode Selection 4-2
4.4 Preinstallation Checkout 4-3
Receiver Selectivity Selection 4-6
4.5 Rack Installation 4-6
4.6 Antenna Installation 4-6
4.7 Transmission Cables 4-7
4.8 Program and Multiplex Installation - Transmitter 4-8
4.9 Program and Multiplex Interconnect - Receiver 4-12
4.10 Main/Standby Interconnect 4-13
4.10.1 Transmitter Interconnect 4-13
4.10.2 Receiver Interconnect PCL-606/PCL-606 4-16
4.10.3 Receiver Interconnect PCL-606/Other 4-16
4.11 Remote Control of the STL Transmitter 4-16

5 MODULE CHARACTERISTICS

5.1 Introduction 5-1
5.2 Module Descriptions 5-1

Transmitter

Composite Audio Processor 5-2
FMO Synthesizer 5-3
Up Converter 5-5
First Local Oscillator and Multiplier 5-6
RF Amplifier 5-8
Metering and Status 5-9
Transmitter Control 5-11
Transmiter Power Supply 5-13

Receiver

Preselector Filter 5-15
Preamplifier and First Mixer 5-16
First Local Oscillator and Multiplier 5-17
Double Converter 5-19
Second and Third Local Oscillator 5-21
FM Demodulator 5-22
Composite Baseband Processor 5-24

Metering and Status 5-26
Mute and Transfer 5-28
Receiver Power Supply 5-30

6 ALIGNMENT PROCEDURES

6.1 Introduction 6-1
6.2 Test Equipment 6-1
6.3 Alignment Procedures 6-1
6.3.1 STL Frequency Alignment 6-4
6.3.2 Receiver Sensitivity 6-7
6.3.3 Receiver Selectivity 6-11
6.3.4 Transmitter Deviation and Receiver Output Level Calibration 6-13
6.3.5 Ultimate Signal-to-Noise Ratio 6-20
6.3.6 Distortion Alignment 6-23
6.3.7 Stereo Separation and Stereo Signal-to-Noise Ratio 6-26
6.3.8 Stereo Crosstalk 6-33
6.4 Module Adjustments 6-37
6.4.A Composite Audio Processor 6-38
6.4.B FMO Synthesizer 6-38
6.4.C Up Converter 6-43
6.4.D First Local Oscillator 6-43
6.4.E RF Amplifier 6-44
6.4.F Metering and Status 6-45
6.4.G Transmitter Control 6-46
6.4.H Power Supply 6-46
6.4.I Preselector Filter 6-46
6.4.J Preamplifier and First Mixer 6-47
6.4.K First Local Oscillator 6-48
6.4.L Double Converter 6-48
6.4.M Second and Third Local Oscillator 6-50
6.4.N FM Demodulator 6-51
6.4.O Composite Baseband Processor 6-52
6.4.P Metering and Status 6-53
6.4.Q Mute and Transfer 6-54
6.4.R Power Supply 6-54
6.5 General Troubleshooting Information 6-55
6.5.1 Transmitter Troubleshooting Procedure 6-55
6.5.2 Receiver Troubleshooting Procedure 6-56
6.6 Test Fixture Diagrams 6-57

7 RECOMMENDED SPARES

7.1 Introduction 7-1
7.2 Spare Transmitter Modules 7-1
7.3 Spare Receiver Modules 7-1
7.4 Spare Parts Kits 7-2

8 FACTORY TEST RESULTS 8-1

APPENDIX - STL PATH EVALUATION 9-1

ILLUSTRATIONS

Figure		Page
1-1	Transmitter front panel	1-6
1-2	Receiver front panel	1-9
1-3	Typical SNR curves	1-13
2-1	Typical Stereo Quieting Characteristics of PCL-606/C Receiver	2-5
2-2	Typical Selectivity Characteristics of PCL-606/C Receiver - Narrow IF Mode	2-7
4-1	Typical bench test setup	4-4
4-2	Typical PCL-606 transmitter RF connections	4-9
4-3	Typical PCL-606 receiver RF connections	4-10
4-4	Transmitter program and multiplex interconnections	4-11
4-5	Receiver program and multiplex interconnections	4-14
4-6	Main/standby transmitter interconnect	4-15
4-7	Main/standby receiver interconnect, PCL-606/PCL-606	4-17
4-8	Main/standby receiver interconnect, PCL-606/Other	4-18
4-9	Extension control panel connections	4-20
5-1	Simplified diagram - absolute value amplifier	5-10
5-2	Simplified diagram - absolute value amplifier	5-27
6-1	Test setup for frequency alignment	6-5
6-2	Sensitivity test setup	6-8
6-3	Selectivity test setup	6-11
6-4	Test setup for deviation alignment	6-14

6-5	Bessel null function waveforms	6-17
6-6	Test setup for MUX channel alignment	6-18
6-7	Test setup for signal-to-noise ratio measurement	6-21
6-8	STL distortion alignment	6-24
6-9	Stereo separation test setup	6-27
6-10	Swept separation waveform	6-29
6-11	Stereo crosstalk test setup	6-33
6-12	Nonlinear crosstalk	6-36
6-13	Test setup for FMO adjustment	6-40
6-14	Test setup for measuring the preselector insertion loss	6-47
6-15	50 Hz high-pass filter	6-58
6-16	75 microseconds de-emphasis network with 30 Hz high-pass filter	6-58
6-17	Audio amplifier	6-58
6-18	Stereo source selector	6-59

GLOSSARY

AFC	Automatic frequency control
AGC	Automatic gain control
FET	Field effect transistor
IC	Integrated circuit
IMD	Intermodulation distortion
IPA	Intermediate power amplifier
LED	Light-emitting diode
LO	Local oscillator
MUX	Multiplex
NC	Normally closed
NO	Normally open
PC	Printed circuit
RCVR	Receiver
SCA	Subsidiary communications authority
SRD	Step Recovery Diode
SNR	Signal-to-noise ratio
STL	Studio-to-transmitter link
THD	Total harmonic distortion
TTL	Transistor-transistor logic
XMTR	Transmitter

SECTION 1

SYSTEM CHARACTERISTICS

1.1 INTRODUCTION

The model PCL-606/C Studio-to-Transmitter Link (STL) is designed to convey composite FM stereo program material from a studio site to a transmitter site. The PCL-606/C also simultaneously conveys control and secondary programming subcarriers. This equipment may also be used to provide high-quality program transmission in intercity relay service.

The Receiver IF bandwidth and Transmitter deviation may be changed by the user to optimize the tradeoff between distortion and selectivity. The wideband mode yields highest performance in uncongested areas with 500 kHz channel spacings. In high density areas, the narrowband mode, utilizing 300 kHz channel spacings, allows for optimum performance.

The PCL-606 series of equipment is a family of equipment that can operate in several bands from 300 MHz through 1.7 GHz. This manual is for a composite system operating in the 940 MHz to 960 MHz region. This equipment has FCC authorization under Part 74, Subpart E for use in the 944 to 952 MHz frequency band.

1.2 SYSTEM SPECIFICATIONS

The system specifications for a composite PCL-606/C in the 940 - 960 MHz band are as follows:

Frequency Range	940-960 MHz
Channel Spacing Wide (Narrow) Band	500 kHz (300 kHz)
Frequency Response Wide (Narrow) Band	Composite: +/-0.1 dB (+/-0.2 dB) or better 30 Hz to 53 kHz, +/-0.3 dB (+/-1.0 dB) or better 53 kHz to 73 kHz
THD and IMD Wide (Narrow) Band	Stereo demodulated THD and IMD: 0.2% (0.3%) or less 30 Hz to 7.5 kHz, typically better than 0.1% (0.15%) at 1 kHz

	Convolved Stereo demodulation products: greater than 53 dB (50 dB) below the 400 Hz, 100% modulation ref. level from 7.5kHz to 15kHz
Stereo Separation Wide (Narrow) Band	48 dB (43 dB) or better 50 Hz to 15 kHz, typically 50 dB (45 dB) or better
Nonlinear Crosstalk, Subchannel to Main Channel: Wide (Narrow) Band	53 dB (50 dB) or better
Nonlinear Crosstalk, Main Channel to Subchannel: Wide (Narrow) Band	53 dB (50 dB) or better
Signal-to-Noise Ratio Wide (Narrow) Band	73 dB (70 dB) or better, typically 76 dB (73 dB) below 100% modulation, demodulated, de-emphasized left or right
Dimensions, Operating Temperature Range: Transmitter & Receiver	3.5" (8.9 cm) high 19" (48.3 cm) wide 16.5" (41.9 cm) deep 0 degree C to +50 degrees C
Emission Wide (Narrow) Band	500F9 (300F9)

1.2.1 Transmitter Specifications

FCC Authorization	Part 74, Subpart E, for the frequency band of 944 to 952 MHz
Type	Solid state, direct FM, frequency synthesized, crystal referenced
RF Power	5 watts minimum, 7 watts maximum.
RF Output Connector	Type N Female, 50 ohm
Deviation for 100% Modulation Wide (Narrow) Band	+/-50 kHz (+/-35 kHz)

Frequency Stability	Better than 0.00025% from 0 degrees C to +50 degrees C
Spurious and Harmonic Emission	More than 60 dB below carrier level
Modulation Capability	One program and two sub-carrier channels.
Modulation Inputs Wide (Narrow) Band	Composite: 3.5V peak-to-peak 6K ohms unbalanced, type BNC female connector. Multiplex: 1.5V peak-to-peak 4K ohms unbalanced, type BNC female connectors (2), frequency range 110-185 kHz (110 kHz)
Power Source	100/120/220/240 VAC, +/- 10%, 50/60 Hz, 70 Watts
Shipping Weight	12.7 kg (28 lb) domestic

1.2.2 Receiver Specifications

RF Input Connector	Type N female, 50 ohm
Sensitivity Wide (Narrow) Band	150 uV (210 uV) or less required for 60 dB SNR, left or right channel de-emphasized, demodulated
Selectivity Wide (Narrow) Band	3 dB IF bandwidth +/-100 kHz (+/-75 kHz); 60 dB IF bandwidth +/-450 kHz (+/-350 kHz); 80 dB IF bandwidth +/- 1 MHz (+/-1 MHz)
Modulation Outputs	Composite: 3.5V peak-to-peak 100 ohm unbalanced, type BNC female connector Multiplex: 1.5V peak-to-peak 100 ohm unbalanced, type BNC female connectors (2)
Power Source	100/120/220/240 VAC, +/-10%, 50/60 Hz, 30 Watts

Adjacent Channel Level to Degrade SNR by 3 dB Wide (Narrow) Band	+20 dBc (+10 dBc)
Input Third Order Intermodulation Intercept	0 dBm
Composite outputs (2) Standard (100 kHz option)	0.1 Hz-80 kHz (0.1 Hz-110 kHz) 3.5 V p-p, unbalanced BNC connector
Multiplex outputs (2) Standard (100 kHz option)	85-200 kHz (110-200 kHz) 1.5 V p-p, unbalanced BNC connector
Shipping Weight	12.7 kg (28 lb) domestic

1.3 SYSTEM FEATURES

In addition to establishing a new industry standard for performance, the PCL-606 incorporates many new and innovative features to aid in the installation, operation, and maintenance of a system. Some of the features are:

- Operation on wideband (500 kHz) or narrowband (300 kHz) channel spacings is user selectable via internal jumpers. Multiple sets of pre-aligned circuitry are utilized to render the changeover adjustment free.
- A PIN Diode Attenuator in the receiver to allow optimization of SNR performance in high-density, high-signal-strength areas.
- A wideband, adjustment-free, digital FM demodulator.
- Dual bandwidth ceramic, adjustment-free, very low distortion IF filters offering unprecedented selectivity.
- The choice of two selectable IF bandwidths to optimize distortion as a function of adjacent or alternate channel rejection.
- A built-in peak reading meter for all major functions.
- A four-decade logarithmic true signal strength meter.
- Built-in internal test metering capability.

- Important status functions implemented with two-color LED indicators.

- Designed to have a minimum of adjustments for trouble-free operation.

- Modular construction that provides excellent shielding and at the same time allows easy access to components.

- Built-in receiver switch-over circuits that permit a pair of PCL-606s to accomplish automatic switch-over upon detection of a fault without additional transfer panels.

It is recommended that the manual be studied at least through Section 5 before attempting to install the system.

1.4 OPERATIONAL CONTROLS

1.4.1 Purpose

This subsection describes the controls and adjustments of a PCL-606/C system that the user will encounter in normal operation and initial setup. The units once installed and set up require no further operator attention.

1.4.2 Transmitter Front Panel

The PCL-606 transmitter front panel depicted in Figure 1-1 contains eight LED indicators for the metering function. One of the LEDS is always on to indicate the function displayed on the panel meter. The function displayed may be changed by activating the METER FUNCTION switch up or down. Each activation causes the function to change by one step in the direction selected. The meter functions and scales used are:

Function	Scale	Units	Notes
FWD POWER	dB	dB	Power in dB relative to full output. 0 dB = full output.
REFL POWER	dB	dB	Power in dB relative to full output. 0 dB = 100% reflected power.
PGM LEVEL	dB	dB	0 dB = 3.5 V p-p input, 100% modulation.

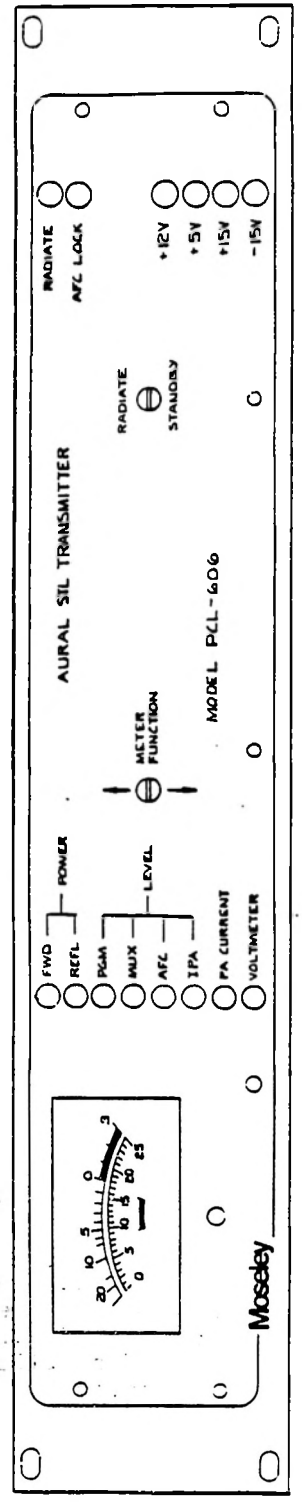

Figure 1-1
Transmitter Front Panel

MUX LEVEL Wide (Narrow) Band	Linear	kHz (0.7 kHz)	Deviation of main carrier by the subcarriers.
AFC LEVEL	Lower Arc	None	Meter should indicate within lower arc.
IPA LEVEL	Lower Arc	None	Meter should indicate within lower arc.
PA CURRENT	Linear	Tenths of Amperes	15 = 1.5 amps
VOLTMETER	Linear	Volts	Internal test probe socket.

The meter is an absolute value peak-reading type with fast ballistics, since the purpose of the meter is to observe the peak values of modulation which affect the deviation of the Transmitter. When using the meter in the VOLTMETER mode, a bicolor LED located near the test probe socket will indicate the polarity of the voltage being measured (red = +, green = -, and orange = ac).

Four power supply LEDs indicate the condition of each of the power supplies. The normal indication is green. A power supply failure will cause the LED to extinguish.

The two transmitter status LEDs are of the two-color, red-green type. The AFC LOCK LED is green when the FMO Synthesizer has achieved a lock condition. When AFC LOCK is red, it indicates that an unlock condition exists. This inhibits any radiation of RF power, resulting in the RADIATE LED being red. When power is initially applied to the Transmitter, it is normal for the AFC LOCK LED to be red for several seconds.

The RADIATE LED will be green when the Transmitter is supplying RF power and red when not supplying RF power. This LED is controlled by the internal interlock controls, the RADIATE/STANDBY switch, and any external logic associated with main/standby operation.

The RADIATE/STANDBY switch functions as an on/off switch for the RF power output. In the RADIATE position, the RF power will be on provided all of the internal interlocks are enabled. In the STANDBY position, RF radiation is controlled by external switching control and the internal interlocks.

1.4.3 Receiver Front Panel

The operation of the receiver front panel controls is very similar to the transmitter controls. Figure 1-2 shows the receiver front panel.

A METER FUNCTION switch can step up or down the selection of the function to be displayed on the meter. The receiver meter has four scales. The top scale is calibrated in dB (absolute value peak indicating) followed by a four-decade logarithmic scale, which in turn is followed by a 0 to 25 linear scale. A small center reference scale on the bottom is used for relative go/no-go indications. The scale used for each function is:

Function	Scale	Units	Notes
PGM LEVEL	dB	dB	0 dB is 3.5 V p-p
MUX LEVEL Wide (Narrow) Band	Linear	kHz (0.7 kHz)	Deviation of main carrier by the subcarriers.
RF LEVEL	Log	micro-volts	RF signal level at input of receiver.
LO1 LEVEL	Lower arc	None	Meter should indicate within lower arc.
LO2 LEVEL	Lower arc	None	Meter should indicate within lower arc.
LO3 LEVEL	Lower arc	None	Meter should indicate within lower arc.
RF GAIN	Linear	Volts	15 = full gain, 0 = max attn.
VOLTMETER	Linear	Volts	Internal test probe socket.

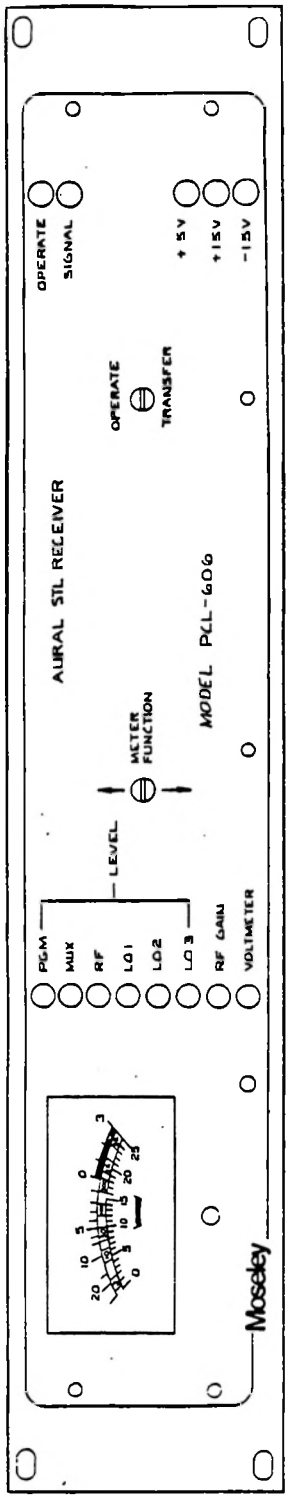

Figure 1-2
Receiver Front Panel

The three power status LEDs indicate green if the respective power supply is operating and are not illuminated if the supply voltage is not present.

Two dual-color status LEDs indicate the operational status of the Receiver; these are SIGNAL and OPERATE. The SIGNAL LED is green when there is sufficient RF signal to exceed a user-established threshold of RF signal that correlates to the minimum SNR that is acceptable to the user. When the SIGNAL LED is red, there is insufficient signal to meet the minimum SNR requirements and the Receiver is placed in a non-operating muted condition, which is indicated by a red OPERATE LED. When the receiver is operating properly, the OPERATE LED is green.

The OPERATE/TRANSFER switch is two-position, with the TRANSFER position being momentary. It is used to cause a switchover to an alternate PCL-606 Receiver when a pair is used in a main/standby configuration. Only one receiver will have its OPERATE LED green; this is the receiver supplying the program and multiplex material.

1.4.4 Transmitter Operational Adjustments

Without removing the cover of the Transmitter, the user has access to several operational adjustments. These adjustments are primarily used to balance the various program levels when used in main/standby configurations. The locations of these adjustments are shown on the transmitter cover.

The PGM LEVEL, MUX 1 LEVEL, and MUX 2 LEVEL controls are used to establish the nominal levels for program and multiplex inputs. If the user's voltages are not the factory-established standard of 3.5 volts peak-to-peak for program material or 1.5 volts peak-to-peak for each multiplex input, then these adjustments may be used to compensate for the difference. When a steady-state reference level at 400 Hz is applied at the normal station program inputs (i.e., before limiting and stereo generation) and with PGM LEVEL selected on the front panel, adjust the PGM LEVEL control to indicate 0 dB on the transmitter meter when the station program level meters indicate 100% modulation and/or 0 dB.

Applying one subcarrier at a time (the other subcarrier disabled) with the MUX LEVEL meter function selected on the front panel, adjust the corresponding MUX level control to indicate the deviation of the main carrier by the subcarrier. In the wideband mode a nominal meter indication of of 5 (e.g. +/-5 kHz deviation or 10% injection) is used for

110 kHz and lower frequency subcarriers (MUX channel 1), while a nominal meter indication of 7.5 (e.g. +/- 7.5 kHz deviation or 15% injection) for subcarriers above 140 kHz (MUX channel 2) would be appropriate. In the narrowband mode a nominal meter indication of 5 (e.g. +/-3.5 kHz deviation or 10% injection) is used for 67 or 92 kHz subcarriers (MUX channel 1), while a nominal meter indication of 7.5 (e.g. +/-5.25 kHz deviation or 15% injection) is used for a 110 kHz or 185 kHz subcarrier (MUX channel 2). When both subcarriers are applied, the meter indicates the total main carrier deviation. NOTE that the meter indicates the subcarrier level and not the modulation on the subcarrier.

1.4.5 Receiver Operational Adjustments

Four operational adjustments are accessible through the top cover of the Receiver. These adjustments are normally made at the time of installation to tailor the PCL-606 Receiver to the user's environment. The locations of the adjustments are identified on the receiver cover.

The BASEBAND LEVEL control establishes the output level of the composite signal from the Receiver. It has a nominal value of 3.5 volts peak-to-peak for 100% modulation when shipped from the factory. NOTE: The BASEBAND LEVEL control affects the MUX as well as the composite output level; therefore, if it is changed, a corresponding change in the MUX LEVEL control will be necessary to bring the MUX levels into line.

The MUX LEVEL control establishes the output voltage of all subcarrier outputs. It is initially set at 1.5 volts peak-to-peak for a subcarrier that deviates the main carrier 5 kHz in the wideband mode or 3.5 kHz in the narrowband mode (MUX channel 1), and approximately 2.25 V p-p for a subcarrier that deviates the main carrier 7.5 kHz in the wideband mode or 5.25 kHz in the narrowband mode (MUX channel 2). This control has no effect on the composite output level.

The MUTE THRESHOLD control establishes the RF signal level below which the Receiver becomes muted. This control is factory set at the RF signal level that produces approximately a 45 dB demodulated stereo SNR. A counterclockwise rotation of this control decreases the threshold voltage. In the fully counterclockwise direction, the Receiver in most cases will not mute in the absence of a signal.

The RF GAIN adjustment is a control designed to optimize the SNR of the Receiver by minimizing the effects of RF intermodulation distortion. There are two distinct cases where

The RF GAIN adjustment is a control designed to optimize the SNR of the Receiver by minimizing the effects of RF intermodulation distortion. There are two distinct cases where this control should be used. This first is where the receiver RF signal exceeds 1500 microvolts. The RF GAIN control should be adjusted so the receiver signal is approximately 1500 microvolts as indicated by the front panel meter.

The second case where the RF GAIN control is valuable is when a number of other signals in the band exceed the desired signal. To achieve optimum results, establish a 400 Hz reference level from a demodulated stereo channel on an audio analyzer, and then remove the modulation. Use the RF GAIN adjustment to reduce the RF input while observing the resulting noise on the audio analyzer. If any interference is being caused by other signals, the SNR will improve until the signal is reduced to a point where the lack of on-channel signal begins to contribute more to the noise. Adjust for a peak in SNR.

Figure 1-3 depicts the basic shape of the SNR curve with and without high-level signals in the band. It should be emphasized that it is not necessarily only high-level adjacent channels that can cause interference. There are many combinations of signals that can give rise to intermodulation distortion, which will cause the resultant product to fall within the desired passband.

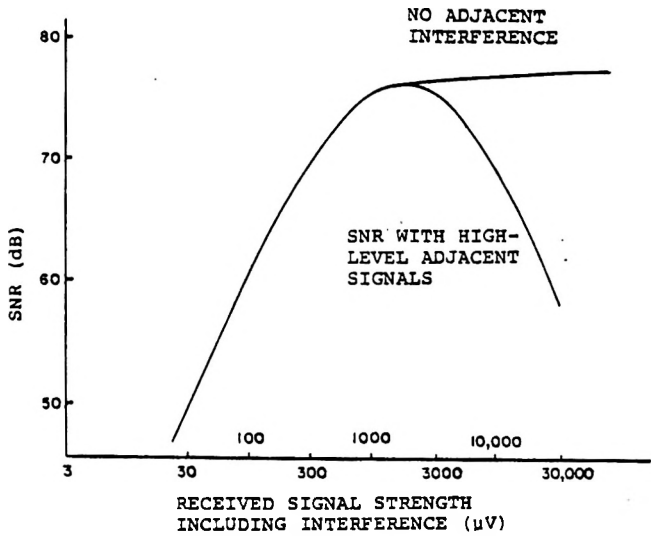

Figure 1-3
Typical SNR Curves

SECTION 2

SYSTEM DESCRIPTIVE INFORMATION

2.1 TRANSMITTER

Block and Level 92D1296
Schematic 91D7388
Assembly 21D2757 Sheets 8 & 9

The PCL-606/C transmitter is a high-fidelity broadband FM transmitter operating in the 950 MHz STL band with a power output of 5 to 7 watts. It is capable of transmitting the composite stereo signal and two multiplex subcarriers with little degradation of signal quality over one link. The linearity and FM noise characteristics of the direct FM oscillator are exceptional. The transmitter is modular in construction and operation, and the system description given below follows the signal flow through the various modules.

Composite Audio Processor

Three signal inputs are provided to the Composite Audio Processor module: one composite signal and two multiplex signals. The composite input is 3.5 volts peak-to-peak and the input impedance is 5.7 kilohms. The multiplex inputs are 1.5 volts peak-to-peak. Level adjustments are provided for all three signals, which are then fed to summing amplifiers. They are combined into a single signal and passed to the FMO Synthesizer module.

FMO Synthesizer

The composite signal (Stereo Composite plus MUX) is used to modulate the frequency modulated oscillator (FMO) in the FMO Synthesizer module. The FMO is 60-80 MHz ultralinear, very low noise. This oscillator is phase locked to a crystal-controlled reference oscillator; the phase lock loop contains the frequency programming switches which allow the synthesizer to be changed in frequency by 10 kHz increments. The RF output of the 60-80 MHz FMO then goes through a low pass filter to attenuate any harmonics. With 100% composite stereo modulation, the RF signal will deviate +/-50 kHz in the wideband mode or +/-35 kHz in the narrowband mode from the chosen center frequency. The output power at this point is approximately 2 milliwatts.

950 MHz Up Converter

To preserve the low noise and low distortion characteristics of the FMO, the traditional method of multiplying up to 950 MHz was avoided. Instead, a scheme was chosen consisting of a single up-conversion utilizing a high-side local oscillator operating at 1020 MHz. This process takes place in the Up Converter Module. The signal from the FMO enters one port of the double balanced mixer; the signal from the first LO at 1020 MHz enters the LO port of the double balanced mixer. The output of the mixer contains both the sum and difference frequencies of the two input signals. The frequency required is the lower product at approximately 950 MHz. This is selected by the 950 MHz bandpass filter, which eliminates all other mixer products. The output level at this point is approximately 10 dBm. The signal is then fed to the intermediate power amplifier (IPA), which has about 27 dB of gain; this raises the level of the signal sufficiently to drive the final RF amplifier.

The output frequency of the Up Converter is controlled by the frequency set by the FMO synthesizer. This can be set in 10 kHz steps from 60-80 MHz. The lower product of the 60-80 MHz signal mixed with the fixed 1020 MHz output of the first LO multiplier determines the frequency at the output of the Up Converter module, yielding a frequency range between 940-960 MHz.

First Local Oscillator

The First Local Oscillator and Multiplier module contains a 51 MHz overtone crystal oscillator, which is then buffered. The crystal itself is controlled in a 65 degree C oven to maintain the frequency of this module +/-2 parts per million over the operating temperature range. The output of the buffer amplifier is fed to the multiplier chain, which consists of two stages of frequency doublers and a step-recovery diode multiplier with a multiplication factor of 5. This provides an overall multiplication factor of 20. The output of the step-recovery diode multiplier is filtered through a bandpass filter to select the desired frequency of 1020 MHz. The output power of this module is approximately +7 dBm, which is fed to the Up Converter module.

RF Amplifier

The RF Amplifier module internally consists of three stages of tuned film hybrid amplifiers, which take the 50 mW input signal and raise it to the nominal 6 Watt transmitter output. The output of the RF amplifier is passed through a low pass filter to attenuate all higher order harmonics to a

level of at least -60 dBc. The output circuit contains two directional couplers with detectors that provide an indication of the forward and reflected power of the RF amplifier.

Transmitter Control

The Transmitter Control board has several functions. One of these is to sense the output of the FMO Synthesizer module. If this module goes out of lock, then the radiate control logic circuit in the Transmitter Control board provides a signal to the power supply to turn off the 12.5 volt power to the IPA and RF amplifier, causing the transmitter to stop radiating. This board contains a differential amplifier stage, which senses the voltage drop across a current sampling resistor in the RF amplifier to give a front panel meter indication of final amplifier current. This board also contains the buffer amplifiers for sending the forward power and AFC signals to the rear panel remote sampling connector.

Metering and Status

The Metering and Status board is used to monitor forward power, reflected power, program level, MUX level, AFC level, intermediate power amplifier output level, and RF amplifier output-stage current. These functions are selected via the front panel METER FUNCTION switch. The signals are routed through a multiplex IC to an absolute-value peak sampling amplifier, which drives the analog meter after the signal has been processed by a meter ballistics compensator to give the meter an extremely rapid rise time. This module also contains two bicolor red-green light emitting diodes (LEDs), which are the front panel indicators for RADIATE and AFC LOCK status. Also included are four green LEDs to indicate the presence of +15 V, -15 V, +5 V, and +12 V from the Power Supply module.

Power Supply

The Transmitter Power Supply module converts any of four ac input voltages (100, 120, 220, or 240 Vac) into the one unregulated and four regulated dc voltages required for the operation of the transmitter. The +12.5 V, 2.5 A output has a digital enable which allows the Transmitter Control board in conjunction with the FMO Synthesizer to shut the Transmitter down during the periods of loss of AFC lock on the FM oscillator. The other outputs are +15 V and -15 V at 250 mA and +5 V at 250 mA. This module also provides an unregulated 9 V supply, which is used to heat the crystal oven in the first local oscillator.

2.2 RECEIVER

Block and Level	92D1295
Schematic	91D7385
Assembly	21D2739 Sheets 8 & 9

The PCL-606/C Receiver is a high-fidelity composite FM receiver operating in the 950 MHz STL band with an input sensitivity of less than 150 microvolts for 60 dB stereo demodulated SNR. It is capable of receiving the composite stereo signal and two multiplex subcarriers with little degradation of signal quality over one link. The high dynamic range, selectivity, and low noise characteristics of the receiver are exceptional. The receiver is modular in construction and operation, and the system description below follows the signal flow through the various modules.

Preselector Filter

The antenna input signal is first passed through the Preselector Filter module, which is a five-pole interdigital (comb-line) bandpass filter with very low insertion loss. This filter attenuates energy that would be fed to the preamplifier and first mixer at the image frequency and also ensures that any high-level, out-of-band signals, will not block the subsequent amplifier stages.

Preamplifier and First Mixer

The output of the preselector filter is fed to the 950 MHz Preamplifier and First Mixer module. This module establishes the quieting characteristics of the Receiver. Typical Receiver performance is shown in Figure 2-1.

The input signal is first passed through the PIN diode attenuator, which allows the user to adjust the RF signal levels for optimum output signal-to-noise ratio. The signal is then split by a 3-dB 90 hybrid coupler and amplified by two low-noise amplifiers. It is recombined by a similar coupler and then passed through an image noise filter to the first double balanced mixer.

The couplers and double amplifiers provide a very high dynamic range preamplifier to minimize overload problems in high-density RF environments. High-side injection is used for the first local oscillator signal into the double balanced mixer at about 1020 MHz. The output at 70 MHz is amplified by the first IF amplifier, which is a low-noise, field-effect amplifier with high dynamic range. The signal is passed through a 70 MHz matching network to the 50 ohm output port of the Preamplifier and First Mixer module.

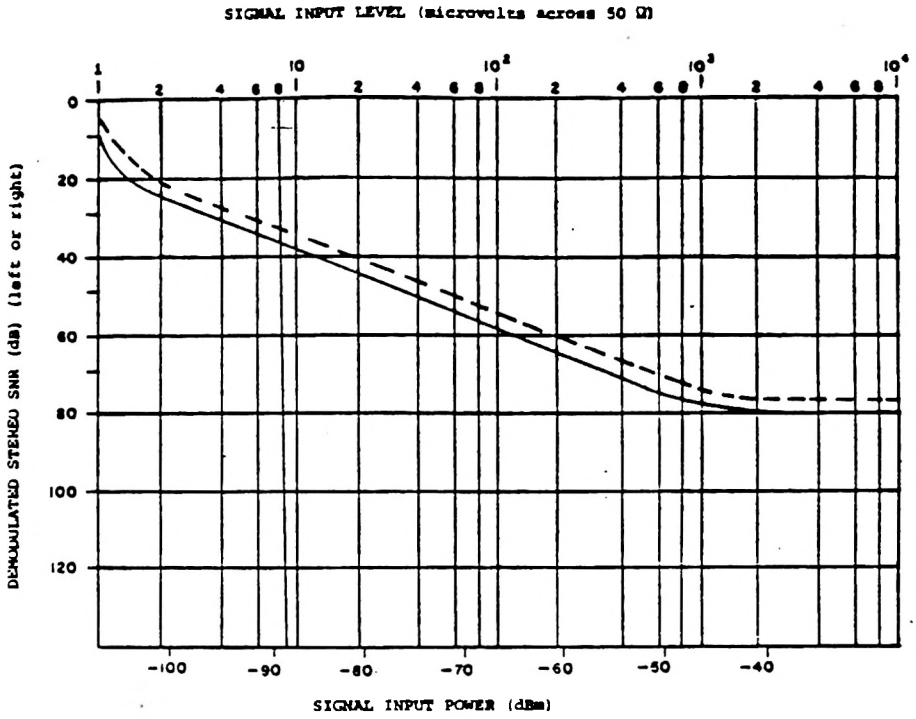

——— = Wideband Mode

- - - - = Narrowband Mode

Figure 2-1
Typical Stereo Quieting Characteristics of PCL-606/C Receiver

First Local Oscillator and Multiplier

The First Local Oscillator and Multiplier module includes an oven-controlled overtone crystal oscillator. The oscillator signal is buffered and passed through two stages of doubling. The output signal is then passed through a step-recovery diode multiplier, where it is multiplied by 5. At this point the overall multiplication is 20. The output signal is selected by taking the output of the step-recovery diode multiplier and passing it through the 1020 MHz bandpass filter. This signal, whose level is about +7 dBm, is fed to the Preamplifier and First Mixer module.

Double Converter

The signal is then fed to the Double Converter module, which establishes the selectivity characteristics of the Receiver. A plot of the typical selectivity is shown in Figure 2-2.

The input signal is converted from 70 MHz to 3 MHz in two stages. It passes to the second 70 MHz IF amplifier and a fourth-order 70 MHz bandpass filter. From there it enters the input of the second double balanced mixer, where it is mixed with the 80.7 MHz second local oscillator signal. The output of this mixer then feeds the 10.7 MHz IF amplifier, which consists of three amplifier stages and three ceramic phase-linear bandpass filters. Two filters are jumper-selectable to allow the user to establish the desired receiver bandwidth.

The output of the third filter is amplified and passed on to the third double balanced mixer, which uses the third LO signal at 13.7 MHz. The output of this mixer is then bandpass filtered through a phase-linear 3 MHz network and passed on to the FM Demodulator module.

Second and Third Local Oscillator

The Second and Third Local Oscillator module provides two local oscillator signals to the Double Converter module. The second local oscillator consists of a fundamental crystal oscillator operating at 20.175 MHz. The LO signal is buffered and then multiplied by four using two push-push doublers. The output is bandpass filtered for purity and sent to the second double balanced mixer. The frequency of the second local oscillator is adjustable by about +/-20 kHz; this is used to center the 10.7 MHz IF signal in the middle of the bandpass characteristics of the ceramic IF filters in the Double Converter module. The output level of the second local oscillator is approximately +7 dBm.

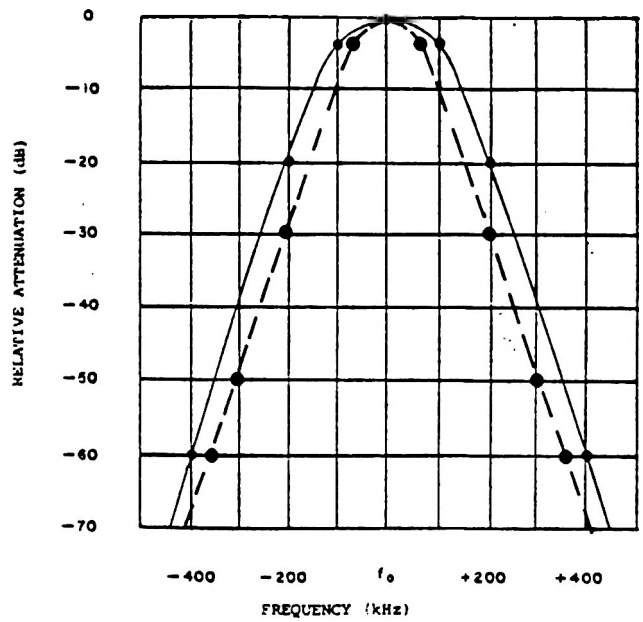

——— = Wideband Mode

- - - - = Narrowband Mode

Figure 2-2
Typical Selectivity Characteristics of PCL-606/C Receiver
Narrow IF Mode

The third local oscillator consists of a 13.7 MHz fundamental crystal-controlled oscillator followed by a buffer amplifier and a 13.7 MHz low-pass filter. This signal at about +7 dBm is then fed to the third double balanced mixer in the Double Converter module.

FM Demodulator

The FM Demodulator module has three major functions. One is to extract the baseband information from the FM carrier. The second function is to generate the RF signal strength voltage that is applied to the meter in the RF LEVEL position, and the third is to establish the mute or squelch threshold of the receiver. The signal is first passed through a 3 MHz IF amplifier and a phase-linear 3 MHz bandpass filter. At this point the signal is split and sent to both the FM demodulator and the log IF amplifier. For FM demodulation, the signal runs through a four-stage limiting IF amplifier, the output of which passes on to the ultra-linear pulse-counting FM demodulator. This demodulator is extremely wideband and adjustment free. The output of the FM demodulator is low-pass filtered and sent to a low noise baseband amplifier, which raises the signal level to a useful system level. The output is then sent to the Composite Baseband Processor module.

The signal from the 3 MHz IF bandpass filter is also sent to four-stage logarithmic IF amplifier and amplitude detectors to generate the logarithmic signal used in the RF signal strength metering circuit. The output voltage of this circuit allows meaningful readings to be taken of RF levels over a range of 3 microvolts to about 3 millivolts. This signal is sent to the front panel metering circuit to indicate input RF level. This signal also goes to the mute comparator, where it is compared against an adjustable reference to set the mute or squelch threshold of the Receiver. The comparator output is sent to the Mute and Transfer module.

Composite Baseband Processor

The main functions of the Composite Baseband Processor module are to split the composite signal into two frequency bands: 0.1 Hz to 80 kHz for composite, and 85 kHz to 200 kHz (85 to 130 kHz in the narrowband mode) for MUX. NOTE: In the 110 kHz filter version of the PCL-606/C, the Composite band spans 0.1 Hz to 110 kHz, and the MUX passband extends from 110 kHz to 200 kHz. However, in the narrowband mode of the 110 kHz filter version the 110 to 200 kHz MUX output is disabled due to filtering requirements. If the use of a 185

kHz subcarrier is anticipated, Jumper E3 should be left in the (WB) position. This module also contains the FET mute switch, which is controlled by the mute comparator output of the Mute and Transfer module. The signal is then passed through a high-frequency amplitude corrector, which compensates for the baseband high-frequency roll-off caused by the 10.7 MHz IF bandpass filters, to restore proper amplitude response to the composite baseband signal.

The signal is then fed to an audio amplifier and an 80 kHz composite low-pass filter. The output of this filter passes through an active group delay equalizer, which compensates for the group delay variations of the low-pass filter. This signal is then buffered by an output amplifier that provides 3.5 V peak-to-peak output for 100% modulation. The output of the high-frequency amplitude corrector is also passed to an 80 kHz MUX high-pass filter and then goes to the MUX amplifier. The output of this amplifier drives a 200 kHz MUX low-pass filter, which is then buffered to yield the MUX nominal output of 1.5 V peak-to-peak.

Metering and Status

The Receiver Metering and Status board measures program level, MUX level, the RF signal strength level, the output levels of the three local oscillators, and the RF gain voltage. One of these voltages or a voltage at TP1, the meter probe input, is selected through a multiplex IC switch, which is controlled by the front panel METER FUNCTION switch. The output signal is then fed to an absolute-value peak detecting amplifier and a meter ballistics compensator. After processing by the ballistics compensator to give the meter a very rapid but controlled response time, the signal is fed to the front panel meter.

This module contains the front panel LEDs. Two bicolor red-green LEDs indicate the status of operate or standby and whether or not there is adequate signal strength to overcome the receiver's preset mute threshold. There are also three green LEDs to indicate the presence of the +15 V, -15 V, and +5 V regulated supplies.

Mute and Transfer

The Mute and Transfer module provides for automatic changeover between two receivers where one is intended for hot standby service. This module contains the logic circuit to determine which of the two receivers is capable of operating. It also contains the relay which will physically disconnect the outputs of the receiver not in service. This allows the composite and MUX outputs of the two receivers to

be bridged together to provide a single, switched, program line and a single, switched MUX line. The Mute and Transfer module also contains the RFI filtering and shielding of the Receiver input/output lines.

Power Supply

The Receiver Power Supply module converts one of four possible ac input voltages (100, 120, 220, or 240 Vac) to the three regulated dc voltages and one unregulated dc voltage required to operate the receiver. The regulated voltages are +15 V and -15 V at about 500m A, +5 V at 500m A and +9 V unregulated, which is used to power the crystal oven in the first local oscillator.

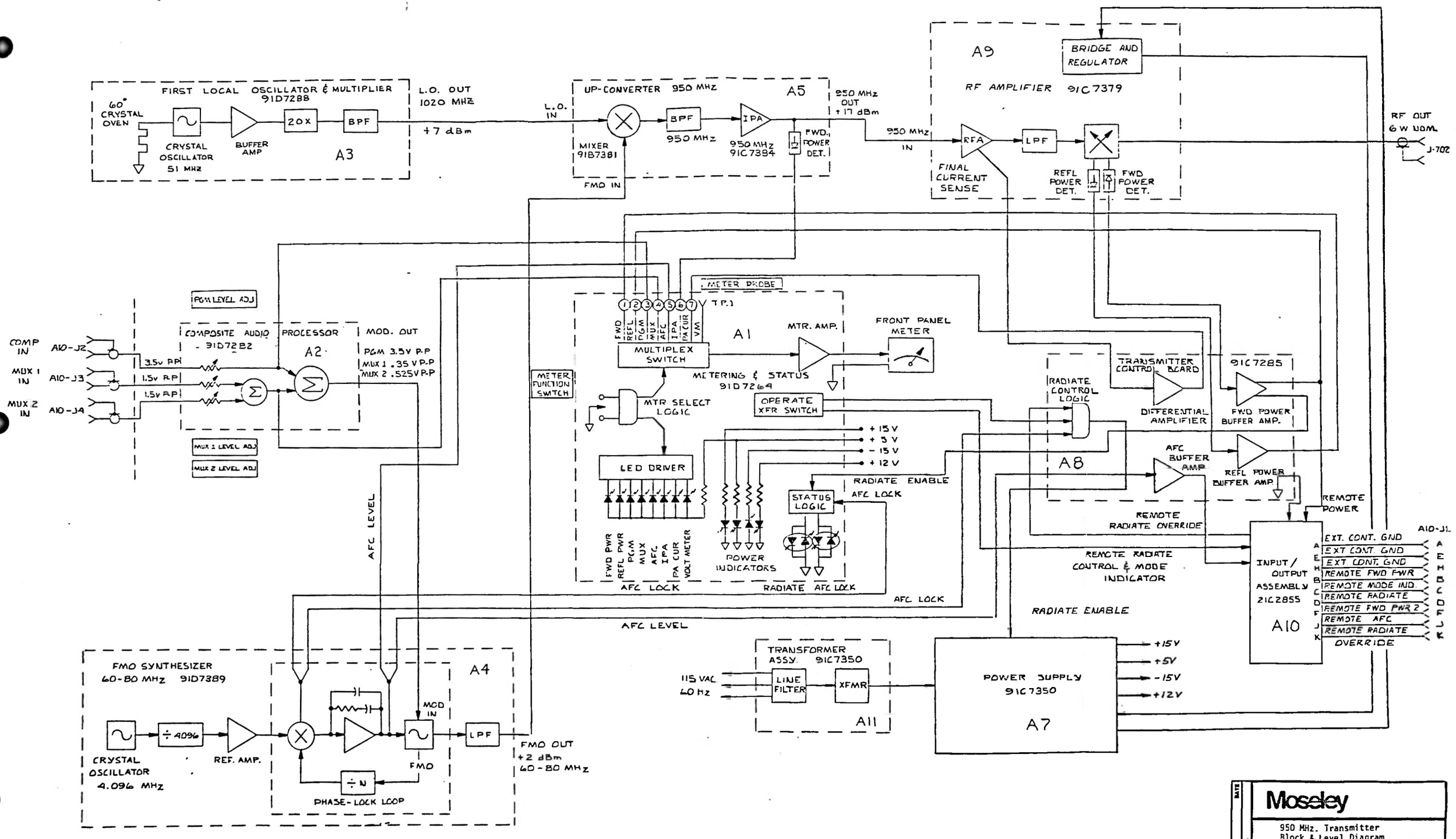

Moseley

950 MHz. Transmitter
Block & Level Diagram

92D1296 A

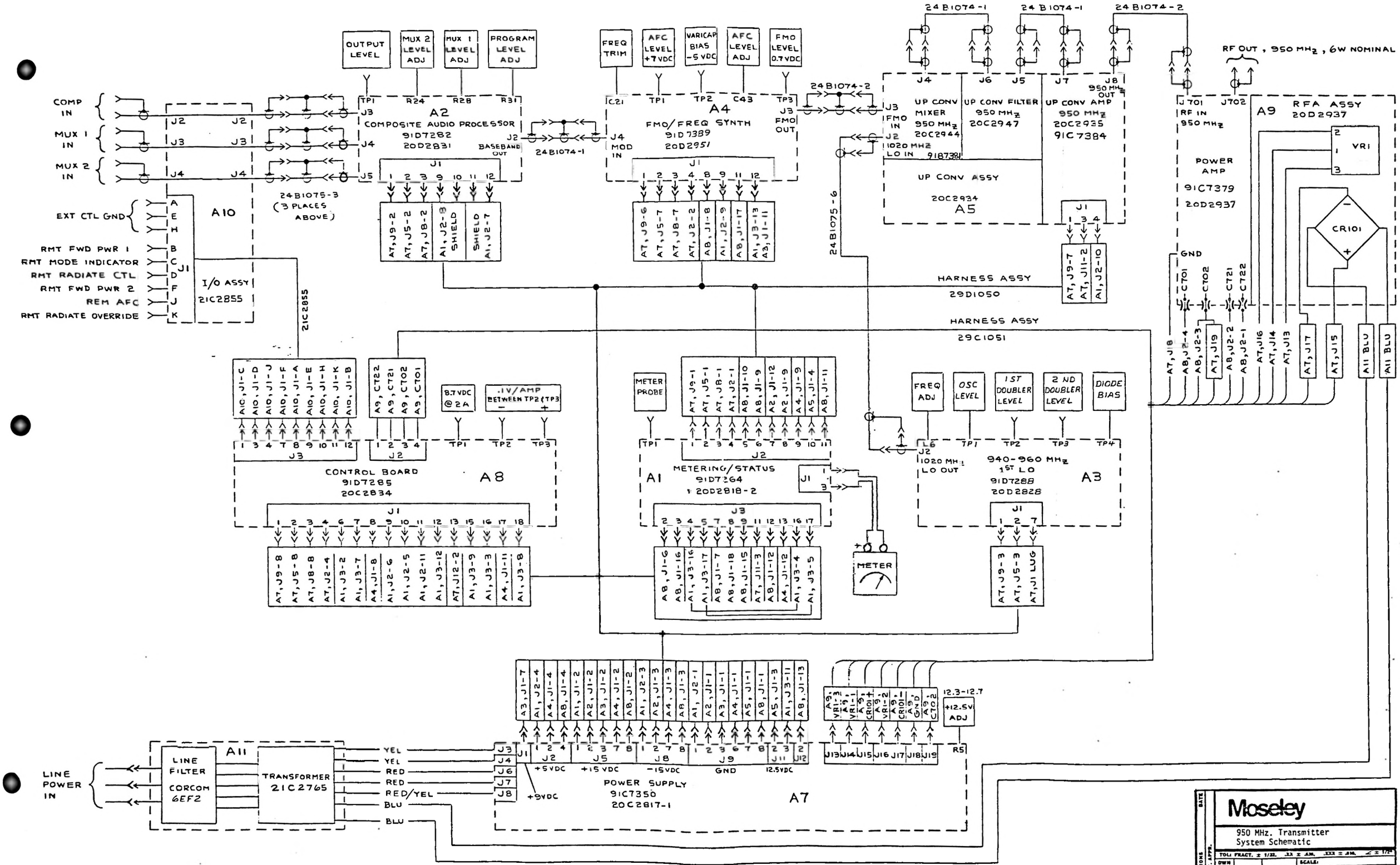
COMP IN
MUX 1 IN
MUX 2 IN
EXT CTL GND
RMT FWD PWR 1
RMT MODE INDICATOR
RMT RADIATE CTL
RMT FWD PWR 2
REM AFC
RMT RADIATE OVERRIDE
A10
I/O ASSY
21C2855
24B1075-3
(3 PLACES ABOVE)
OUTPUT LEVEL
MUX 2 LEVEL ADJ
MUX 1 LEVEL ADJ
PROGRAM LEVEL ADJ
A2
COMPOSITE AUDIO PROCESSOR
91D7282
20D2831
BASEBAND OUT
24B1074-1
FREQ TRIM
AFC LEVEL +7 VDC
VARICAP BIAS -5 VDC
AFC LEVEL ADJ
FMO LEVEL 0.7 VDC
A4
FMO/FREQ SYNTH
91D7389
20D2951
MOD IN
FMO OUT
24B1074-2
24B1075-6
UP CONV MIXER 950 MHz
20C2944
1020 MHz LO IN
UP CONV FILTER 950 MHz
20C2947
UP CONV AMP 950 MHz
20C2935
91C7384
950 MHz OUT
UP CONV ASSY
20C2934
A5
HARNESS ASSY
29D1050
HARNESS ASSY
29C1051
RF OUT, 950 MHz, 6W NOMINAL
J701 RF IN 950 MHz
J702
A9
RFA ASSY
20D2937
POWER AMP
91C7379
20D2937
VR1
CR101
GND
C701
C702
C721
C722
21C2855
CONTROL BOARD
91D7285
20C2834
A8
B.7 VDC @ 2A
.1V/AMP BETWEEN TP2 (TP3 − +)
METER PROBE
METERING/STATUS
91D7264
20D2818-2
A1
METER
FREQ ADJ
OSC LEVEL
1ST DOUBLER LEVEL
2 ND DOUBLER LEVEL
DIODE BIAS
1020 MHz LO OUT
940-960 MHz 1ST LO
91D7288
20D2828
A3
LINE POWER IN
LINE FILTER CORCOM 6EF2
A11
TRANSFORMER 21C2765
YEL
YEL
RED
RED
RED/YEL
BLU
BLU
+5VDC
+15 VDC
−15VDC
GND
12.5VDC
+9VDC
POWER SUPPLY
91C7350
20C2817-1
A7
12.3-12.7
+12.5V ADJ
R5
Moseley
950 MHz. Transmitter
System Schematic
91D7388
A

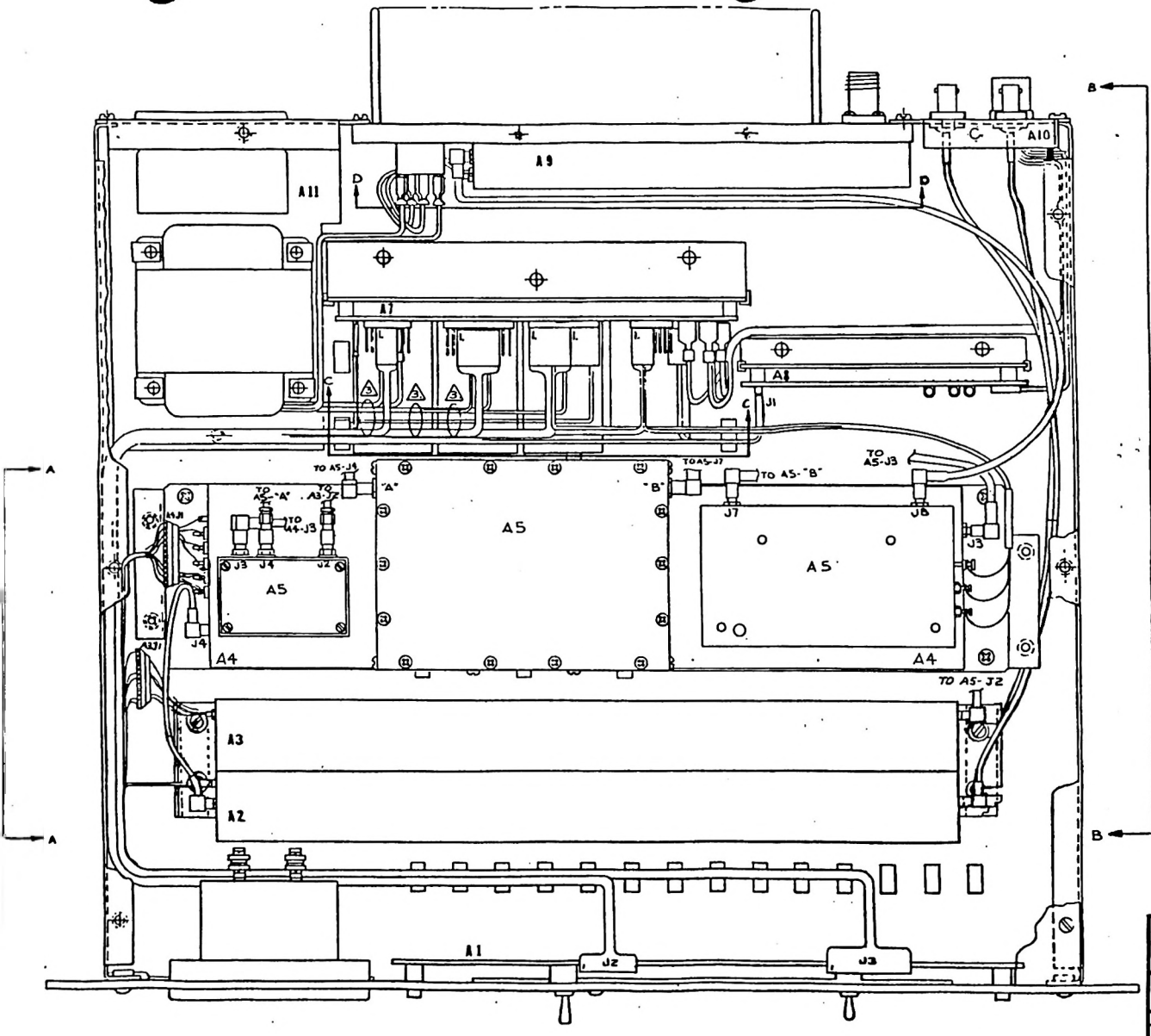

All views are shown overleaf

Moseley

Xmtr. Assembly PCL - 606/C

TOL: FRACT. ± 1/32, .XX ± .030, .XXX ± .005, ∠ ± 1/2°

DRN | CHK | ENG | SCALE:

2102757 | W1

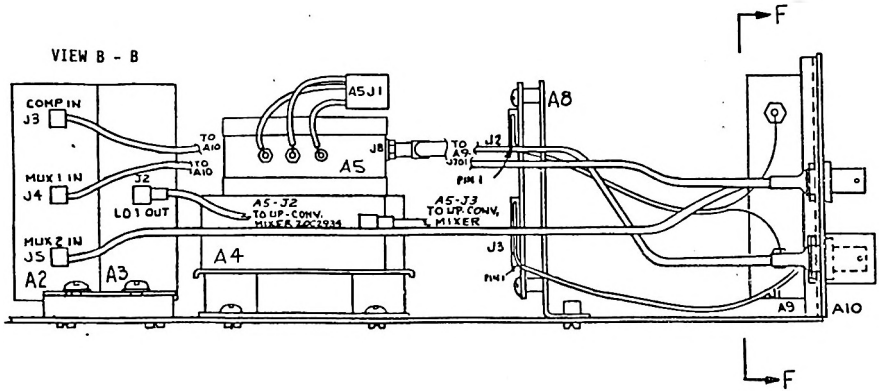

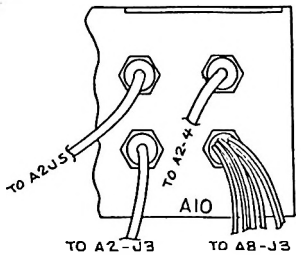

VIEW F - F

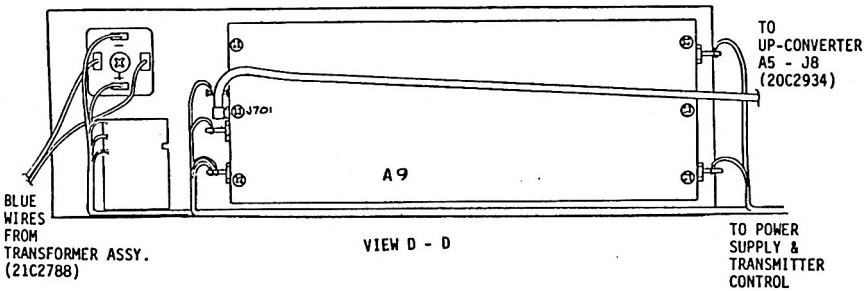

VIEW D - D

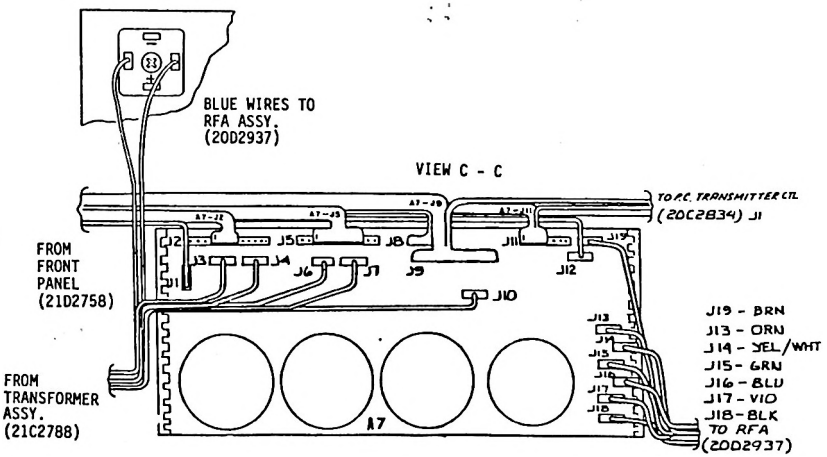

CONNECTIONS AND WIRE COLORS FOR POWER SUPPLY

FROM FRONT PANEL	TO J1 — YEL	FROM FRONT PANEL	TO J11 — BRN
FROM FRONT PANEL	TO J2 — ORN	FROM TRANSMITTER	TO J12 — WHT
FROM TRANSFORMER	TO J3 — YEL	FROM RFA ASSY.	TO J13 — ORN
FROM TRANSFORMER	TO J4 — YEL	FROM RFA ASSY.	TO J14 — YEL/WHT
FROM FRONT PANEL	TO J5 — RED	FROM RFA ASSY.	TO J15 — GRN
FROM TRANSFORMER	TO J6 — RED	FROM RFA ASSY.	TO J16 — BLU
FROM TRANSFORMER	TO J7 — RED	FROM RFA ASSY.	TO J17 — VIO
FROM FRONT PANEL	TO J8 — BLU	FROM RFA ASSY.	TO J18 — BLK
FROM FRONT PANEL	TO J9 — BLK	FROM RFA ASSY.	TO J19 — BRN
FROM TRANSFORMER	TO J10 — RED/YEL		

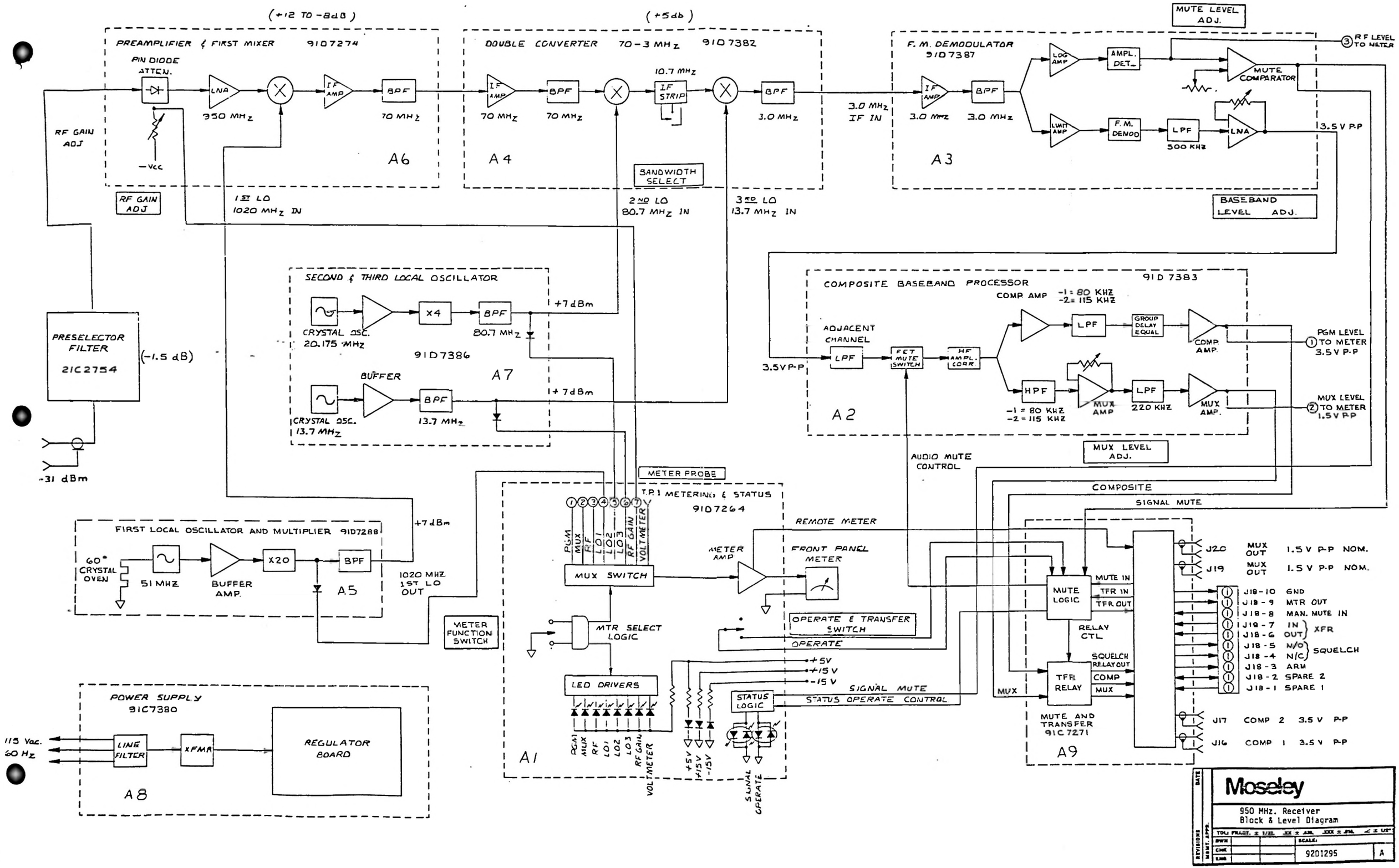
(+12 TO -8dB)
PREAMPLIFIER & FIRST MIXER 91D7274
PIN DIODE ATTEN.
LNA
350 MHz
IF AMP
BPF
70 MHz
A6
RF GAIN ADJ
-Vcc
RF GAIN ADJ
1ST LO 1020 MHz IN
(+5dB)
DOUBLE CONVERTER 70-3 MHz 91D7382
IF AMP
70 MHz
BPF
70 MHz
10.7 MHz
IF STRIP
BPF
3.0 MHz
A4
BANDWIDTH SELECT
2ND LO 80.7 MHz IN
3RD LO 13.7 MHz IN
3.0 MHz IF IN
F.M. DEMODULATOR 91D7387
IF AMP
3.0 MHz
BPF
3.0 MHz
LOG AMP
AMPL. DET.
MUTE LEVEL ADJ.
MUTE COMPARATOR
LIMIT AMP
F.M. DEMOD
LPF
500 KHz
LNA
3.5 V P-P
A3
BASEBAND LEVEL ADJ.
RF LEVEL TO METER
PRESELECTOR FILTER 21C2754
(-1.5 dB)
-31 dBm
SECOND & THIRD LOCAL OSCILLATOR
CRYSTAL OSC. 20.175 MHz
X4
BPF
80.7 MHz
+7dBm
91D7386
A7
BUFFER
CRYSTAL OSC. 13.7 MHz
BPF
13.7 MHz
+7dBm
COMPOSITE BASEBAND PROCESSOR 91D7383
COMP. AMP -1 = 80 KHz -2 = 115 KHz
ADJACENT CHANNEL
LPF
FET MUTE SWITCH
HF AMPL. CORR
LPF
GROUP DELAY EQUAL
COMP. AMP.
3.5VP-P
HPF
-1 = 80 KHz -2 = 115 KHz
MUX AMP
LPF
220 KHz
MUX AMP.
A2
MUX LEVEL ADJ.
PGM LEVEL TO METER 3.5 V P-P
MUX LEVEL TO METER 1.5 V P-P
AUDIO MUTE CONTROL
COMPOSITE
SIGNAL MUTE
METER PROBE
T.P.1 METERING & STATUS 91D7264
PGM MUX RF LO1 LO2 LO3 RF GAIN VOLTMETER
MUX SWITCH
METER AMP
REMOTE METER
FRONT PANEL METER
OPERATE & TRANSFER SWITCH
OPERATE
MTR SELECT LOGIC
LED DRIVERS
+5V
+15V
-15V
STATUS LOGIC
SIGNAL MUTE
STATUS OPERATE CONTROL
A1
FIRST LOCAL OSCILLATOR AND MULTIPLIER 91D7288
60° CRYSTAL OVEN
51 MHz
BUFFER AMP.
X20
BPF
A5
1020 MHz 1ST LO OUT
METER FUNCTION SWITCH
MUTE LOGIC
MUTE IN
TFR IN
TFR OUT
RELAY CTL
SQUELCH RELAY OUT
COMP
MUX
TFR RELAY
MUTE AND TRANSFER 91C7271
A9
J20 MUX OUT 1.5 V P-P NOM.
J19 MUX OUT 1.5 V P-P NOM.
J18-10 GND
J18-9 MTR OUT
J18-8 MAN. MUTE IN
J18-7 IN
J18-6 OUT
XFR
J18-5 N/O
J18-4 N/C
SQUELCH
J18-3 ARM
J18-2 SPARE 2
J18-1 SPARE 1
J17 COMP 2 3.5 V P-P
J16 COMP 1 3.5 V P-P
POWER SUPPLY 91C7380
115 Vac. 60 Hz
LINE FILTER
XFMR
REGULATOR BOARD
A8
Moseley
950 MHz. Receiver
Block & Level Diagram
9201295
A

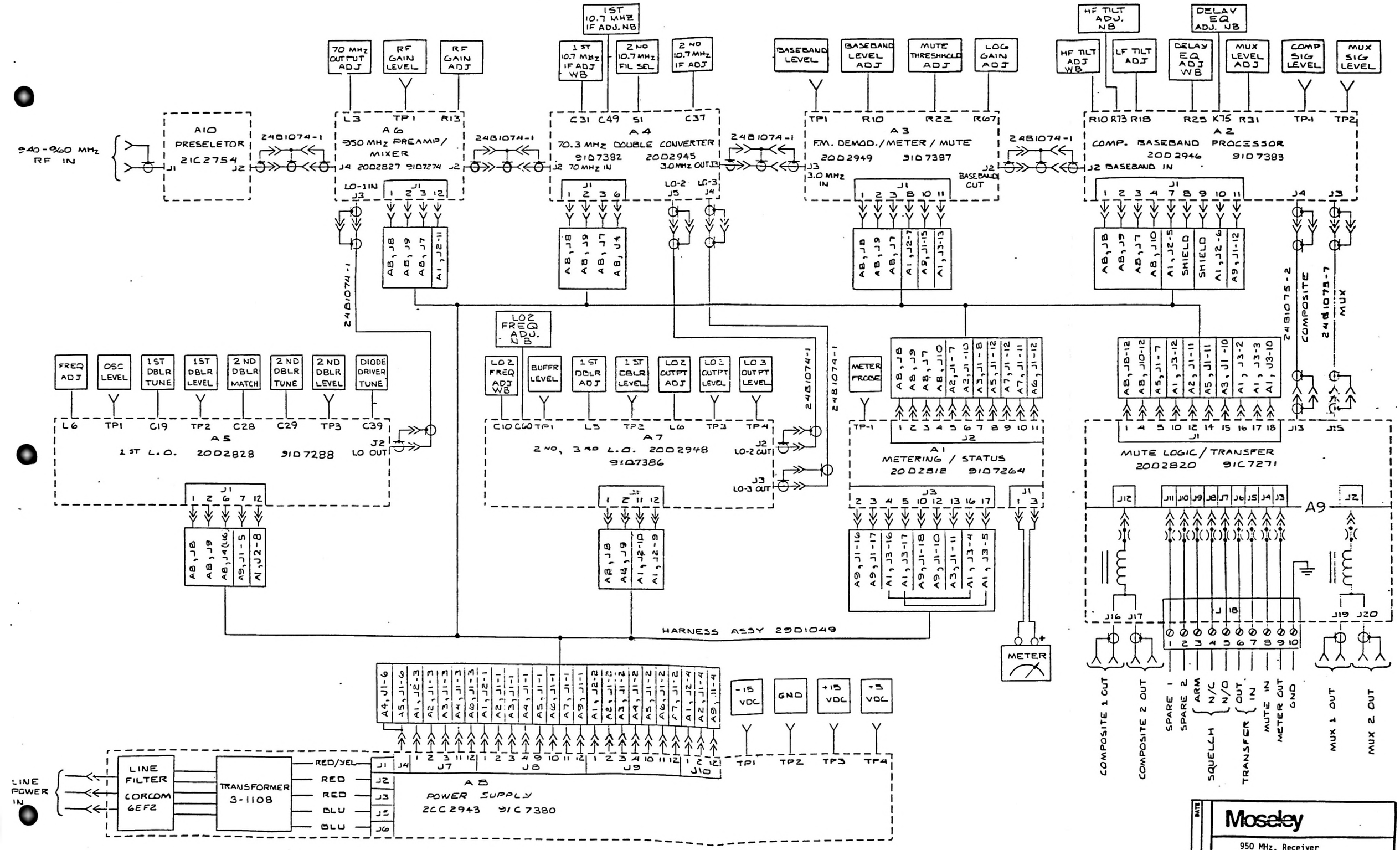
940-960 MHz RF IN
A10 PRESELETOR 21C2754
A6 950 MHz PREAMP/ MIXER
A4 70.3 MHz DOUBLE CONVERTER 91D7382 20D2945
A3 F.M. DEMOD./METER/MUTE 20D2949 91D7387
A2 COMP. BASEBAND PROCESSOR 20D2946 91D7383
A5 1ST L.O. 20D2828 91D7288
A7 2ND, 3RD L.O. 20D2948 91D7386
A1 METERING / STATUS 20D2818 91D7264
MUTE LOGIC/TRANSFER 20D2820 91C7271
A9
HARNESS ASSY 29D1049
A8 POWER SUPPLY 20C2943 91C7380
LINE POWER IN
LINE FILTER CORCOM 6EF2
TRANSFORMER 3-1108
-15 VDC
GND
+15 VDC
+5 VDC
METER
COMPOSITE 1 OUT
COMPOSITE 2 OUT
SPARE 1
SPARE 2
SQUELCH ARM N/C N/O
TRANSFER OUT IN
MUTE IN
METER OUT
GND
MUX 1 OUT
MUX 2 OUT
Moseley
950 MHz. Receiver System Schematic
91D7385
B

Views are shown overleaf

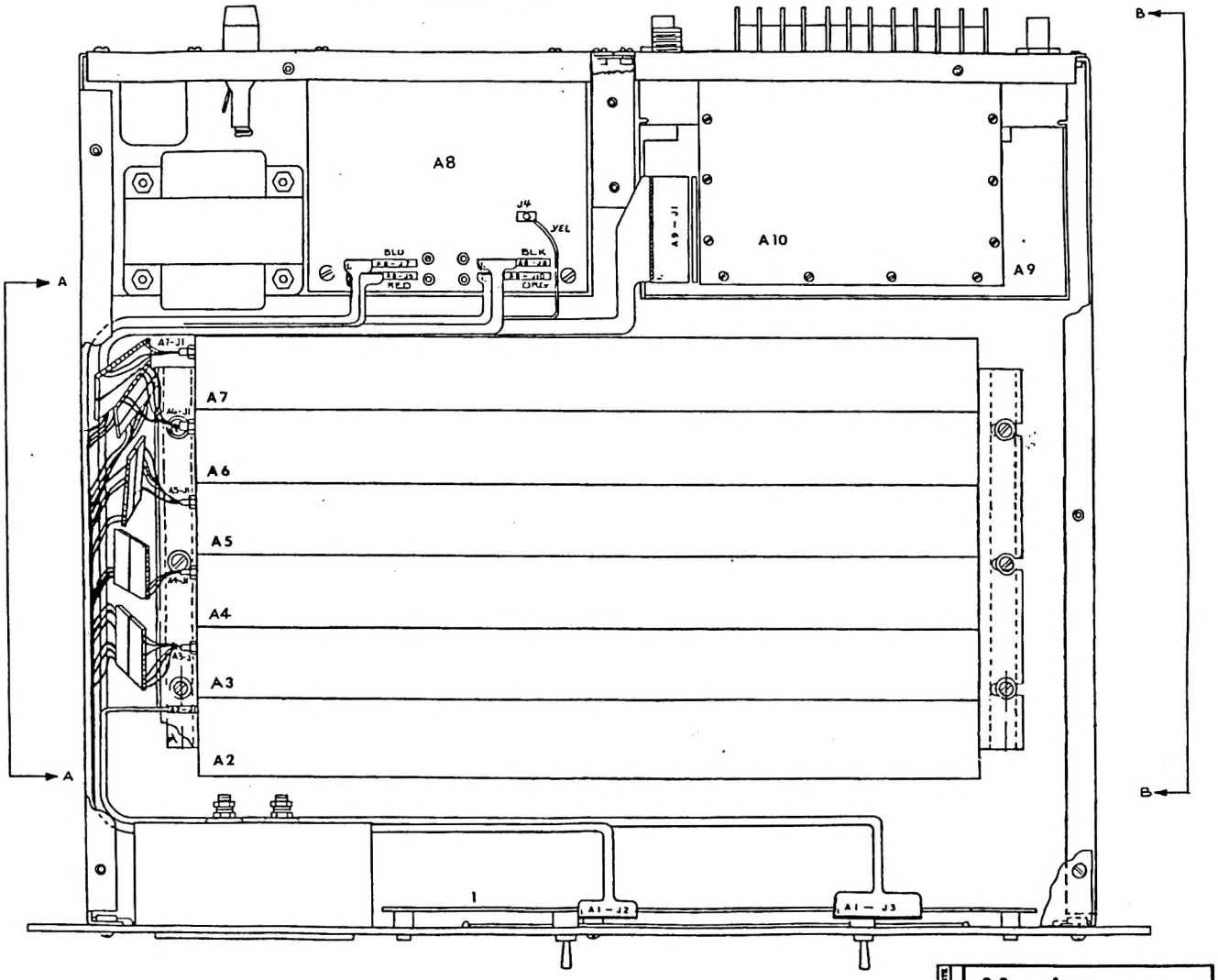

Moseley

RECEIVER ASSEMBLY
PCL - 606/C

21D2739 R

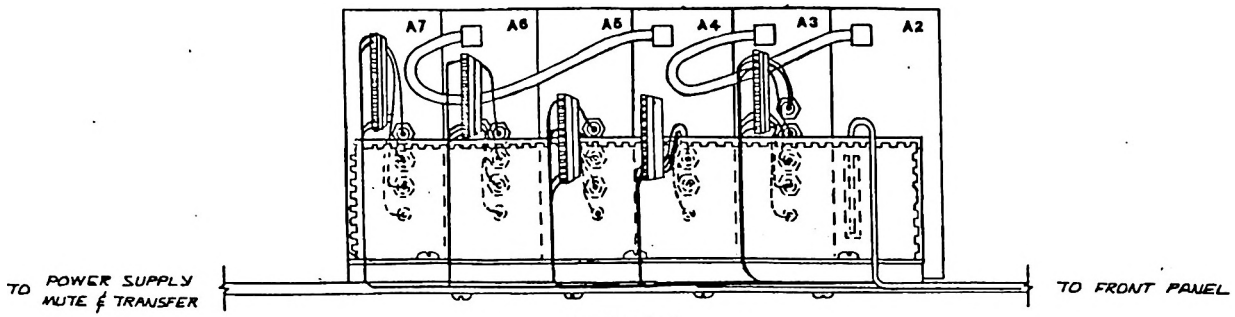

VIEW A-A

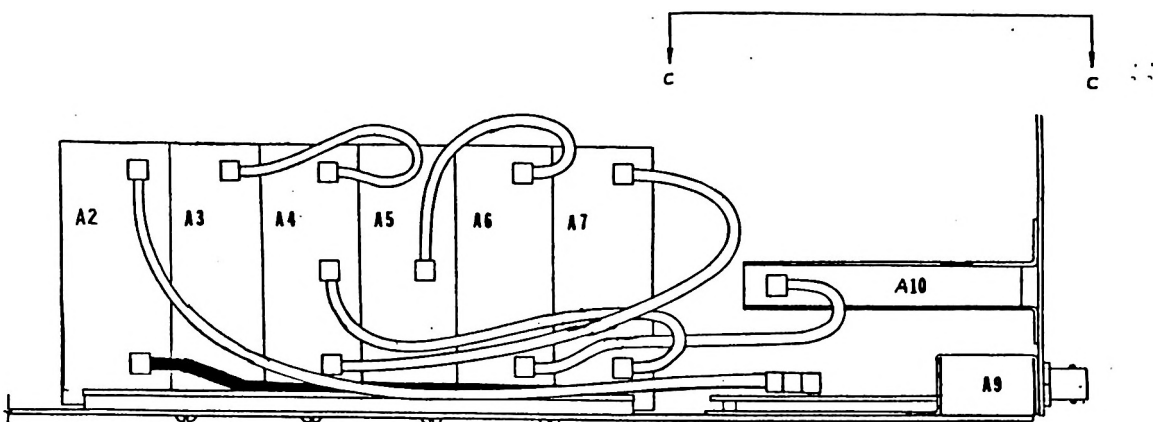

VIEW B-B

TOP VIEW

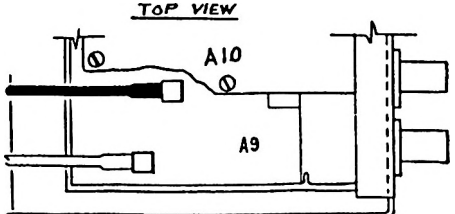

VIEW C-C
COMPOSITE

SECTION 3

MOSELEY ASSOCIATES, INC. GENERAL INFORMATION

3.0 CUSTOMER SERVICE INFORMATION

Moseley Associates, Inc. has a Technical Services Department to assist product users who experience difficulties. Our service is available at two levels: telephone consultation and factory service. Different circumstances apply whether the product(s) are under Warranty/Service Agreement or are outside Warranty/Service Agreement status.

Please read the manual; a large portion of telephone calls to Moseley request information which is needed due to nonfamiliarity with the equipment. The majority of those questions are already answered by the Installation/Operation sections of each manual. If these do not help your problem, the first step in any factory service transaction should always be telephone consultation.

Telephone Consultation

If telephone consultation/assistance is necessary, please have the following information available prior to calling the factory:

A. Model Number and Serial Number of unit,
B. Shipment date or date of purchase of an Extended Service Agreement
C. Suspected Module identification markings,
D. Be prepared to accurately describe the problems with the unit:Constant or intermittent? Precise symptoms? Meter readings? Operational frequency of unit?
E. Factory test data sheets, if applicable.

Once you are prepared with this information, contact our Technical Services Department for assistance. A Technical Services Representative who knows your product(s) is available during normal work hours (8:00 a.m. to 5:00 p.m., Pacific Time, Monday through Friday). Please have patience if the particular representative you should talk to is busy. Leave your name, call letters, equipment type and telephone number(s) where you can be reached in the next few hours. Someone will get back to you as soon as possible.

Please be prepared to keep telephone consultations as short as possible in order to free up the Technical Services Representative to help someone else in trouble. Usually the Technical Services Representative will make suggestions and recommendations for your next step. After trying these, you may call back if you continue to experience problems.

For telephone assistance call (805)968-9621.

After Hours Emergency (Only) Telephone Consultation

Emergency service is provided from 5:00 p.m. to 10:00 p.m., Pacific Time, Monday to Friday, and from 8:00 a.m. to 10:00 p.m., Pacific Time, on weekends and holidays. For telephone assistance call (805)968-9621.

This after hours service is for emergencies only. Please do not expect our representative to know the status of your order, to take parts orders or to be equipped to help with installation problems.

Factory Service

Arrangements for factory service can be made after consultation with the factory Technical Service Representative and his assignment to you of a Return Authorization (R.A.) Number. This number expedites your equipment's routing from the Receiving Department to Technical Services.

When returning your equipment to Moseley Associates, Inc., the following suggestions are offered to assist you. If you are returning a module, ensure that the module is packed sufficiently to withstand the rigors of the journey. Make sure that the shipping carton is packed evenly and fully, with packing material filling all voids so that the module cannot shift inside the shipping carton. The package should also be marked in red with the words "Electronic Equipment" or "Fragile". Remember, the condition of the module is totally dependent on the care taken in the packing. Reference the Return Authorization Number that you had previously obtained from the factory on the outside of the carton or on the shipping label. Make sure that the name of your company is listed on the shipping label, and insure your module appropriately.

If you are shipping a complete chassis, all modules should be tied down as they were originally received. On some Moseley Associates equipment, shipping screws are required on the underside or topside of the chassis.

Include any and all descriptions of the difficulties encountered with your equipment in the field. This will greatly assist us in processing your equipment and returning it as expeditiously as possible.

Use the original shipping carton in which your equipment was supplied, if possible. Ensure that the carton is packed evenly and fully with packing material filling any voids so that the chassis cannot shift inside the carton. Make sure the carton is sealed properly with either nylon-reinforced tape or shipping sealing tape. Mark the outside of the carton "Electronic Equipment - Fragile" in big, red letters. This will assist in the survival of the equipment in the shipping process. Again, bear in mind that the survival of the unit depends almost solely on the preparation taken in shipping it.

When returning your equipment to our factory, please address it to the following:

MOSELEY ASSOCIATES, INC.
Attn: Technical Services Dept.
111 Castilian Drive
Goleta, California 93117

Display your Return Authorization Number clearly on the shipping label, and insure the equipment for the appropriate amount.

All equipment must be shipped prepaid; Moseley Associates, Inc. will return the equipment prepaid under Warranty and Service Agreement conditions, and either freight collect or billed for equipment not covered by Warranty or a Service Agreement.

GENERAL

Replacement Modules

Moseley Associates encourages the purchase of recommended spare parts kits to allow the customer to be totally self-sufficient with regard to parts. We recognize that there are extenuating circumstances when troubleshooting to the

component level is neither practical nor possible. If this is the case, replacement module exchange may be the most expedient way of correcting the problem. Each product manual lists recommended spares.

Non-frequency sensitive replacement modules are normally available for immediate shipment. If you require a replacement module from Moseley Associates, please give your shipping address to our Technical Services Engineer. If the module or equipment to be supplied to your company is to be held at the airport with a telephone number to call, please provide at least two telephone numbers. This will often expedite the delivery or pickup of the replacement module or equipment.

Field Repair

Always try to isolate the problem to a specific area or module, if possible. By comparing the actual wave shapes and levels with those referenced on the block and level diagrams or schematics, the problem can often be localized to the component level.

If an integrated circuit is suspect, carefully remove the original and plug in the new one in the same direction. These devices are installed one way only. Plugging in a new device backward may damage the newly installed component or the surrounding circuitry. If a suspect device operates intermittently or appears to drift, Freeze Mist may aid in diagnosing the problem.

If a soldered component has to be removed from a printed circuit board, do the following:

> Use a 40 W soldering iron with a 1/8 inch tip. Do not use a soldering gun. Excessive heat may cause damage!
>
> Remove all the solder contacting the lead or leads from the component and from the associated printed circuit pad. To assist in the removal of the solder, solder-sipping braid, such as solder wick, is very useful. Once the solder has been removed, remove the component from the board.

When installing the new component, pre-bend the leads of the replacement component so that they will easily fit into the appropriate PC board holes. Solder each lead of the component to the bottom side of the board with a 40 W

soldering iron with a 1/8 inch tip. Always use a good brand of rosin-core solder. The solder joint should be smooth and shiny. Also, be sure that excessive heat is not used in this soldering operation. Excessive heat will damage the printed circuit pad that comes in contact with the new component. Finally, cut each lead of the replacement component close to the solder on the pad side of the printed circuit board with a pair of diagonal cutters. Then remove all residual flux with either flux cleaner or a cotton swab moistened with flux cleaner.

SECTION 4

INSTALLATION

4.1 UNPACKING

The PCL-606/C Transmitter and Receiver should be carefully unpacked and inspected for shipping damage. Should inspection reveal any shipping damage, visible or hidden, immediately file a claim with the carrier. Keep all packing materials until the performance of the system is confirmed.

We recommend that the top covers of both the Transmitter and Receiver be removed for a superficial inspection of the internal components. This should ascertain that all modules, assemblies, and cables are mechanically secure.

Four screws are used to hold the FMO Synthesizer module in place during shipment. They should be removed from the top of the transmitter cover before installation. Retain these shipping screws and reinstall them if the Transmitter is to be moved. This will prevent damage to the modules inside.

CAUTION

Do not attempt any adjustments of any kind until the nature of each adjustment is understood.

Do not apply power to the Receiver until the procedure in Section 4.2 is completed.

Do not apply power to the Transmitter until the procedure in Section 4.2 is completed and a proper load is connected to the RF output.

Do not remove the covers on the transmitter RF Amplifier module.

Do not attempt disassembly or inspection of the Receiver Preselector Filter module.

Replace the top covers. All adjustments normally used during installation and operation are accessible through the top covers.

4.2 LINE VOLTAGE SELECTION

The Transmitter and Receiver each have the capability of operating at one or four nominal ac power source voltages: 100, 120, 220, or 240 Vac, 50-60 Hz. The units are shipped for 120 Vac operation, unless otherwise specified.

Select the operating voltage by rewiring the transformer primary windings as shown in the appropriate schematic and assembly drawings in Section 5.

If the operating voltage is changed, change the fuse in accordance with the following:

Line Voltage	Transmitter Fuse (A)	Receiver Fuse (A)
100	2	1
120	2	1
220	1	0.5
240	1	0.5

4.3 WIDEBAND, NARROWBAND MODE SELECTION

The PCL-606/C is capable of operating on either 500 or 300 kHz channel spacings. The wider spacings offer higher signal to noise ratios and lower distortion. However, if spectral crowding and interference become a problem, then changing over to narrowband operation will alleviate most of these problems. The changeover is accomplished by moving a series of internal jumpers from the wideband (WB) position to the narrowband (NB) position. Dual factory pre-aligned signal processing paths exist at each jumper point to eliminate the requirement to realign the system to meet specifications. NOTE: The use of a 185 kHz subcarrier in the narrowband mode is not recommended if it causes interference with a user on an adjacent channel.

The following table outlines the affected modules and jumper locations to change the mode of operation. NOTE: Move only the indicated jumpers.

Transmitter Module	Schematic	Module Loc.	Jumpers	Function
FMO/Synth	91D7389	A4	E1	Deviation Select
Receiver Modules	-	-	-	-
2nd/3rd LO	91D7386	A7	E1	Frequency Select
Double Converter	91D7382	A4	E2 & E3	Bandwidth Select
FM Demod	91D7387	A3	E1	Gain Select
Baseband Processor	91D7383	A2	E1 E2 E3	HF Tilt Delay Eq. MUX BW

4.4 PREINSTALLATION CHECKOUT

While the user has both the Transmitter and Receiver at the same location, we suggest that a preinstallation checkout of the system be performed before mounting the equipment in racks separated by many miles.

The minimum equipment to perform a bench test setup are:

1. An RF wattmeter with a measurement range of 5 to 12 watts (Bird 43 or equivalent).

2. A 50 Ohm, 10 watt dummy load for 950 MHz with 30 dB attenuation output capability (Sierra 661A-30 or equivalent).

3. A low-distortion audio signal generator (Tektronix SG505 or equivalent).

4. An audio distortion analyzer (Tektronix AA501 or equivalent).

5. Variable attenuator, 0 to 100 dB at 950 MHz (Kay Model 432D or equivalent).

More extensive testing can be accomplished using a stereo generator and demodulator combination and/or a subcarrier generator and demodulator combination.

Observe these precautions when performing any bench test:

Observe these precautions when performing any bench test:

CAUTION

ALWAYS OPERATE THE TRANSMITTER TERMINATED INTO A PROPER 50-OHM LOAD.

ALWAYS ATTENUATE THE SIGNAL INTO THE RECEIVER TO LESS THAN 3000 MICROVOLTS (Approximately 75 dB attenuation between the Transmitter and Receiver).

Failure to observe these precautions can cause the transmitter final transistor to be destroyed, or the receiver preamplifier transistors may be damaged.

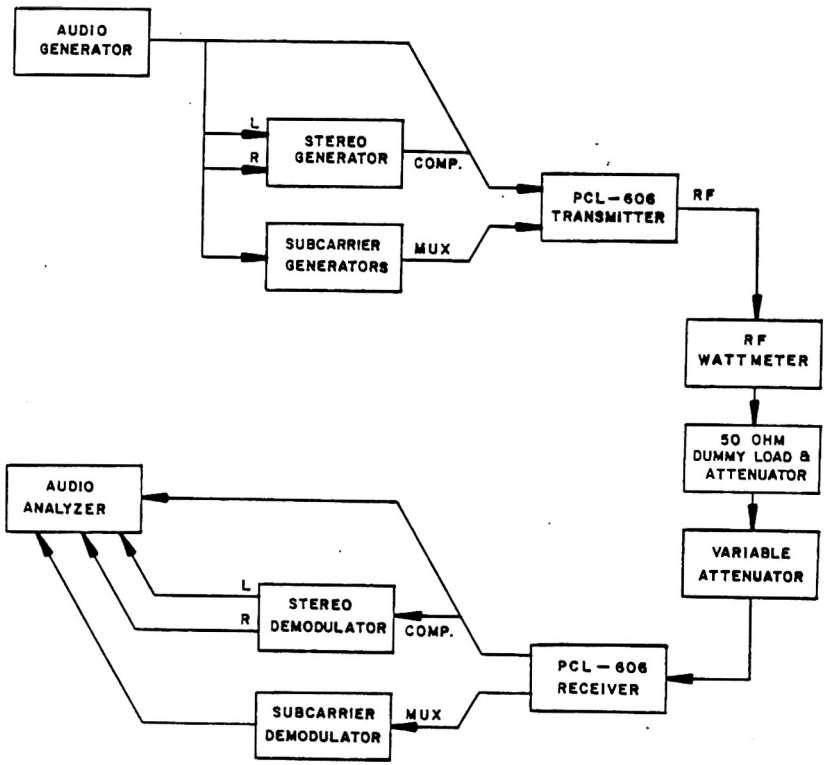

Figure 4-1. Typical bench test setup

Figure 4-1 shows one of several possible bench test setups.

With the wattmeter and dummy load installed, apply ac power to the Receiver. The three power indicator LEDs on the front panel will be green, indicating that the internal power supplies are operational. The OPERATE and SIGNAL LEDs will be red, indicating that there is no RF.

Apply ac power to the Transmitter and place the RADIATE/ STANDBY switch in the RADIATE position. The four power status LEDs will be green. The AFC LOCK and RADIATE LEDs will be red for several seconds and then turn green. Observe that the wattmeter will indicate between 5 to 8 watts and that the transmitter meter will provide readings of FWD POWER and REFL POWER. A brief period after the RADIATE LED becomes green, the OPERATE and SIGNAL LEDs on the Receiver will change from red to green. The RF LEVEL meter position on the Receiver may be selected to determine the strength of the RF signal applied to the receiver. Adjust the variable attenuator until an input signal strength of approximately 1000 microvolts is indicated. It should be mentioned that in any bench testing where the Transmitter and Receiver are in close proximity, there can be sufficient RF leakage from the cables to render computations of applied signal strength impractical based upon power and attenuation data.

Apply a 3.5 volt peak-to-peak signal (1.237 volts RMS) from the audio signal generator at 400 Hz to the composite input of the Transmitter. The PGM LEVEL at the transmitter and receiver meters may be selected and should indicate 0 on the dB scale. The output voltage from a composite output of the Receiver can be fed to an audio analyzer. The output voltage should be approximately 3.5 volts peak-to-peak (1.237 volts RMS). The audio input signal may be removed and the broadband signal-to-noise ratio (SNR) determined:

$$\text{SNR} = 20 \log_{10} \frac{\text{(RMS voltage with modulation)}}{\text{(RMS voltage without modulation)}}$$

Note: Demodulated stereo SNR will be approximately 12 dB greater than broadband SNR.

While this concludes the basic bench test of the units, the user may want to run further experiments to become familiar with the system. Sections 2, 5 and 6 should be consulted for a thorough understanding of the STL system before proceeding with any higher level testing. It must be noted that any testing for stereo performance must be accomplished with a very high quality stereo generator and stereo demodulator combination. The stereo generator and demodulator combination should be tested back to back to determine their performance independently of the STL link.

Receiver Selectivity Selection

Unless otherwise instructed, when the receiver is shipped from the factory, it is normally set in the wide IF mode. If you desire to operate the unit in the narrow IF mode, the alignment procedures in Section 4.3 should be consulted.

4.5 RACK INSTALLATION

The PCL-606 units are designed for mounting in standard rack cabinets, preferably between waist and shoulder height. The Transmitter and Receiver have mounting holes for Chassis Trak C-300-5-1-14 chassis rack slides. If the rack will accept chassis rack slides, their use is recommended. If chassis rack slides are used, be sure to leave at least a 15-inch service loop in all cables to the equipment.

When mounting the Transmitter or Receiver in a rack, the unit must have an unobstructed free flow of air for cooling purposes across the rear cooling fins. Continued operation in a confined environment can cause the ambient temperature to exceed specification, resulting in reduced life or catastrophic failure.

When two PCL-606 Receivers are in a system at a site, it is recommended that they be mounted adjacent to each other in the rack. This will facilitate automatic switchover interconnect. When a PCL-606 Receiver is used with a PCL-505 or PCL-303 Receiver, a transfer panel (such as a TPR-2) must be used to accomplish automatic switchover, and should be mounted between the two receivers. Receiver automatic switchover interconnections are detailed in Section 4.10.2.

When two Transmitters are in a system at a site, an automatic transfer panel such as the TPT-2 should be mounted between them. The TPT-2 will allow interconnection of a PCL-606 with another PCL-606, PCL-505, or PCL-303 Transmitter and can provide automatic switchover in the event of a detectable failure in the Transmitter, as shown in Section 4.10.1.

4.6 ANTENNA INSTALLATION

The installation of the antennas and associated feed lines determines to a large extent the long-term reliable operation of the STL. Experience has indicated that a reasonably clear path having an 0.6 Fresnel zone clearance along with good feed-line installation results in a highly predictable signal level at the receiver. The appendix con-

tains a series of instructions, calculation sheets, typical gain and loss characteristics, and nomographs to enable the received signal level to be predicted. Since the PCL-606 has a signal strength meter, it is possible to determine the quality of the antenna installation and path compared to the calculations.

Experience at 960 MHz has indicated that for reliable year-round operation with a predominately overland path and 0.6 Fresnel zone clearance, a 20 dB fade margin should be used. At least a 25 dB fade margin should be allowed if the path is over water or flat terrain with little vegetation.

4.7 TRANSMISSION CABLES

The transmission cable between antenna and Transmitter or Receiver should be coaxial cable whose loss characteristics are known. Typical quality low-loss foam dielectric lines such as Andrew LDF4-50, a 0.5 inch diameter cable, has a 2.4 dB loss per 100 feet at 950 MHz. This cable will generally be adequate where the total cable run (at both Transmitter and Receiver) is less than 300 feet and there is a good transmission path of less than 10 miles.

When the total transmission cable length exceeds 300 feet, an obstructed or grazing path occurs or the path length exceeds 10 miles, a lower loss cable such as Andrew LDF5-50, a 7/8 inch diameter cable with a loss of 1.4 dB per 100 feet, is recommended.

To reduce system losses, it is important to select type N connectors that are designed for the type of transmission cable used in the system. The connectors must then be installed in accordance with the manufacturer's recommendations. It sometimes will take only one improperly installed connector to reduce the received signal strength sufficiently to provide only marginal system performance.

Reasonable care should be exercised during the installation of the transmission cable. Never put a sharper bend radius in the cable than recommended by the manufacturer. Too sharp a bend can cause internal cable damage that is not observable on the outside of the cable. This damage can result in excessive loss in the cable. Since the higher quality transmission cables are relatively inflexible, Moseley Associates has available several short "pigtail" assemblies. These "pigtails" are designed to attach to the ends of the transmission cable and allow movement of the equipment or antenna with less chance of damaging the transmission cable itself. These "pigtails" and appropriate con-

nectors are available in installation kits for the more popular types of transmission cable.

Figure 4-2 shows typical transmitter RF connections for the transmission cable to the antenna, and Figure 4-3 shows typical receiver RF connections.

Should it be desired to mount the antenna on a series-fed standard broadcast tower, the required isolation can be obtained with the installation of a Moseley Associates' Isocoupler at the base of the series-fed antenna. Isolation at standard broadcast frequencies is high, and the isocoupler introduces only approximately 1.5 dB loss at the STL frequency.

4.8 PROGRAM AND MULTIPLEX INSTALLATION - TRANSMITTER

Figure 4-4 depicts the typical interconnection of a PCL-606/C as would normally be found at the studio. The Left and Right program material is first passed through an automatic gain control (AGC) such as the Moseley TGR-340 to first establish the nominal system levels. This is followed by a frequency-conscious audio limiter, such as the Moseley TFL-280, to prevent overmodulation of the system as the result of the normal preemphasis curve used in FM broadcasts.

It is highly desirable that the gain control or limiting units for each channel be interconnected so that any processing that occurs on one channel is performed in the same manner on the other channel. Both TGR-340 and TFL-280 units, installed in pairs, can be interconnected to process both channels in the same manner. The channel requiring the most processing controls both units.

The limiter outputs are then fed to a stereo generator such as the Moseley SCG-9A for conversion of the left and right channels into the standard FM composite baseband signal. The composite signal in then fed into the composite input of the PCL-606/C. The standard composite signal is unbalanced, 3.5 volts peak-to-peak, for 100 percent modulation. BNC connectors with type RG-58 A/U coaxial cable are generally used for the interconnection.

CAUTION

> Never overmodulate the STL transmitter, as this will cause increased distortion in the received signal and, possibly, interference to other users in the STL band.

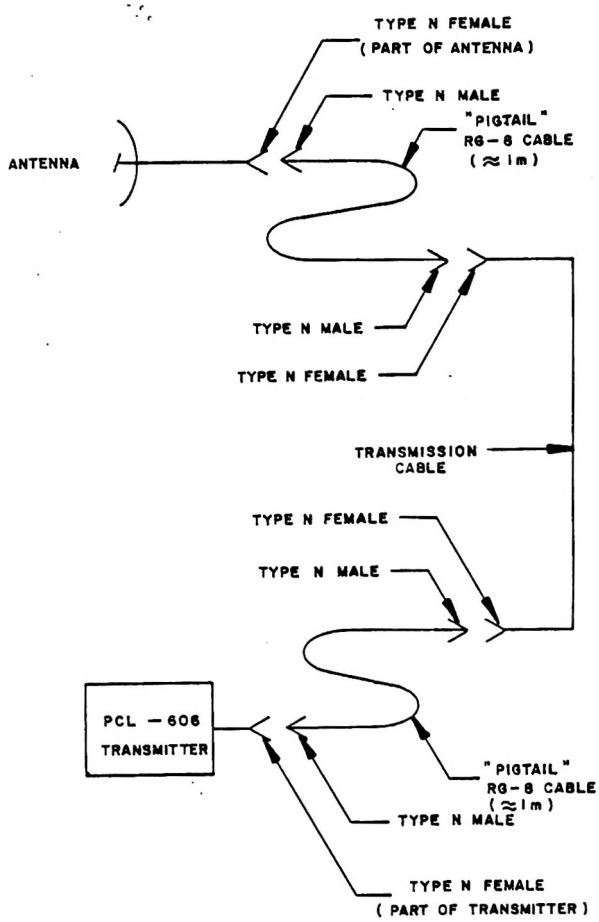

Figure 4-2
Typical PCL-606/C Transmitter
RF Connects

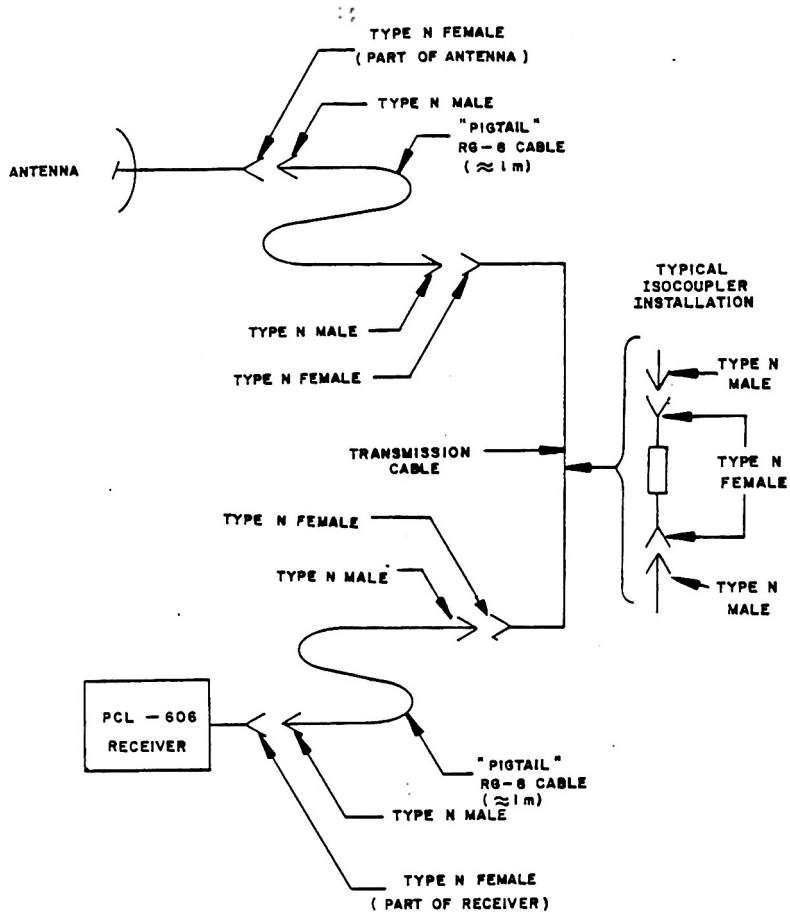

Figure 4-3
Typical PCL-606/C Receiver RF Connects

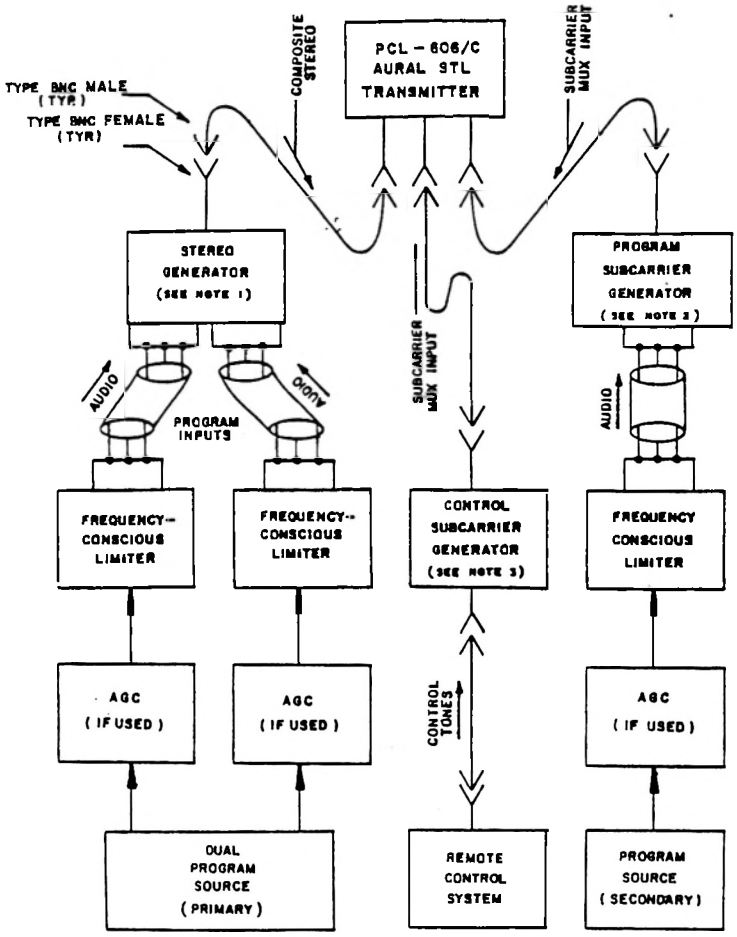

NOTES:

1. Stereo Generator may be Model SCG-9 or equivalent.
2. Program Subcarrier Generator may be Model SCG-8 or equivalent.
3. Control Subcarrier Generator may be part of Remote Control System.
4. Coaxial cable is RG-58 A/U or equivalent.

Figure 4-4

Transmitter Pgm and MUX Interconnect

The secondary program audio is generally passed through an AGC stage and/or a frequency conscious limiter into a subcarrier generator, such as the Moseley SCG-8, with a center frequency of 185 kHz. The subcarrier for the secondary program audio is fed to the PCL-606 MUX-2 subcarrier input with an unbalanced shielded cable (RG-58 A/U typical) with BNC connectors. An input level of 1.5 V p-p corresponds to a main carrier deviation of 7.5 kHz (5.25 kHz in the narrowband mode) by the MUX-2 subcarrier. CAUTION: In the narrowband mode the use of a 185 kHz subcarrier is not recommended if it causes interference with a user on an adjacent channel.

Where a control subcarrier is desired, a subcarrier frequency of 110 kHz is typically used. The modulated subcarrier may be generated internally in the remote control equipment as in the case of the Moseley MRC series. In any case, the control subcarrier is applied to the MUX-1 input on the PCL-606 Transmitter with a peak-to-peak signal of 1.5 volts using BNC connectors on coaxial cable (RG-58 A/U typical). This signal will produce a main carrier deviation of 5 kHz (3.5 kHz in the narrowband mode) by the MUX-1 subcarrier.

All inputs (composite and multiplex) into the PCL-606 Transmitter are wideband inputs. It is assumed that the equipment supplying signals to be fed into the Transmitter contain the band limiting filters necessary to limit the signals to the spectrum for the intended use, i.e., 53 kHz for stereo composite, 110 kHz for control subcarrier, and 185 kHz for secondary program audio.

If the external equipment generates any spurious signals, these signals will be accepted by the Transmitter and passed to the Receiver. Any spurious signals may cause interference among the composite and subcarrier information, and may increase the occupied bandwidth to the extent that interference will be experienced by neighboring users in the STL Band.

4.9 PROGRAM AND MULTIPLEX INTERCONNECT - RECEIVER

At the outputs of the PCL-606/C Receiver, the audio-band output of the FM demodulator is split and filtered into two bands. The composite outputs are from 30 Hz to approximately 85 kHz. The multiplex outputs are bandpass filtered to pass the frequency range of 85 kHz to 220 kHz. But see notes on 110 kHz filter version on page 2-8.

Figure 4-5 depicts a typical interconnection of a PCL-606/C Receiver at the remote transmitter site. The unbalanced composite output, 3.5 volts peak-to-peak, is interconnected to the wideband input of the Transmitter with coaxial cable (RG-58 A/U typical) with BNC connectors.

The secondary program audio (on the STL 185 kHz subcarrier) is demodulated by a unit such as the Moseley SCD-8. The baseband audio is passed to a subcarrier generator at 67 kHz, the normal SCA program carrier, which in turn is fed to the main transmitter multiplex input. The multiplex outputs may also be fed to the control subcarrier demodulator for use by the control system. Some control systems such as the Moseley MRC series have their own internal subcarrier demodulation capability, and an external demodulator is not required. Note that since both multiplex outputs contain the same 85 to 200 kHz spectrum, the subcarrier demodulators are required to further filter the spectrum as required for their individual purposes.

4.10 MAIN/STANDBY INTERCONNECT

The PCL-606 Transmitter and Receiver can be interfaced with other PCL-606, PCL-505 or PCL-303 systems to form a redundant backup system that provides for automatic changeover between equipment in the event a detectable failure occurs. The Moseley model TPT-2 (Transfer Panel Transmitter) is used to accomplish automatic switchover for transmitters in all combinations. The model TPR-2 (Transfer Panel Receiver) is required on all but PCL-606 to PCL-606 receiver combinations.

4.10.1 Transmitter Interconnect

When two transmitters are interconnected with a TPT-2 to form a main/standby pair, the composite and subcarrier generator output is routed to each transmitter in parallel. The RF output of each transmitter is routed to the respective RF input on the TPT-2. The transmission cable to the antenna is connected to the antenna type N connector of the TPT-2. Figure 4-6 details the interconnection of these signals. Important: For proper operation with a TPT-2, both transmitter RADIATE/ STANDBY switches should be in the STANDBY position. In addition, the interlock control between the transmitters and the TPT-2 should be wired as follows:

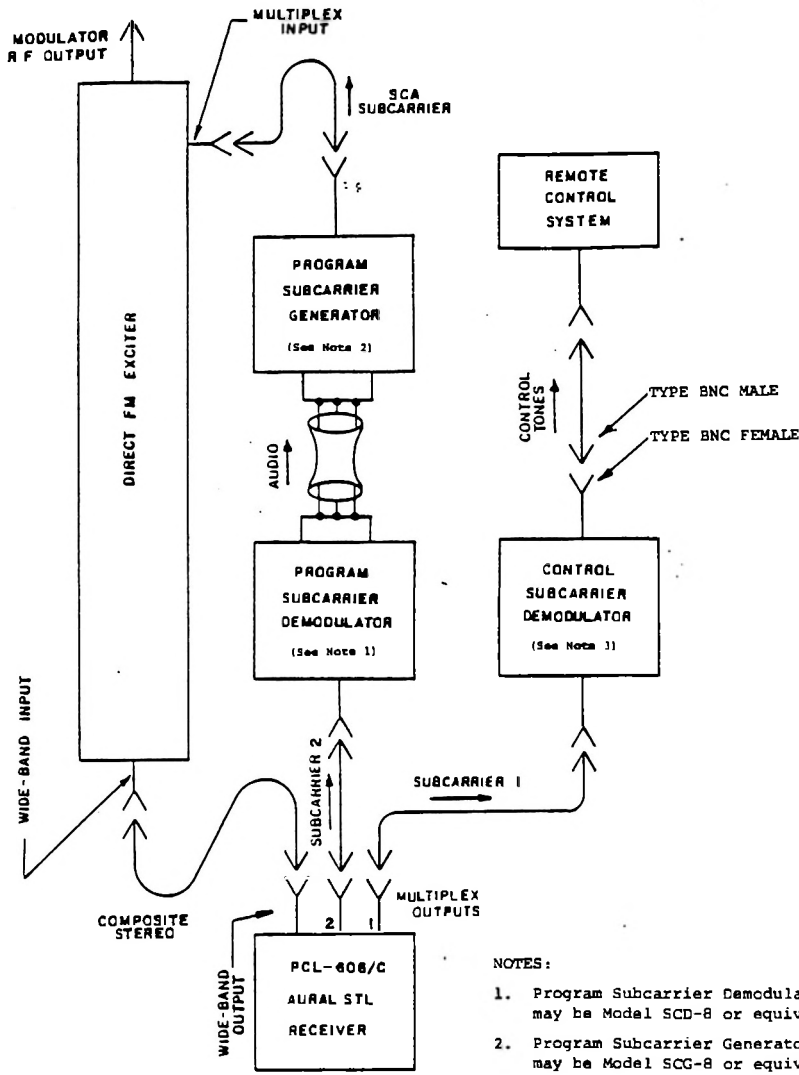

NOTES:

1. Program Subcarrier Demodulator may be Model SCD-8 or equivalent.
2. Program Subcarrier Generator may be Model SCG-8 or equivalent.
3. Control Subcarrier Demodulator may be part of Remote Control System.
4. Coaxial cable is RG-58 A/U or equal.

Figure 4-5
Receiver PGM and MUX Interconnect

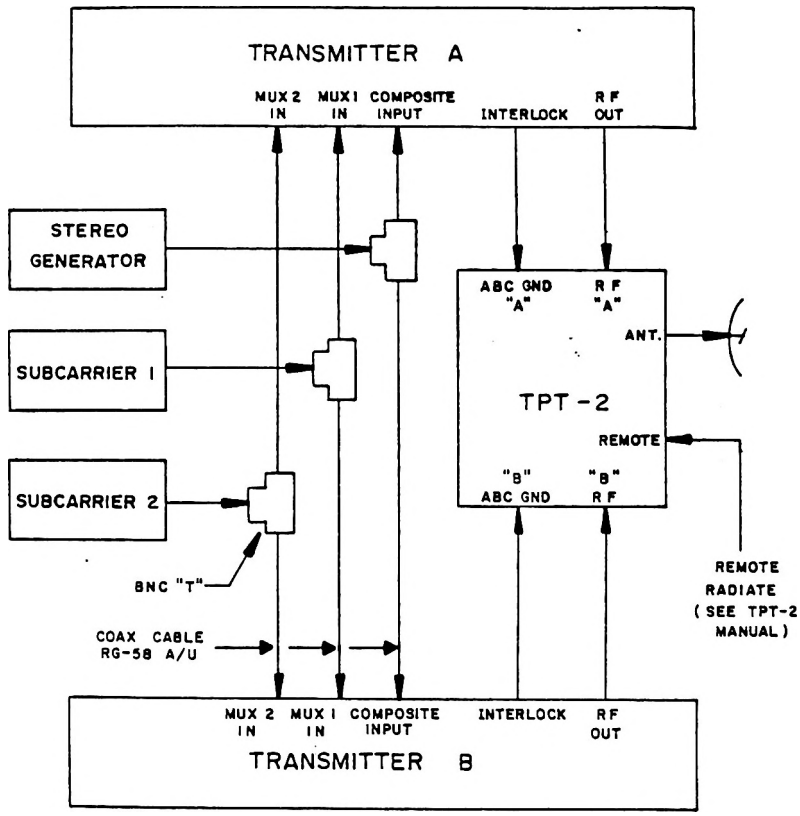

Figure 4-6
Main/Standby Transmitter Interconnect

Interlock Control

TPT-2 Terminal	PCL-606	PCL-505	PCL-303
A	A10-J1-B	J1-B	J403-F
B	A10-J1-D	J1-D	J403-C
C	A10-J1-C	J1-C	J403-D
GND	A10-J1-A	J1-A	J403-A

4.10.2 Receiver Interconnect, PCL-606/C, PCL-606

A pair of PCL-606 Receivers used in a main/standby configuration can be interconnected to perform automatic switchover if a detectable failure occurs in the on-line Receivers. As shown in Figure 4-7, the antenna is routed to each Receiver through a power divider such as the Moseley model PD-1000. The use of a power divider is recommended so the impedance as seen by each Receiver is approximately 50 ohms.

The composite and multiplex outputs are paralleled using a BNC "T" connector. This is permissible since the composite and multiplex outputs are switched internal to the Receiver. Only one of the Receivers at a time will have any output. The interlock control is achieved by first interconnecting the ground (GND) on the two Receivers. Then XFR IN of each Receiver is wired to XFR OUT of the other Receiver. GND, XFR IN, and XFR OUT are located on the barrier strip on the rear of the Receivers.

4.10.3 Receiver Interconnect, PCL-606/Other

The PCL-606 Receiver may be used with other Moseley STL receivers such as the PCL-505 and PCL-303 in a main/standby configuration provided that a TPR-2 (Transfer Panel Receiver) is used to perform the switching between the two receivers. A typical installation is detailed in Fig. 4-8. Note that only one multiplex output can be used from the receivers; however, there are two parallel multiplex outputs on the TPR-2 to provide the control and secondary audio multiplex outputs.

4.11 REMOTE CONTROL OF THE STL TRANSMITTER

The PCL-606 transmitter has been designed to be operated by remote control. Radiate/standby control capability, as well as metering outputs for power and AFC, are built in.

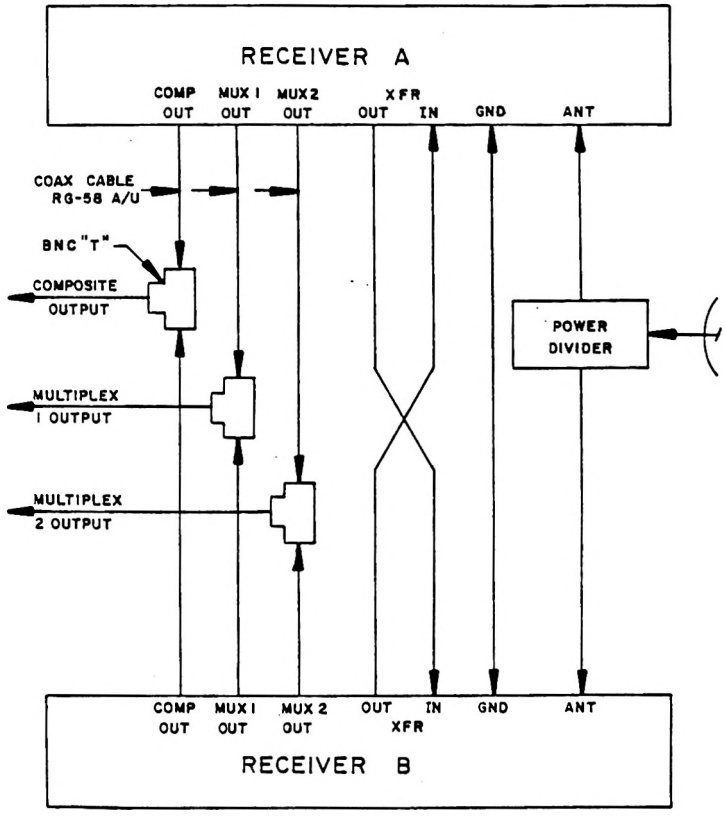

Figure 4-7
M/S Receiver Interconnect PCL-606-606

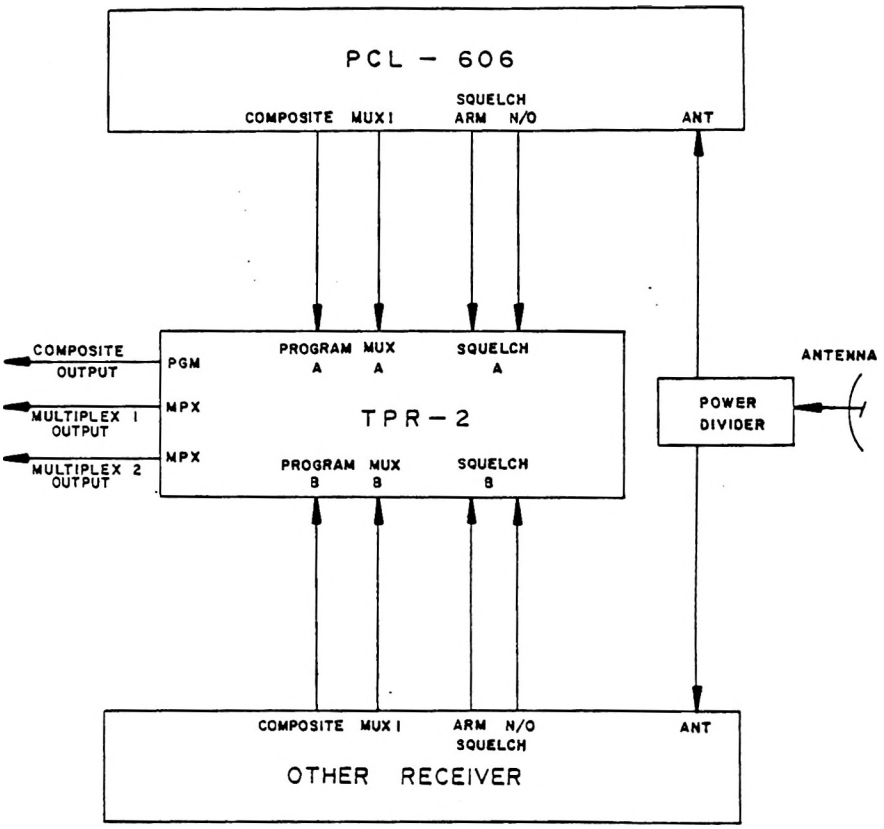

Figure 4-8
M/S Receiver Interconnect 606/Other

Figure 4-9 shows the interconnections required for remote control of the transmitter. All connections to the transmitter are made via A10-J1 on the rear of the unit. The interconnecting cable should have not more than a few hundred ohms resistance per conductor. The panel itself is shown schematically; this entire assembly is available from Moseley Associates as the Model ECP-5 Extension Control Panel.

The RADIATE/STANDBY switch will place the transmitter in a radiating condition when closed. It is electrically interconnected with the control switch on the transmitter itself, which should be placed in STANDBY for remote control operation. The AFC and Output meters give relative indications of these two parameters. The two calibration potentiometers are set to give a suitable meter deflection, as for example, half-scale.

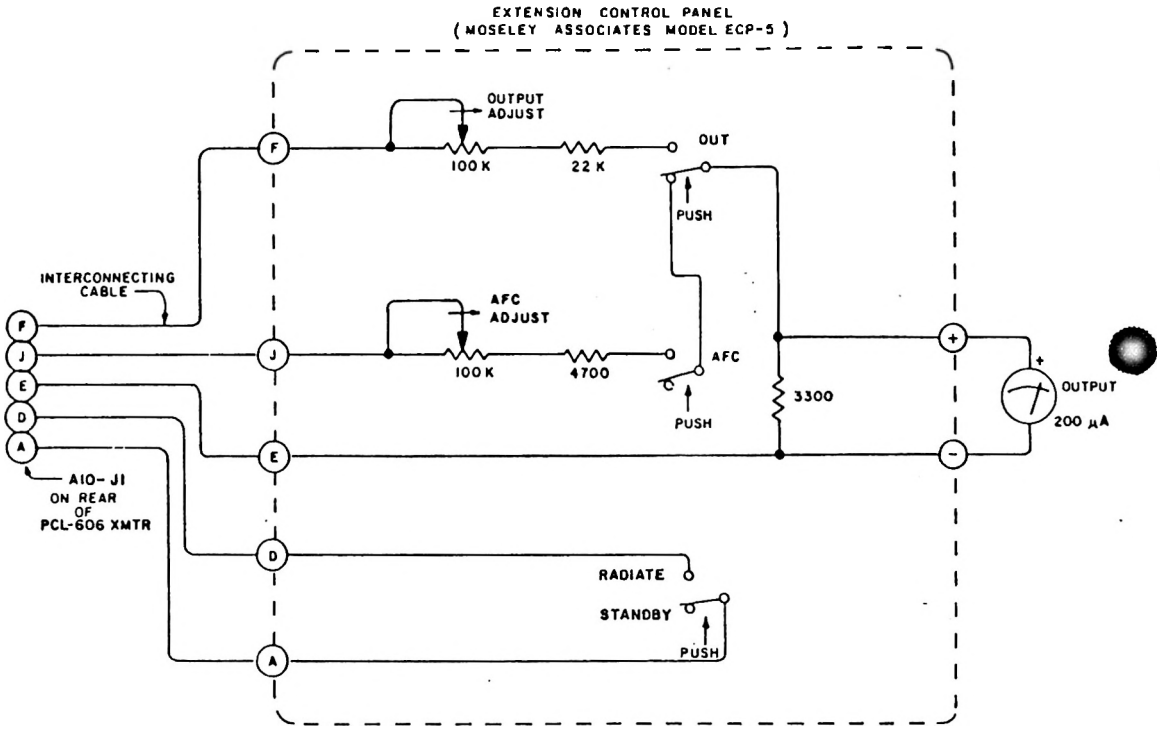

Figure 4-9
Ext. Control Panel Connector

SECTION 5

MODULE CHARACTERISTICS

5.1 INTRODUCTION

This section provides theory of operation, schematics, and parts lists for the PCL-606/C modules.

5.2 MODULE DESCRIPTIONS

The modules are discussed in the following order:

TRANSMITTER

- Composite Audio Processor
- FMO Synthesizer
- Up Converter
- First Local Oscillator
- RF Amplifier
- Metering and Status
- Transmitter Control
- Power Supply

RECEIVER

- Preselector Filter
- Preamplifier and First Mixer
- First Local Oscillator
- Double Converter
- Second and Third Local Oscillator
- FM Demodulator
- Composite Baseband Processor
- Metering and Status
- Mute and Transfer
- Power Supply

COMPOSITE AUDIO PROCESSOR

Schematic 91D7282
Parts List 20D2831

The Composite Audio Processor module sets the proper amplitude relationship between the three input signals: composite, MUX 1 and MUX 2. The composite signal is amplified by U4 and the MUX signals by U3. These signals are then linearly combined by U2 into one composite signal, which is sent to the FMO to frequency modulate the transmitter carrier.

With a 3.5 V p-p composite signal at J3, PROGRAM LEVEL control R31 is used to set the output level at J2 (baseband out) to 3.5 V p-p. This corresponds to 50 kHz (35 kHz in narrowband mode) deviation of the carrier frequency. With a 1.5 V p-p 110 kHz subcarrier input at J4, MUX 1 LEVEL control R28 is used to set the output level at J2 to 0.35 V p-p, which represents 5 kHz (3.5 kHz in narrowband mode) carrier deviation by this subcarrier. With a 1.5 V p-p 185 kHz subcarrier level at J5, MUX 2 LEVEL control R24 is used to set the output level at J2 to 0.525 V p-p, which equals 7.5 kHz (5.25 kHz in narrowband mode) carrier deviation by this subcarrier. All level adjustment controls possess enough range to accommodate a +/-4 dB range in input levels from the nominal levels previously defined.

A signal phase select switch is incorporated to ensure a noninverted system baseband phase relationship (input of transmitter to output of receiver). For 950 MHz band operation, this switch should be in position "B." Output samples from this module are also sent to the front panel Metering and Status module for indication of modulation levels. J1-12 carries composite meter information and J1-9 transmits MUX meter levels.

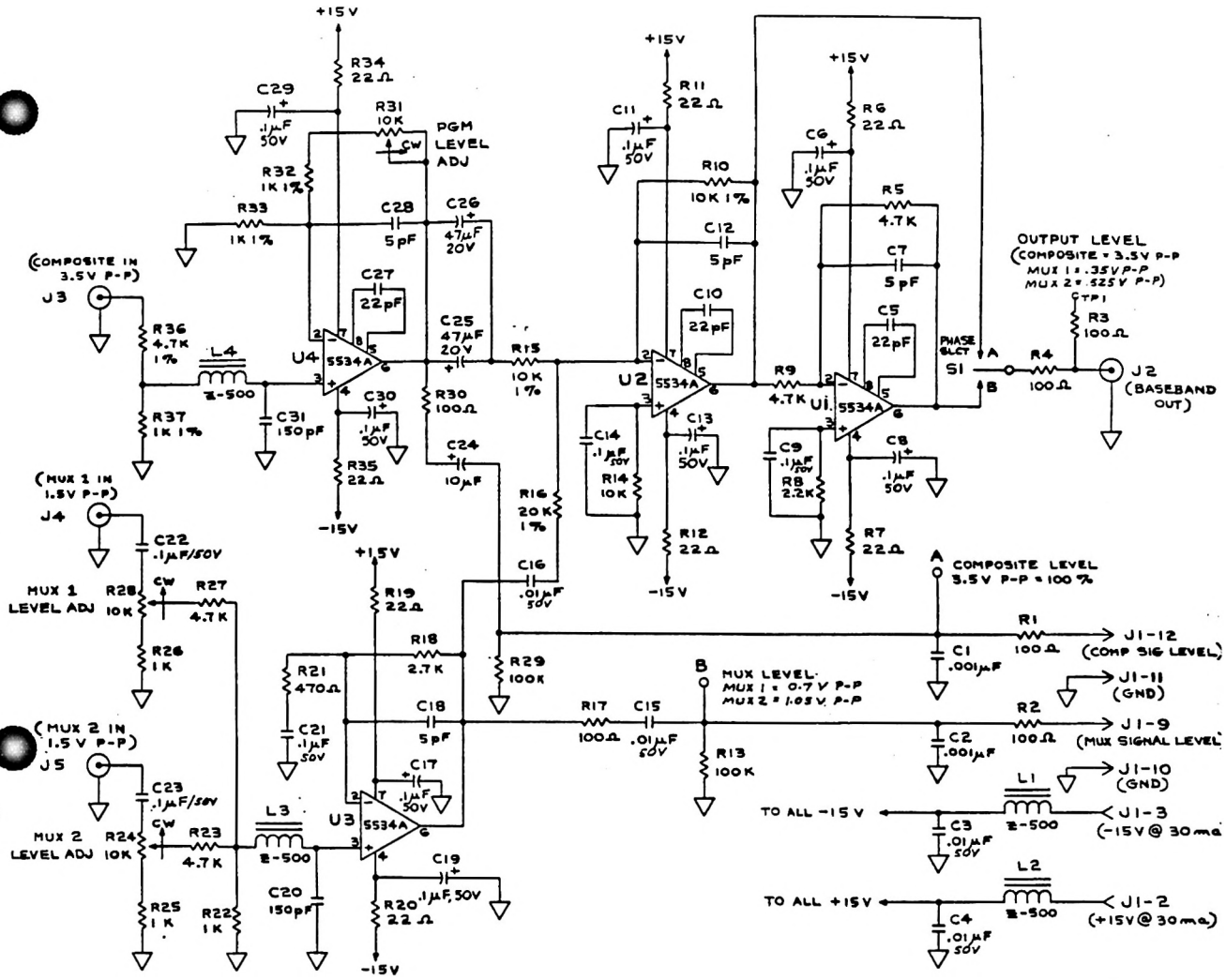

NOTES:

1. UNLESS OTHERWISE SPECIFIED, RESISTORS ARE IN OHMS, 1/4 W, 10%. CAPACITORS ARE IN MICROFARADS
2. P C BD 51D5948
3. COMPONENT LAYOUT 20D2831
4. POINTS "A" AND "B" ARE DIAGNOSTIC TEST POINTS

USED ON: PCL-606 TRANSMITTER

C	ECO 3894 6/23/83	REVISIONS	DATE

MOSELEY ASSOCIATES, INC.
SANTA BARBARA RESEARCH PARK
GOLETA, CALIFORNIA 93117

SCHEMATIC
COMPOSITE AUDIO PROCESSOR

TOL: FRACT. ± 1/32, .XX ± .030, .XXX ± .010, ∠ ± 1/2°

DWN			SCALE:
CHK			91D7282
ENG			C

MGMT. APPR.

MOSELEY ASSOCIATES, INC.
111 CASTILIAN DRIVE
SANTA BARBARA, CA 93117-3093
(805) 968-9621

DATE: 1/19/87

PARENT ITEM: 9301318 DESCRIPTION: ASSY AUDIO PROC COMP PCL-606TX
ENG.DRAWING NO.: 2002831 L

REF NBR	COMPONENT ITEM NBR	COMPONENT DESCRIPTION & COMMENTS	ENG.DRAWING NO.		QUANTITY PER	UM
1	3473147	PCB COMP AUDIO PROC PCL-606	5105948	G	1.000	EA
2	2090967	FRAME BASE MODULE PCL-606	05C2867	E	1.000	EA
3	2091056	FRAME AUD PROC XMTR PCL-606	05D2876	F	1.000	EA
5	2090975	COVER MODULE PCL-606	05C2868	D	2.000	EA
6	3190253	SW SLD S1	23 021 114		1.000	EA
7	3730726	IC NE5534AN OPAMP LO NOISE U1,U2,U3,U4	NE-5534AN		4.000	EA
8	3250016	SKT DUAL IN LINE 8 PIN U1,U2,U3,U4	640463-1		4.000	EA
9	4630695	POT CER PC PIN 10K OHM .75W20T R24,R28,R31	43P103		3.000	EA
10	4510301	RES 1.00K OHM 1/8W 1% R32,R33,R37	RN55D1001F		3.000	EA
11	4510095	RES 4.75K OHM 1/8W 1% R36	RN55C4751F		1.000	EA
12	4510145	RES 10.0K OHM 1/8W 1% R10,R15	RN55C1002F		2.000	EA
13	4510160	RES 20.0K OHM 1/8W 1% R16	RN55E2002F		1.000	EA
14	4410122	RES 100 OHM 1/4W 10% R1,R2,R3,R4,R17,R30	RC07GF101K		6.000	EA
15	4410049	RES 22 OHM 1/4W 10% R6,C7,C11,R12,R19,R20,R34,R35	RC07GF220K		8.000	EA
16	4410205	RES 470 OHM 1/4W 10% R21	RC07GF471K		1.000	EA
17	4410247	RES 1K OHM 1/4W 10% R22,R25,R26	RC07GF102K		3.000	EA
18	4460242	RES 4.7K OHM 1/4W 5% R5,R9,R23,R27	RC07GF472J		4.000	EA
19	4410296	RES 2.7K OHM 1/4W 10% R18	RC07GF272K		1.000	EA
20	4410379	RES 10K OHM 1/4W 10% R14	RC07GF103K		1.000	EA
21	4410494	RES 100K OHM 1/4W 10% R13,R29	RC07GF104K		2.000	EA
22	4410288	RES 2.2K OHM 1/4W 10% R8	RC07GF222K		1.000	EA
23	1130491	WSHR SST 5710-35-16 J2,J3,J4,J5	5710-35-16		4.000	EA
24	4020457	FERROX CUBE 500 OHM L1,L2,L3,L4	VK200 10/3B		4.000	EA
26	3090230	CONN SMB PC RT ANG MALE BLKHD J2,J3,J4,J5	2110-1511-000		4.000	EA
27	3090222	CONN 12PIN SNGL ROW RTANG HDR J1	1-87233-2		1.000	EA

REF NBR	COMPONENT ITEM NBR	COMPONENT DESCRIPTION & COMMENTS	ENG.DRAWING NO.	QUANTITY PER	UM
28	3290152	JACK TEST WHITE R ANGLE TP1	430-101	1.000	EA
30	4210043	CAP MICA DIP 5PF +/- 0.5 C7,C12,C16,C28	DM-15-050D	4.000	EA
31	4210100	CAP MICA DIP 22PF 5% C5,C10,C27	DM-15-220J	3.000	EA
32	4210308	CAP MICA DIP 150PF 5% C20,C31	DM-15-151J	2.000	EA
33	4310264	CAP .1 50V Z5U 20% C6,C8,C9,C11,C13,C14,C17,C19,C21,C22,C23,C29, C30	5020ES50RD104M	13.000	EA
34	4310272	CAP .01 50V X7R 10% C3,C4,C15,C16	5018EM50RD103K	4.000	EA
35	4310108	CAP DISC CER .001/1KV C1,C2	DD-102G	2.000	EA
37	4280079	CAP TANT EPOX-DIP 10/25V 20% C24	196D106X0025KA1	1.000	EA
38	4280137	CAP TANT EPOX-DIP 47/20V C25,C26	196D476X0020PE4	2.000	EA
39	1050129	SCR PNH PHPS 4-40 X 1/4 SST		2.000	EA
40	1310093	CLIP PCL-606	05C2882 B	16.000	EA

FMO SYNTHESIZER

Schematic 91D7389
Parts List 20D2951

The FMO Synthesizer module consists of three main subgroups: the RF group, the digital group, and the loop filter. The RF group includes the oscillator (FMO), buffer, reference oscillator, and low-pass filter. The digital group includes a level translator, a presettable divide-by-N counter, and a phase/frequency comparator.

These three groups provide a functional module that has good short-term stability, low noise, and is tunable over a wide frequency range. Selecting the appropriate divide ratio synthesizes the crystal-controlled reference oscillator and ensures long-term stability.

The FMO (frequency modulated oscillator) consists of low-noise field effect transistor Q4 in an RF grounded base configuration. The drain of Q4 is connected to the resonant circuit inductor and capacitors. The capacitance for this circuit is provided by C42, C43, C44, and C45. The inductance consists of a stripline inductor on the PC board. Feedback to cause oscillation is from the drain to the source consisting of C44 and C45. The normal frequency range of the oscillator is 60 to 80 MHz.

The modulation signal enters the FMO module at J4 and is routed to the deviation select jumper E-1, which is used to select one of the two preset modulation sensitivities of the FMO for wideband or narrowband operation. Potentiometer R53 is used to calibrate the FMO modulation sensitivity for the two preset conditions. The modulation signal is then applied to CR9, which is a variable capacitance diode. CR9 is coupled to the resonant circuit by C42. R44 adjusts the bias on CR9 and is set for minimum modulation distortion, usually approximately -5 volts. R53 adjusts the amount of modulation on the bias voltage applied to CR9. 3.5 V peak-to-peak input at J4 will produce 100% modulation (50 kHz deviation).

Integrated circuit U11 is a buffer amplifier and drives Q1 and low-pass filter L5 and L6, which attenuate the harmonics of the FMO. The frequency stability of the FMO is maintained by CR8, which is attached to the stripline inductor through C39. A voltage generated by the AFC circuitry changes the capacitance of CR8, which is also part of the tuning of the FMO resonant circuit. This AFC circuitry changes the capacitance of CR8, which is also part of the

tuning of the FMO resonant circuit. This AFC voltage is derived by phase comparing the divided output of the FMO with the divided output of a crystal reference oscillator.

Q1 is a buffer amplifier which acts as a level translator to TTL levels to drive U6. U6 is a decade counter prewired to divide by 10. Its output is connected to the input of a four-decade presettable divide-by-N counter, U1 through U4. Setting of the divide ratio is done by S1 through S4. S1 sets the most significant digit. The overall divide ratio may be set to any number up to 99,990. The usual divide ratios are 60,000 to 80,000, which will lock the FMO between 60 MHz and 80 MHz.

U5 is a five-input NOR gate used to drive the load line. It is connected so that the counter divides by N exactly. Since the duration of the load pulse is too short to drive phase/frequency comparator U9, it is stretched to approximately 50% duty cycle by U7. U7 is a nonretriggerable one-shot. The frequency of the square wave at pin 14 of U9 is 1 kHz when the AFC is locked.

Crystal Y1, Q3 and Q2 comprise a reference oscillator and buffer. Frequency Trim control C21 is used to set the output frequency of this oscillator to 4.096 MHz. This is divided by 4096 in U8, which delivers a 1 kHz reference frequency to pin 3 of phase/frequency comparator U9.

The average dc voltage at the output of U9 pin 13 is internally biased to half the supply voltage and deviates from this by an amount proportional to the phase difference of the two 1 kHz signals at pins 3 and 14.

Loop filter U10 is an integrating low-pass filter that removes most of the 1 kHz component of the phase comparator output. It also provides dc gain to decrease the very low frequency noise of the FMO. Further filtering of the AFC voltage is then delivered to CR8 through R54, closing the AFC loop. AFC level adjust C43 is used to place the phase-locked loop in the center of its operating control range. This is indicated by a nominal +7 V level at TP1 (AFC Level).

The average voltage at U9 pin 1 is +5 V when the loop is locked. If the loop becomes unlocked, the average voltage drops to 2.5 V. This causes the output of U10 pin 1 to change from plus to minus, which lights the red LOSS OF LOCK LED on the module. When lock is lost, the voltage at J1-11 and J11-12 drops from +5 V to 0 V, causing the 12.5 V power supply voltage to drop to 1.5 V, which removes the 8watt RF output.

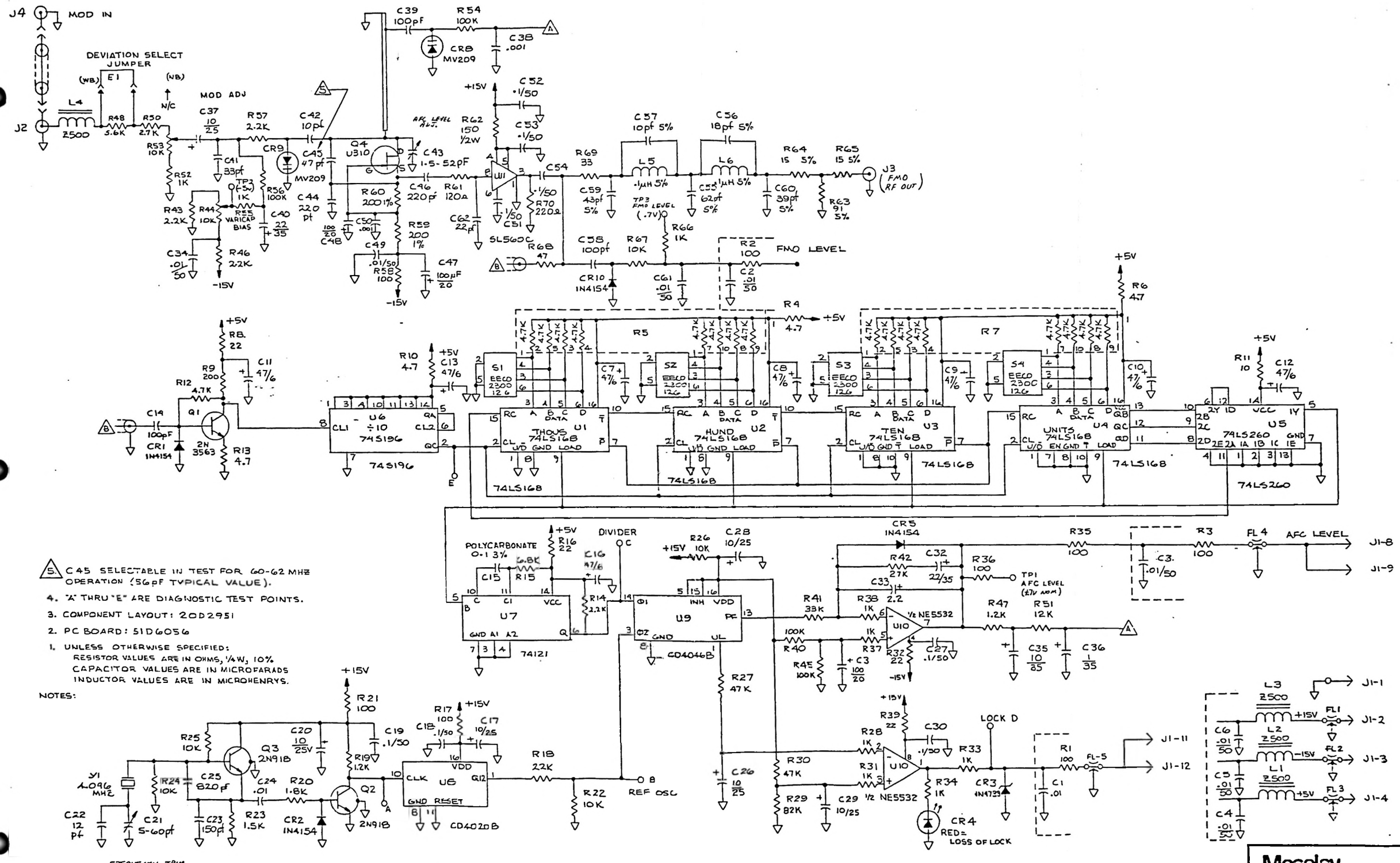

5. C45 SELECTABLE IN TEST FOR 60-62 MHZ OPERATION (56pF TYPICAL VALUE).

4. "A" THRU "E" ARE DIAGNOSTIC TEST POINTS.

3. COMPONENT LAYOUT: 20D2951

2. PC BOARD: 51D6056

1. UNLESS OTHERWISE SPECIFIED:
   RESISTOR VALUES ARE IN OHMS, 1/4W, 10%
   CAPACITOR VALUES ARE IN MICROFARADS
   INDUCTOR VALUES ARE IN MICROHENRYS.

NOTES:

Moseley

Schematic
FMO/Synth. 60 - 80 MHz

TOL: FRACT. ± 1/32 .XX ± .010 .XXX ± .005 ∠ ± 1/2°

DRN
CHK
ENG

SCALE:

91D7389 1

MUSELEY ASSOCIATES, INC.
111 CASTILIAN DRIVE
SANTA BARBARA, CA 93117-3093
(805) 968-9621

DATE: 1/16/87

PARENT ITEM: 9302175 DESCRIPTION: SUB ASSY FMO/SYNTH 60-80 MHZ
ENG.DRAWING NO.: 2002951 PRE

REF NBR	COMPONENT ITEM NBR	COMPONENT DESCRIPTION & COMMENTS	ENG.DRAWING NO.	QUANTITY PER	UM
1	3473949	PCB FMO/SYNTH SEC	5106056 PRE	1.000	EA
3	3150133	SW 10P BCD ROT OUTPUT "ORANGE" S1,S2,S3,S4	230012G	4.000	EA
4	3290152	JACK TEST WHITE R ANGLE TP1,TP2,TP3	430-101	3.000	EA
5	3390549	LED RED 2.0@20 WIDE RT/HOLDER CR4	550-0406	1.000	EA
6	3340775	XTAL 4.096 HC-25 FMO PCL-606 Y1	30A0078 AO	1.000	EA
7	3250495	SKT PIN .0850DX.200L GOLD FIN Y1	450-3286-01-03	2.000	EA
8	3250016	SKT DUAL IN LINE 8 PIN U10	640463-1	1.000	EA
9	3250024	SKT DUAL IN LINE 14 PIN U5,U6,U7	640357-1	3.000	EA
10	3250032	SKT DUAL IN LINE 16 PIN U1,U2,U3,U4,U8,U9	640358-1	6.000	EA
11	3661121	IC DEC/BI-QUIN COUNT/LATCH U6	74S196	1.000	EA
12	3680261	IC BIN COUNT/DIVIDER U8	CD4020BE	1.000	EA
13	3660253	IC PHASE-LOCKED LOOP U9	CD4046BE	1.000	EA
14	3660388	IC SN74121N MONOMULTI ST U7	SN74121N	1.000	EA
15	3660966	IC SN74LS260N DU 5IN NOR U5	SN74LS260N	1.000	EA
16	3661105	IC DEC 48IT UP/DWN SYNC COUNT U1,U2,U3,U4	N74LS168AN	4.000	EA
17	3730967	IC DUAL OP AMP U10	NE5532AN	1.000	EA
18	3730769	IC SL560C U11	SL560C	1.000	EA
19	4020640	IDCTR MINI-RED .1 UH 5% L5,L6	MR .10 5%	2.000	EA
20	4020467	FERROX CUBE 500 OHM L1,L2,L3,L4	VK200 10/38	4.000	EA
21	3640307	XT U310 Q4	U310	1.000	EA
22	3630076	XT NS2N3563 .2W600M030V50M2P Q1	2N3563	1.000	EA
23	3630001	XT NS2N918 .4W600M030V50M2P Q2,Q3	2N918	2.000	EA
24	3610250	DIO 30V 6/30 PF TO92 MV209 CR8,CR9	MV209	2.000	EA

REF NBR	COMPONENT ITEM NBR	COMPONENT DESCRIPTION & COMMENTS	ENG.DRAWING NO.	QUANTITY PER	UM
25	3600178	DIO Z1N4733A 5.1V 1W 5% A1AY CR3	1N4733A Z5.1A	1.000	EA
26	3600145	DIO 1N4154 25V 4NS SI 0035 CR1,CR2,CR5,CR10	1N4154	4.000	EA
27	4250486	CAP POLYCARB .1/100V 3% C15	22U8104H	1.000	EA
28	4350401	CAP CHIP 100PF 5% P90 C39	100B101JP500X	1.000	EA
29	4210100	CAP MICA DIP 22PF 5% C62	DM-15-220J	1.000	EA
30	4410130	RES 120 OHM 1/4W 10% R61	RC07GF121K	1.000	EA
31	4370359	CAP VAR 1.0-60PF GLASS EMB8AND C43	TP60C	1.000	EA
32	4350500	CAP ADJ 5-60PF C21	GXD60000	1.000	EA
33	4210530	CAP MICA DIP 820PF 5% C25	DM-15-821J	1.000	EA
34	4210308	CAP MICA DIP 150PF 5% C23	DM-15-151J	1.000	EA
35	4210068	CAP MICA DIP 12PF 5% C22	DM-15-120J	1.000	EA
36	4210266	CAP MICA DIP 100PF 5% C14,C58	DM-15-101J	2.000	EA
37	4210084	CAP MICA DIP 18PF 5% C56	DM-15-180J	1.000	EA
38	4210555	CAP MICA DIP 10PF 5% C57	DM15-100J	1.000	EA
39	4210217	CAP MICA DIP 62PF 5% C55	DM-15-620J	1.000	EA
40	4210175	CAP MICA DIP 43PF 5% C59	DM-15-430J	1.000	EA
41	4210142	CAP MICA DIP 33PF 5% C41	DM-15-330J	1.000	EA
42	3291069	FILTER FEED THRU SM THD FL1,FL2,FL3,FL4,FL5	859619-1	5.000	EA
43	4280046	CAP TANT EPOX-DIP 2.2/35V 20% C33	196D225X0035JA1	1.000	EA
44	4280038	CAP TANT EPOX-DIP 1/35V 20% C36	196D105X0035HA1	1.000	EA
45	4210167	CAP MICA DIP 39PF 5% C60	DM-15-390J	1.000	EA
46	4280095	CAP TANT EPOX-DIP 22/35V 10% C32,C40	196D226X9035PE4	2.000	EA
47	4280152	CAP TANT EPOX-DIP 100/20V 10% C31,C47,C48	196D107X9020TE4	3.000	EA
48	4280079	CAP TANT EPOX-DIP 10/25V 20% C17,C20,C26,C28,C29,C35,C37	196D106X0025KA1	7.000	EA
49	4280129	CAP TANT EPOX-DIP 47/6V 20% C7,C8,C9,C10,C11,C12,C13,C16	196D476X0006JA1	8.000	EA
50	4310272	CAP .01 50V X7R 10% C1,C2,C3,C4,C5,C6,C24,C34,C49,C61	5018EM50RD103K	10.000	EA

REF NBR	COMPONENT ITEM NBR	COMPONENT DESCRIPTION & COMMENTS	ENG.DRAWING NO.	QUANTITY PER	UM
51	4310264	CAP .1 50V Z5U 20% C18,C19,C27,C30,C51,C52,C53,C54	5020ES50RD104M	8.000	EA
52	2201119	CABLE BOTH END PIGTAIL 11.5	24C1064-11.5 C	1.000	EA
53	4350666	CAP CHIP .001 UF 5% P90 C38,C50	100B102JP50X	2.000	EA
54	4350575	CAP CHIP 47 PF 5% P90 C45	100B470JP500X	1.000	EA
55	4350419	CAP CHIP 220PF 5% P90 C44,C46	100B221JP200X	2.000	EA
56	4350591	CAP CHIP 10PF 5% P90 C42	100B100JP500X	1.000	EA
57	4630695	POT CER PC PIN 10K OHM .75W20T R44,R53	43P103	2.000	EA
58	1641927	W BUSS 22GA	298	.417	FT
59	3090230	CONN SMB PC RT ANG MALE BLKHD J3	2110-1511-000	1.000	EA
61	2300853	ASSY CABLE FMO/SYNTH PCL-606 J1	24B1089 A	1.000	EA
62	1050129	SCR PNH PHPS 4-40 X 1/4 SST		2.000	EA
63	4410387	RES 12K OHM 1/4W 10% R51	RC07GF123K	1.000	EA
64	4410411	RES 22K OHM 1/4W 10% R18	RC07GF223K	1.000	EA
65	4410486	RES 82K OHM 1/4W 10% R29	RC07GF823K	1.000	EA
66	4410429	RES 27K OHM 1/4W 10% R42	RC07GF273K	1.000	EA
67	4410437	RES 33K OHM 1/4W 10% R41	RC07GF333K	1.000	EA
68	4410353	RES 6.8K OHM 1/4W 10% R15	RC07GF682K	1.000	EA
69	4410452	RES 47K OHM 1/4W 10% R27,R30	RC07GF473K	2.000	EA
70	4410247	RES 1K OHM 1/4W 10% R28,R31,R33,R34,R37,R38,R52,R55,R66	RC07GF102K	9.000	EA
71	4410379	RES 10K OHM 1/4W 10% R22,R24,R25,R26,R67	RC07GF103K	5.000	EA
72	4410270	RES 1.8K OHM 1/4W 10% R20	RC07GF182K	1.000	EA
73	4410262	RES 1.5K OHM 1/4W 10% R23	RC07GF152K	1.000	EA
74	4410254	RES 1.2K OHM 1/4W 10% R19,R47	RC07GF122K	2.000	EA
75	4410080	RES 47 OHM 1/4W 10% R68	RC07GF470K	1.000	EA
76	2091064	COVER BOTTOM FMO/SYNTH PCL-606	05C2888 D	1.000	EA
77	4410338	RES 4.7K OHM 1/4W 10% R12	RC07GF472K	1.000	EA
78	4410288	RES 2.2K OHM 1/4W 10% R14,R43,R45,R57	RC07GF222K	4.000	EA
79	4410015	RES 4.7 OHM 1/4W 10% R4,R6,R10,R13	RC07GF4R7K	4.000	EA

REF NBR	COMPONENT ITEM NBR	COMPONENT DESCRIPTION & COMMENTS	ENG.DRAWING NO.		QUANTITY PER	UM
80	4510004	RES 200 OHM 1/8 W 1% R59,R60	RN55E2000F		2.000	EA
81	4420162	RES 150 OHM 1/2W 10% R62	RC20GF151K		1.000	EA
82	4410122	RES 100 OHM 1/4W 10% R1,R2,R3,R17,R21,R35,R36,R58	RC07GF101K		8.000	EA
83	4410049	RES 22 OHM 1/4W 10% R8,R16,R32,R39	RC07GF220K		4.000	EA
84	4410064	RES 33 OHM 1/4W 10% R69	RC07GF330K		1.000	EA
85	4460010	RES 10 OHM 1/4W 5% R11	RC07GF100J		1.000	EA
86	4540183	RES SIP 4.7K OHM 1/4W 10% R5,R7	750-101-4.7K		2.000	EA
88	1310093	CLIP PCL-606	05C2882	B	20.000	EA
89	2092047	FRAME FMO/SYNTH PCL-606 SEC	05D3164		1.000	EA
90	2090967	FRAME BASE MODULE PCL-606	05C2867	E	1.000	EA
91	4410163	RES 220 OHM 1/4W 10% R9,R70	RC07GF221K		2.000	EA
92	4410494	RES 100K OHM 1/4W 10% R40,R45,R54,R56	RC07GF104K		4.000	EA
93	2202307	ASSY COAX SMB/S-SMB PC/RT 10 J2 TO J4	24B1091-3	A1	1.000	EA
94	2110237	HEATSINK TO-5 PUSH-ON U11	#11158		1.000	EA
95	4460747	RES 15 OHM 1/4W 5% R64,R65	RC07GF150J		2.000	EA
96	4461018	RES 91 OHM 1/4W 5% R63	RC07GF910J		1.000	EA
97	3090370	CONN 3 PIN SNGL ROW STR HDR E1	87224-3		1.000	EA
98	3250917	JUMPER MINI FOR 2 PINS=.025/.1 E1	65474-001		1.000	EA
99	4460200	RES 2.7K OHM 1/4W 5% R50	RC07GF272J		1.000	EA
100	4460259	RES 5.6K OHM 1/4W 5% R48	RC07GF562J		1.000	EA

UP CONVERTER

Schematic 91C7384
91B7381
Assembly/Parts List 20C2934
20C2935
20C2944

The Up Converter module, 950 MHz, consists of three separate subassemblies. First is the Up-Converter mixer, 950 MHz, which consists of a double balanced mixer (U1). Next is the Up-Converter filter, 950 MHz, which is a five-pole, interdigital, tunable bandpass filter designed so that the 1020 MHz LO signal and the 1090 MHz sum of the LO and FMO signals are more than -60 dB below the 950 MHz carrier frequency. The last subassembly is the Up-Converter amplifier, 950 MHz, which is a three-stage broadband RF amplifier with the first two stages operating class A linear and the output stage operating in compression to minimize any changes in gain over a wide temperature range.

The output of the 60-80 MHz frequency modulated oscillator (FMO) (0 +/-2 dBm) is fed into the double-balanced mixer along with the 1020 MHz fixed local oscillator signal (+8 +/-2 dBm). The resulting 940-960 MHz signal level is typically -10 dBm. The signal is then filtered and amplified to a nominal +16 dBm output, which in turn is fed to the RF Amplifier module. A high degree of repeatability and reliability is achieved by using advanced microstrip design technology in the broadband amplifier.

An output power detector (CR1, R8, C14) is provided for the Up-Converter amplifier. Relative power is detected and relayed to the front panel meter via the Metering and Status board. In the IPA LEVEL position, the front panel meter shows a relative power indication for the Up-Converter amplifier and should read in the shaded area of the lower reference arc.

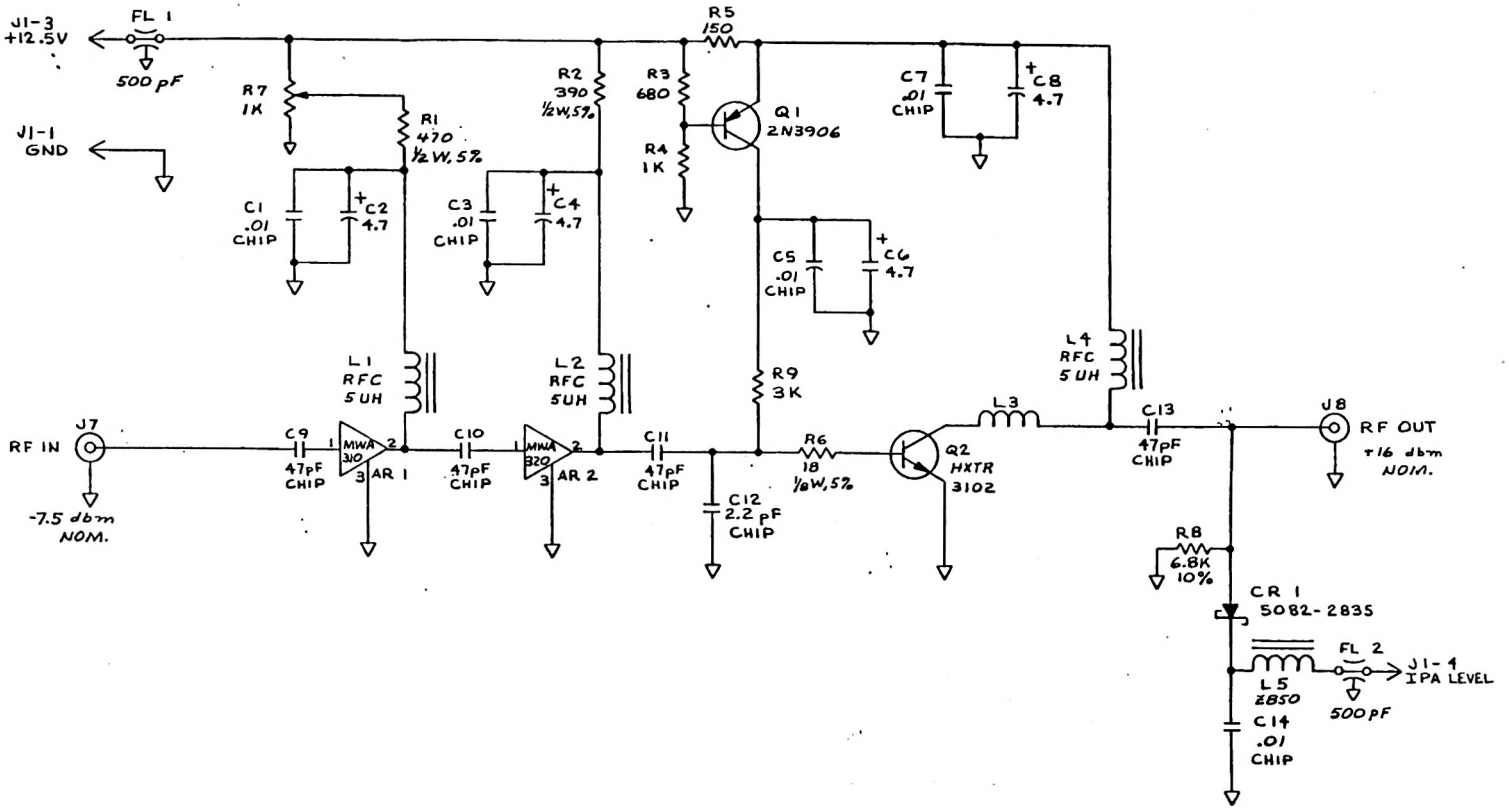

3. COMPONENT LAYOUT: 20C2935
2. P.C. BOARD: 51C6048
1. UNLESS OTHERWISE SPECIFIED:
   RESISTOR VALUES ARE IN OHMS, 1/4 WATT, 5%
   CAPACITOR VALUES ARE IN MICROFARADS

NOTES:

Moseley

Schematic, 890 - 960 MHz.
Up-Converter Amp.

91C7384 A

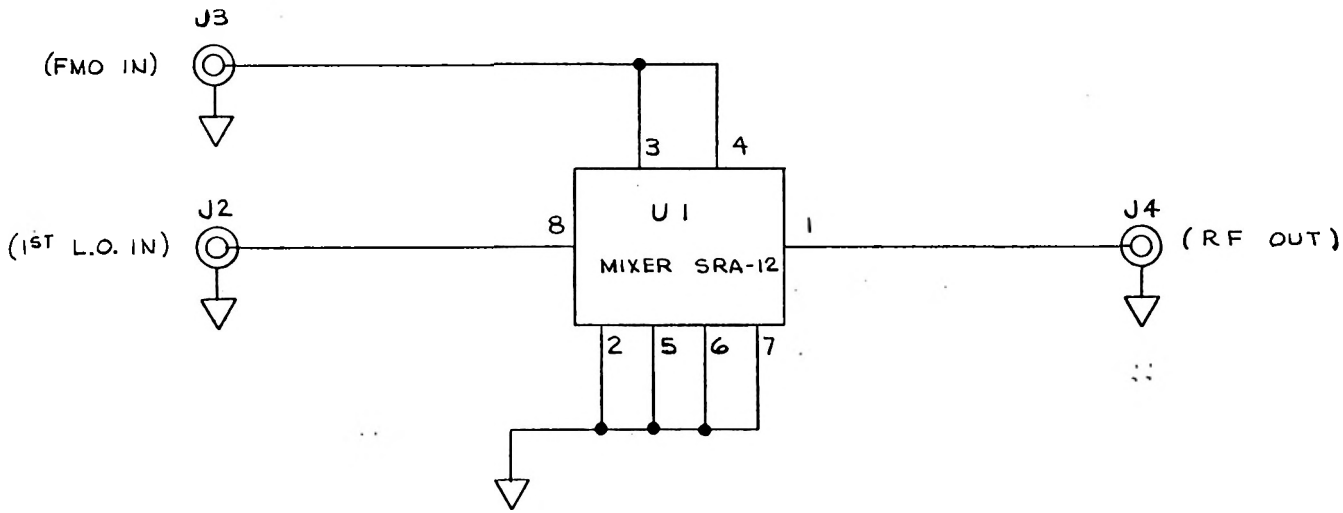

2. COMPONENT LAYOUT: 20C2944.
1. P.C. BOARD: 51C6051.

NOTES:

Moseley

Schematic
Up-Converter Mixer

TOL: FRACT. ± 1/32, .XX ± .03, .XXX ± .005, ∠ ± 1/2°

DWN
CHK
ENG

SCALE:

91B7381 A

REVISIONS | DATE | DWN | APPL.

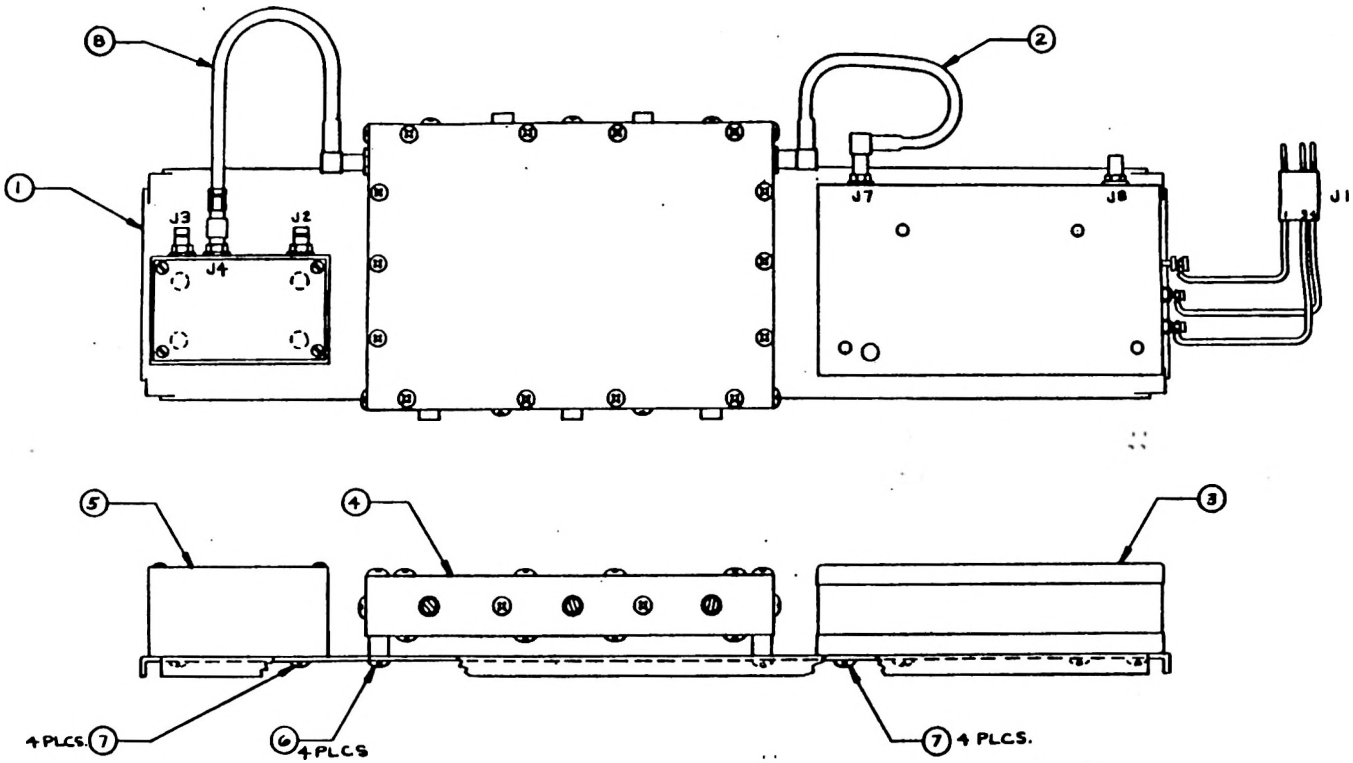

Moseley

Assembly
Up-Converter 890 - 960 MHz.

SCALE:

20C2934 A

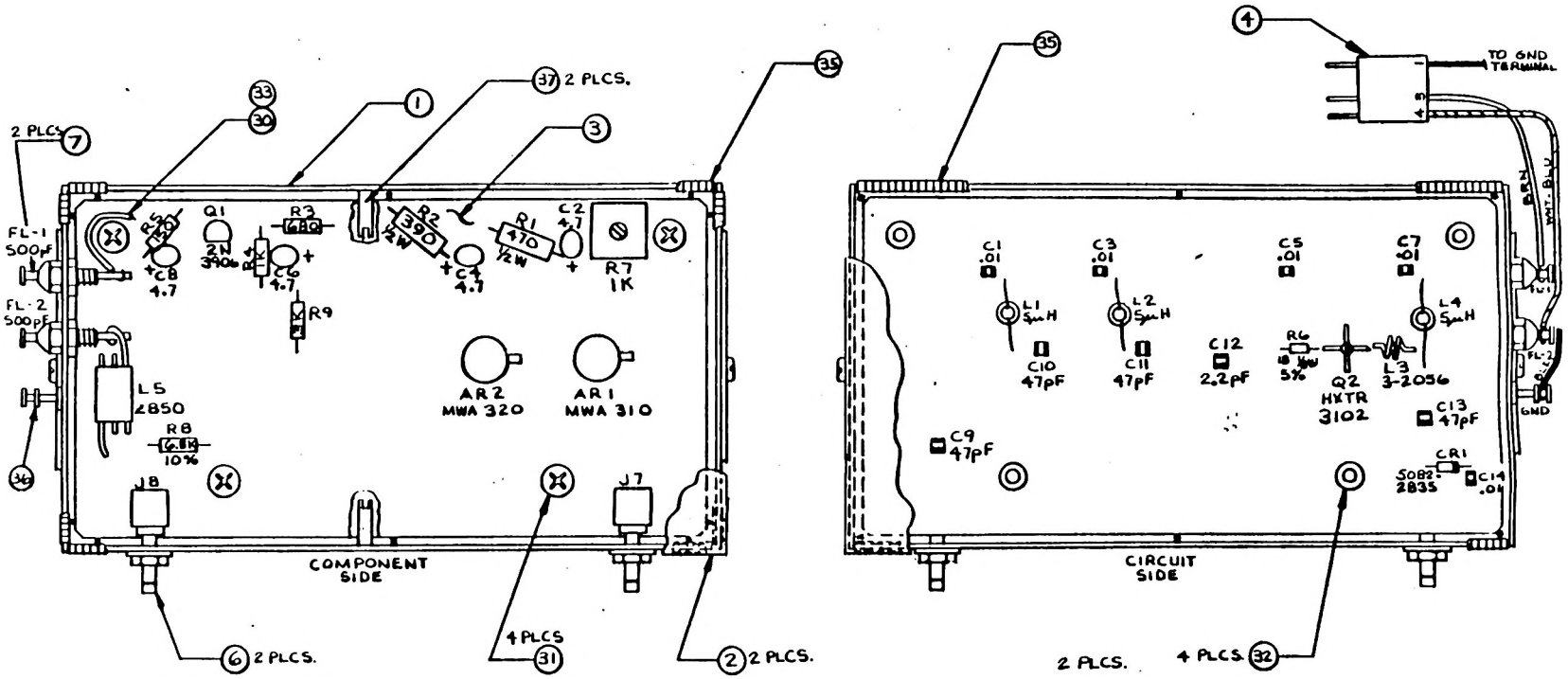

4. USE SILVER BEARING SOLDER SN 62 PER QQS571 ON ALL SURFACE MOUNTED COMPONENTS.
3. SCHEMATIC : 91C7384
2. PC BD : 51C6048
1. UNLESS OTHERWISE SPECIFIED:
   RESISTOR VALUES ARE IN OHMS, 1/4 W, 5%
   CAPACITOR VALUES ARE IN MICROFARADS

NOTES:

Moseley			
Component Layout Up-Converter Amp. 890 - 960 MHz.			
TOL: FRACT. ± 1/32, .XX ± .030, .XXX ± .005, ∠ ± 1/2°			
DRWN		SCALE:	
CHK			
ENG		20C2935	C

MOSELEY ASSOCIATES, INC.
111 CASTILIAN DRIVE
SANTA BARBARA, CA 93117-3093
(805) 968-9621

DATE: 1/19/87

PARENT ITEM: 9104753 DESCRIPTION: ASSY UPCONVERT 890-960 MHZ
ENG.DRAWING NO.: 20C2934 A

REF NBR	COMPONENT ITEM NBR	COMPONENT DESCRIPTION & COMMENTS	ENG.DRAWING NO.		QUANTITY PER	UM
1	2091924	PLATE MOUNTING UPCONV	05C3115	A	1.000	EA
2	2202638	ASSY COAX SMB/RT-SMB/RT 5"	2481074-6	B	1.000	EA
3	9302027	ASSY UP-CONV AMP 890-960 MHZ	20C2935	C	1.000	EA
4	9302092	ASSY PRESEL 960MHZ	20C2947	A	1.000	EA
5	9302066	ASSY UPCONV MIXER 890-960	20C2944	A	1.000	EA
6	1050185	SCR PNH PHPS 4-40 X 1/2 SST			4.000	EA
7	1050129	SCR PNH PHPS 4-40 X 1/4 SST			8.000	EA
8	2201986	ASSY CA SMB/RT-SMB/S 6"	2481075-1	D	1.000	EA

MOSELEY ASSOCIATES, INC.
111 CASTILIAN DRIVE
SANTA BARBARA, CA 93117-3093
(805) 968-9621

DATE: 1/19/87

PARENT ITEM: 9302027 DESCRIPTION: ASSY UP-CONV AMP 890-960 MHZ
ENG.DRAWING NO.: 20C2935 C

REF NBR	COMPONENT ITEM NBR	COMPONENT DESCRIPTION & COMMENTS	ENG.DRAWING NO.		QUANTITY PER	UM
1	2091932	FRAME UPCONV AMP	0583116	B	1.000	EA
2	2091940	COVER ENCL UPCONV AMP	0583117	B	2.000	EA
3	3473816	PCB UP-CONVERTER AMP	51C6048	A	1.000	EA
4	2301059	ASSY CA UPCONV AMP	2481119	A	1.000	EA
5	4010971	COIL AIR L3	03-2056	A	1.000	EA
6	3090230	CONN SMB PC RT ANG MALE BLKHD J7,J8	2110-1511-000		2.000	EA
7	4350088	CAP FD THRU 500PF FL1,FL2	2425001X500501A		2.000	EA
8	3630464	XT 2N3906 Q1	2N3906		1.000	EA
9	3640299	XT HXTR-3102 Q2	HXTR-3102		1.000	EA
10	4050209	CHOKE RF 7.2 UH+/-20% L1,L2,L4	0383012	B	3.000	EA
11	4020356	FERROX-CUBE 350 OHM L5	VK 200 20/48		1.000	EA
12	3610045	DIO 5082-2835 FAST CR1	5082-2835		1.000	EA
13	3731153	IC HYBRID LIN AMP AR1	MWA 310		1.000	EA
14	3731171	IC HYBRID LIN AMP AR2	MWA 320		1.000	EA
15	4030067	POT CER PC PIN 1K OHM .5W R7	3385R-1-102		1.000	EA
16	4450078	RES 18 OHM 1/8W 5% R8	RC05GF180J		1.000	EA
17	4410353	RES 6.8K OHM 1/4W 10% R5	RC07GF682K		1.000	EA
18	4460812	RES 150 OHM 1/4W 5% R5	RC07GF151J		1.000	EA
19	4460135	RES 680 OHM 1/4W 5% R3	RC07GF681J		1.000	EA
20	4460143	RES 1K OHM 1/4W 5% R4	RC07GF102J		1.000	EA
21	4460213	RES 3K OHM 1/4W 5% R9	RC07GF302J		1.000	EA
22	4470068	RES 390 OHM 1/2W 5% R2	RC20GF391J		1.000	EA
23	4470075	RES 470 OHM 1/2W 5% R1	RC20GF471J		1.000	EA
24	4350161	CAP .01UF CHIP C1,C3,C5,C7,C14	M1J08F103MP		5.000	EA
25	4350773	CAP CHIP 2.2 PF +/-.25PF P90 C12	100R2R2CP500X		1.000	EA

REF NBR	COMPONENT ITEM NBR	COMPONENT DESCRIPTION & COMMENTS	ENG.DRAWING NO.	QUANTITY PER	UM
26	4350575	CAP CHIP 47 PF 5% P90 C9,C10,C11,C13	1008470JP500X	4.000	EA
27	4280055	CAP TANT EPOX-DIP 4.7/35V 10% C2,C4,C6,C8	196D475X0035JA1	4.000	EA
30	1641943	W BUSS 26GA	299/1	.060	FT
31	1050129	SCR PNH PHPS.4-40 X 1/4 SST		4.000	EA
32	1230119	SPCR 1/4 RND 4-40 X 3/8 BRS	2371	4.000	EA
33	1560259	TBG TEFLON 26AWG NAT	TFT200-26	.040	FT
34	1010297	SCR PNH SLTD #2 X 1/4 TYP B		2.000	EA
35	1290097	STICKLEFINGER 1o LI	97-380-A	1.500	EA
36	3290566	TERM SWAGE	1300A 4.5	1.000	EA
37	1210178	TERM SOLDER	STU-125-4	2.000	EA

MUSELEY ASSOCIATES, INC.
111 CASTILIAN DRIVE
SANTA BARBARA, CA 93117-3093
(805) 968-9621

DATE: 1/19/87

PARENT ITEM: 9302068 DESCRIPTION: ASSY UPCONV MIXER 890-960
ENG.DRAWING NO.: 20C2944 A

REF NBR	COMPONENT ITEM NBR	COMPONENT DESCRIPTION & COMMENTS	ENG.DRAWING NO.		QUANTITY PER	UM
1	3473881	PCB UP-CONV MIXER 890-960	51C6051	A	1.000	EA
2	2091361	ENCL UP-CONV MIXER 100-500 MHZ	05C2963	D	1.000	EA
3	3350188	MIXER U1	SRA-12		1.000	EA
4	3090230	CONN SMB PC RT ANG MALE BLKHD J2,J3,J4	2110-1511-000		3.000	EA

FIRST LOCAL OSCILLATOR

Schematic 91D7288
Parts List 20D2828-1

The output LO signal is derived from a crystal-controlled oscillator which uses an oven-mounted crystal for frequency stability. The signal is buffered and then quadrupled by a pair of active push-push doublers. Filtering is provided between each multiplication to remove unwanted harmonics. The signal is amplified and fed to a step-recovery diode multiplier, and the output is filtered to select the desired harmonic. The signal is then attenuated to control the output impedance which reduces the power to the level required by the mixer.

On-board power supply regulation eliminates frequency drifts due to line voltage variations.

The output local oscillator signal is derived from crystal-controlled oscillator Q1. The third overtone crystal is temperature stabilized by a 65 degree C proportionally controlled oven. The output frequency is adjustable by tuning FREQ ADJ L6; this adjustment causes only small output amplitude variations. Oscillator buffer Q2 isolates the oscillator, preventing frequency pulling when adjusting the multipliers.

The output of the buffer is doubled in an active push-push doubler. The single-ended input from the buffer is split into two out-of-phase voltages in T1 and fed to the bases of two transistors of integrated array U1. The output of these two transistors is summed at their collectors. The close matching of the integrated transistors provides suppression of the fundamental signal driving the bases. The fundamental frequency is further suppressed by an interstage bandpass filter consisting of L15, C18 to C21, L11, C24, L12 and C28.

The second doubler consists of Q3 and Q4. The circuit is essentially the same as the first doubler, but a discrete-component design is used because of the higher frequency and power that are required.

The output of the second doubler is amplified by Q5 to the power level (120 mW) required by the diode multiplier. The output of Q5 is tuned by C39 and impedance matched in two

stages to the step-recovery diode multiplier by C38, C41, and L17, and then by C43 and L18. The diode self-bias current is determined by R25.

Diode CR4, the step-recovery diode multiplier, converts the input sinusoidal signal to a stream of impulses. These impulses are fed to an unloaded microstrip quarter-wave resonator (L19), which is tuned to the desired output frequency.

C44 provides a DC block coupling to the 50 ohm input of output filter FL1. The output of the filter is loaded with a 3 dB attenuator, reducing the output power to that required by the first mixer and providing some control over the impedance seen by the filter. The undesired harmonic multiples of 200 MHz removed from the desired frequency are suppressed at least 40 dB. The output power is between +5 and +12 dBm.

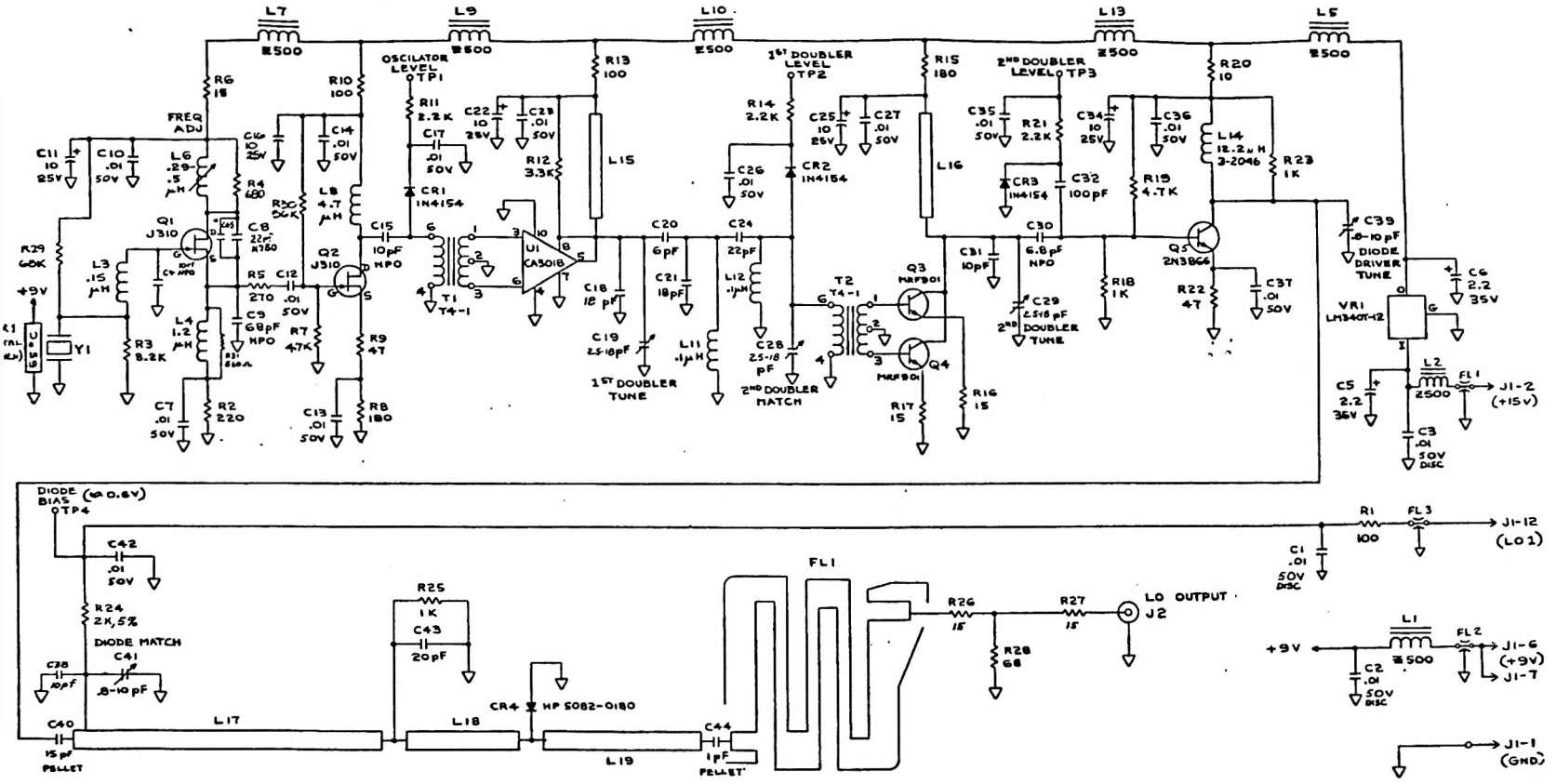

X5 MULTIPLIER

DWG. NO.	20D2828-1	20D2828-2	20D2828-3	20D2828-4	20D2828-5	20D2828-6
STOCK NO.	9301276	9301524	9301532	9301581	9301599	9301607
1 ST. LO FREQ	1020 MHz	1000 MHz	980 MHz	1010-1030 MHz	990-1010 MHz	980-990 MHz
C45	2.2pf NPO	4.7pf NPO	6.8pf NPO	2.2pf NPO	4.7 pF NPO	6.8pF NPO

NOTES:

1. UNLESS OTHERWISE SPECIFIED:
   RESISTORS ARE IN OHMS, 1/4W, 10%
   CAPACITORS ARE IN MICROFARADS
2. TRIM AND DRILL SID5944
3. COMPONENT LAYOUT 20D2828
4. L15 THRU L19 AND FL1 ARE FOIL OF THE P C BOARD

USED ON: PCL-606 XMTR & RCVR

Moseley

Schematic
940 - 960 MHz. 1st L.O.

TOL: FRACT. ± 1/32, .XX ± .030, .XXX ± .010, ∠ ± 1/2°

SCALE:

9107288 G

MOSELEY ASSOCIATES, INC.
111 CASTILIAN DRIVE
SANTA BARBARA, CA 93117-3093
(805) 968-9621

DATE: 1/16/87

PARENT ITEM: 9301276 DESCRIPTION: ASSY LO 1ST TX 940-960 PCL-606
ENG.DRAWING NO.: 2002828-1 R1

REF NBR	COMPONENT ITEM NBR	COMPONENT DESCRIPTION & COMMENTS	ENG.DRAWING NO.		QUANTITY PER	UM
1	3473063	PCB 1ST LO PCL-606	5105944	N	1.000	EA
2	2091148	ASSY MODULE COVER CKT 1ST LO	05C2899	A	1.000	EA
3	2091015	FRAME 1ST LO RCVR/XMTR PCL-606	05D2872	F	1.000	EA
4	2090967	FRAME BASE MODULE PCL-606	05C2867	E	1.000	EA
5	2091130	ASSY MODULE COVER COMP 1ST LO	05C2898	A	1.000	EA
6	4020467	FERROX CUBE 500 OHM L1,L2,L5,L7,L9,L10,L13	VK200 10/38		7.000	EA
7	4020509	IDCTR MINI-RED .15UH 10% L3	MR.15 10%		1.000	EA
8	4020590	IDCTR 1.2 UH 10% L4	9230-22		1.000	EA
9	4042057	IDCTR 10.5T BLK TYPE J L6	1171		1.000	EA
10	4020608	IDCTR MINI RED 4.7 UH L8	MR 4.7		1.000	EA
11	4020640	IDCTR MINI-RED .1 UH 5% L11,L12	MR .10 5%		2.000	EA
12	4010872	COIL AIR 2T #18 .30 LH L14	3-2046	C	1.000	EA
13	4100038	XFMR MCL T4-1 T1,T2	MCL T4-1		2.000	EA
14	3650074	RGLTR LM340T12/7812 VARV1.5A VR1	LM340T-12		1.000	EA
15	3350253	OVEN XTAL PCL 1-16-8-65 HR1	PCL1-16-8-65		1.000	EA
16	1230986	STOF 1/4 RND 6-32 X 7/8 AL	8160-A-0632		2.000	EA
17	3250495	SKT PIN .08500X.200L GOLD FIN Y1	450-3286-01-03		2.000	EA
18	3291051	FILTER FEED THRU LG THD FL1,FL2,FL3	859617-1		3.000	EA
19	3090230	CONN SMB PC RT ANG MALE BLKHD J2	2110-1511-000		1.000	EA
20	2300812	ASSY CABLE 950 1ST LO PCL-606	2481085	A	1.000	EA
21	3290152	JACK TEST WHITE R ANGLE TP1,TP2,TP3,TP4	430-101		4.000	EA
22	3730041	IC CA3018 XSTR ARRAY U1	CA-3018		1.000	EA
23	3640315	XT FET J310 Q1,Q2	J310		2.000	EA
24	3640273	XT MRF901 Q3,Q4	MRF 901		2.000	EA
25	3630175	XT NP2N3866 05W500M055V.4A Q5	2N3866		1.000	EA
26	2110005	HEATSINK TO 5-9 11-12 Q5	NF-204		1.000	EA

REF NBR	COMPONENT ITEM NBR	COMPONENT DESCRIPTION & COMMENTS	ENG.DRAWING NO.	QUANTITY PER	UM
27	3600145	DIO 1N4154 25V 4NS SI DO35 CR1,CR2,CR3	1N4154	3.000	EA
28	3610243	DIO 5082-0180 CR4	HP 5082-0180	1.000	EA
29	4310272	CAP .01 50V X7R 10% C7,C10,C12,C13,C14,C17,C23,C26,C27,C35,C36,C37, C42	5018EM50RD103K	13.000	EA
30	4280079	CAP TANT EPOX-DIP 10/25V 20% C11,C16,C22,C25,C34	196D106X0025KA1	5.000	EA
31	4280046	CAP TANT EPOX-DIP 2.2/35V 20% C5,C6	196D225X0035JA1	2.000	EA
32	4300125	CAP DISC N750 22PF 5% C8	DTN-22	1.000	EA
33	4300042	CAP DISC NPO 6.8PF C30	DTZ-6R8	1.000	EA
34	1050129	SCR PNH PHPS 4-40 X 1/4 SST		2.000	EA
35	1310093	CLIP PCL-606	05C2882 B	16.000	EA
36	4410478	RES 68K OHM 1/4W 10% R29	RC07GF683K	1.000	EA
37	4300133	CAP DISC NPO 22PF 5% C24	DTZ-22	1.000	EA
38	4300067	CAP DISC NPO 10PF 5% C4,C15,C31	DTZ-10	3.000	EA
39	4300182	CAP DISC NPO 68PF 5% C9	DTZ-68	1.000	EA
40	4350658	CAP CHIP 15PF 5% P90 C40	100B150JP500X	1.000	EA
41	4210084	CAP MICA DIP 18PF 5% C18	DM-15-180J	1.000	EA
42	4200069	CAP MICA DIP 100PF 5% C32	DM-5-101J	1.000	EA
43	4200010	CAP MICA DIP 6PF +/- 0.5 C20	DM-5-060D	1.000	EA
44	4200127	CAP MICA DIP 18 PF 5% C21	DM-5-180J	1.000	EA
45	4370342	CAP VAR 2.5-18PF C19,C28,C29	GX818000	3.000	EA
46	4350393	CAP CHIP 1 PF +/-.1PF P90 C44	100B1R0BP500X	1.000	EA
47	4240024	CAP GL 10PF 5% C38	GY01-100J	1.000	EA
48	4240040	CAP GL 20PF 5% C43	GY01-200J	1.000	EA
49	4370201	CAP MIN VAR PC .8-10PC C39,C41	MVM010W	2.000	EA
50	4310132	CAP DISC .01/50V C1,C2,C3	UK-50-103	3.000	EA
51	4410122	RES 100 OHM 1/4W 10% R1,R10,R13	RC07GF101K	3.000	EA
52	4410163	RES 220 OHM 1/4W 10% R2	RC07GF221K	1.000	EA

REF NBR	COMPONENT ITEM NBR	COMPONENT DESCRIPTION & COMMENTS	ENG.DRAWING NO.	QUANTITY PER	UM
53	4410361	RES 8.2K OHM 1/4W 10% R3	RC07GF822K	1.000	EA
54	4410460	RES 56K OHM 1/4W 10% R30	RC07GF563K	1.000	EA
55	4410171	RES 270 OHM 1/4W 10% R5	RC07GF271K	1.000	EA
56	4410031	RES 15 OHM 1/4W 10% R6,R16,R17,R26,R27	RC07GF150K	5.000	EA
57	4410155	RES 180 OHM 1/4W 10% R8,R15	RC07GF181K	2.000	EA
58	4410080	RES 47 OHM 1/4W 10% R9,R22	RC07GF470K	2.000	EA
59	4410288	RES 2.2K OHM 1/4W 10% R11,R14,R21	RC07GF222K	3.000	EA
60	4410304	RES 3.3K OHM 1/4W 10% R12	RC07GF332K	1.000	EA
61	4410247	RES 1K OHM 1/4W 10% R18,R23,R25	RC07GF102K	3.000	EA
62	4410338	RES 4.7K OHM 1/4W 10% R7,R19	RC07GF472K	2.000	EA
63	1090182	SCR PNH PHPS 6-32 X 1/4 SST VR1		5.000	EA
64	4410221	RES 680 OHM 1/4W 10% R4	RC07GF681K	1.000	EA
65	4410106	RES 68 OHM 1/4W 10% R28	RC07GF680K	1.000	EA
66	4410023	RES 10 OHM 1/4W 10% R20	RC07GF100K	1.000	EA
68	1090554	NUT HEX 6-32 SM PATT VR1		1.000	EA
69	1090588	WSHR LK #6 SR SST VR1		1.000	EA
70	1290186	SIL PAD VR1	7403-09-FR-51	1.000	EA
71	4410213	RES 560 OHM 1/4W 10% R31	RC07GF561K	1.000	EA
72	1130491	WSHR SST 5710-35-16	5710-35-16	1.000	EA
73	1641927	W BUSS 22GA	298	.300	FT
74	3340791	XTAL 51.000 MHZ PCL-606 TX Y1	30A0079-1 D	1.000	EA
75	4300018	CAP DISC NPO 2.2PF C45	DTZ-2R2	1.000	EA
76	4401042	RES 2K OHM 1/4W 5% R24	RC07GF202J	1.000	EA

RF AMPLIFIER

Schematic 91C7379
Assembly 20D2937
Parts List 20D2937

The RF Amplifier module is a three-stage power amplifier designed to produce 6 watts nominal output power over the 890-960 MHz band when driven with a +16 dBm nominal input signal. The heart of the module is a high gain UHF power amplifier hybrid device (AR1) that exhibits excellent stability and ruggedness. AR1 provides 22 dB of adjustable gain that is factory-set in the transmitter for 6 watts by adjustment of R1. Field adjustment of R1 is not recommended since other design considerations will be compromised (i.e., DC power consumption, temperature stability, efficiency, etc.). CAUTION: INPUT POWER MUST BE LIMITED TO +19 dBm (80 mW) OR PERMANENT DAMAGE TO THE MODULE MAY RESULT.

The final stage current monitor sample is derived across R2 plus any additional line losses to provide 0.2 volt/amp sensitivity. This sample is fed to the Transmitter Control Board for conditioning and then routed to the Metering and Status Board for front panel indication at the PA Current position. Normal indications should be .8-1.2 amp as read on the meter bottom scale.

The seven-section low-pass filter following AR1 is realized in a semi-lumped configuration utilizing microstripline inductors, open-circuited stubs and lumped capacitors C8 and C9. The filter attenuates the second and third harmonic emissions to better than -60 dBc per FCC requirements.

The dual-directional coupler is fabricated using stripline technology to provide high-directivity, therefore assuring accurate forward and reflected power sampling. Detectors CR1 and CR2 provide DC meter samples for reflected and forward power, respectively. These sample voltages are fed to the Transmitter Control Board for conditioning and directed to the Meter and Status Board for front panel meter indications. Forward power indication is 0 dB for nominal 6 watts output. Reflected power indication is -10 dB for a well-matched load and 0 dB for an open or short circuit.

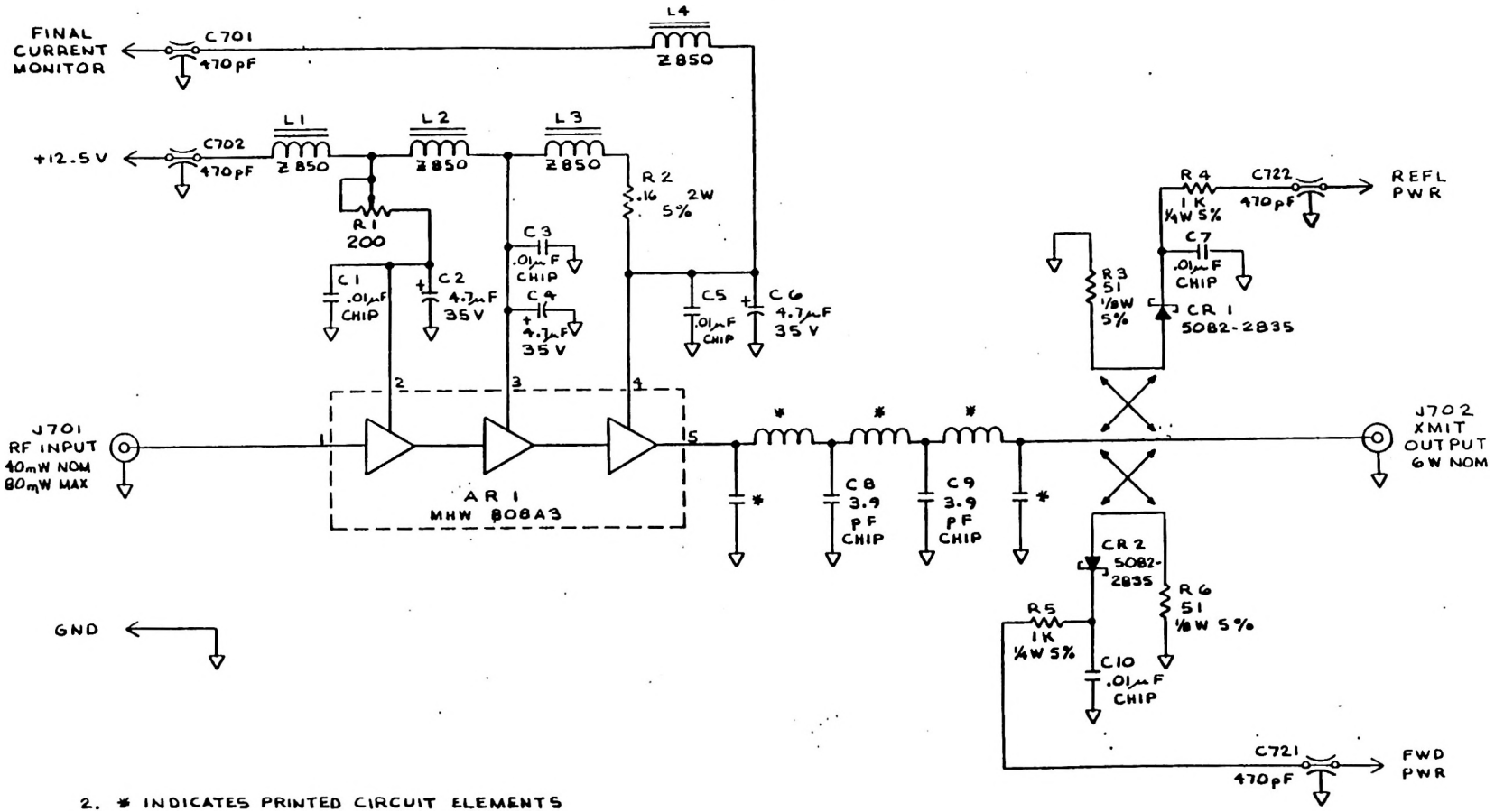

2. * INDICATES PRINTED CIRCUIT ELEMENTS

1. UNLESS OTHERWISE SPECIFIED:
RESISTOR VALUES ARE IN OHMS.

NOTES:

Moseley

Schematic
R.F.A. 960 MHz.

TOL: FRACT. ± 1/32, .XX ± .005, .XXX ± .005, ∠ ± 1/2°

DRAWN
CHK
ENG

SCALE:

91C7379 A

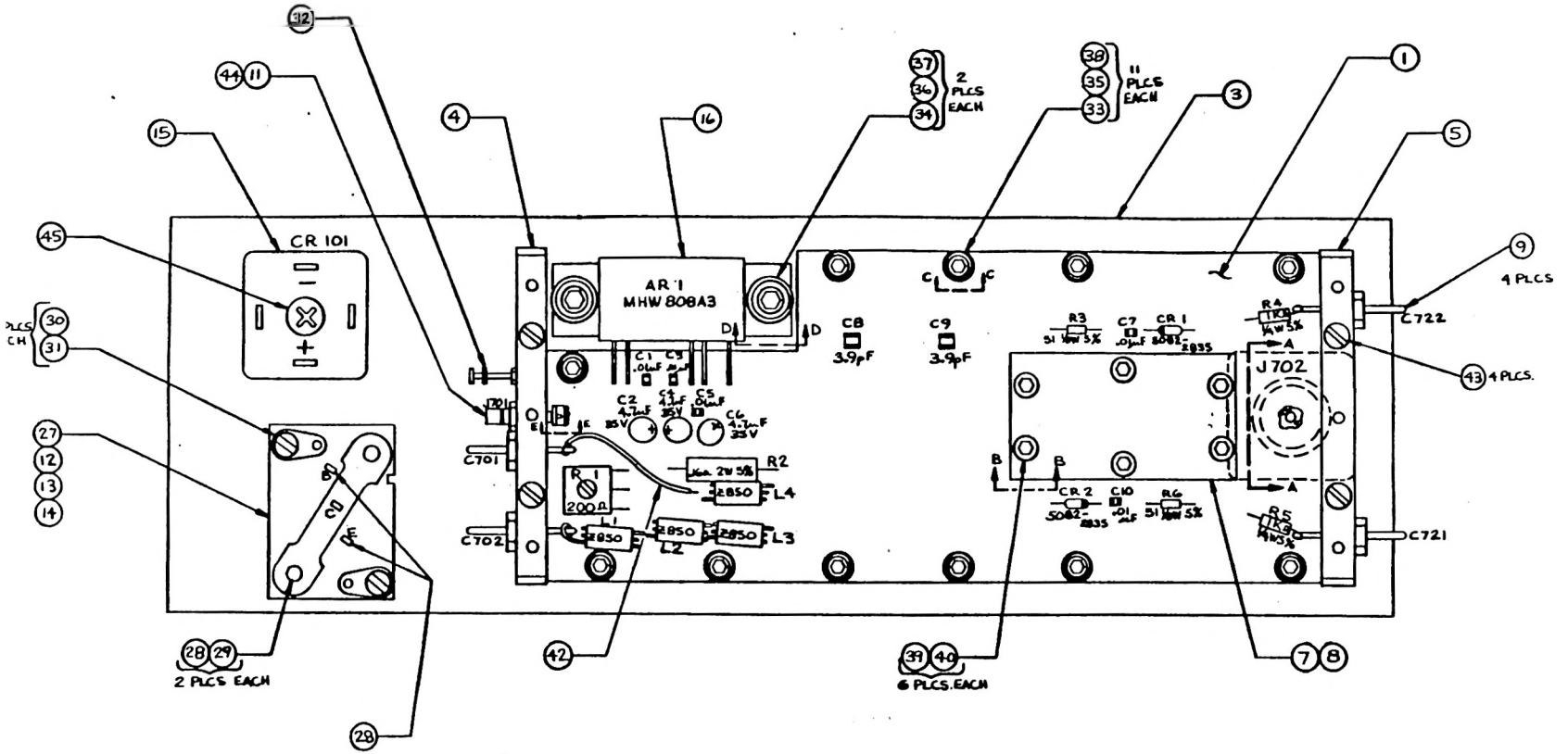

Moseley

Component Layout
R.F.A. 960 MHz.

TOL: FRACT. ± 1/32, .XX ± .030, .XXX ± .005, ∠ ± 1/2°

SCALE:

20D2937

A

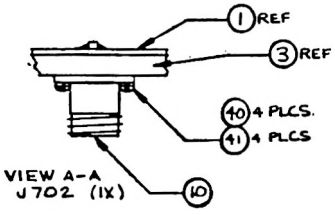

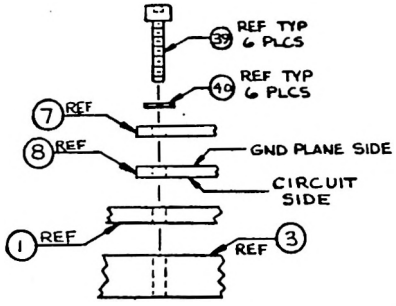

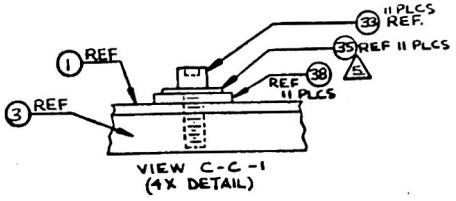

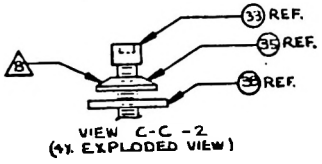

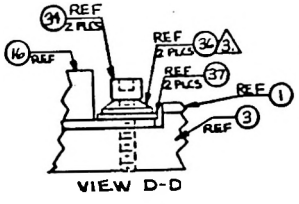

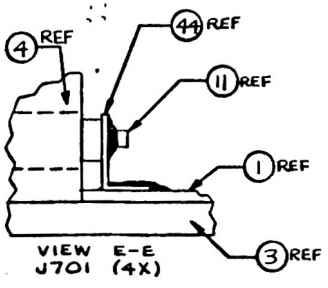

10. P.C. BOARD: 51C 6042
9. SCHEMATIC: 91C 7379

8. COMPRESSION WASHER (ITEM 35) TO BE INSTALLED WITH LARGE DIAMETER AGAINST FLATWASHER (ITEM 38).

7. STAMPED PART NUMBER ON ITEM 7 TO BE VISIBLE, FACING UP.

6. INSTALL ITEM 7 AND 8 BEFORE MOUNTING COMPONENTS.

5. ITEM 35 TO BE FULLY COMPRESSED AFTER TIGHTENING.

4. USE SILVER BEARING SOLDER SN62 PER QQS571 ON ALL SURFACE MOUNTED COMPONENTS.

3. AR 1 (ITEM 16) TO BE INSTALLED WITH HARDWARE (ITEMS 34, 36, 37) AS IN VIEW D-D. HARDWARE TO BE FINGER TIGHT IN AT LEAST FOUR SEQUENTIAL STEPS. TIGHTEN TO 5 IN. LBS. ALTERNATING BETWEEN SCREWS IN AT LEAST FOUR SEQUENTIAL STEPS.

2. APPLY HEAT SINK COMPOUND (DOW-CORNING #340) TO AREA COMPLETELY UNDER AR 1 (ITEM 16).

1. AREA UNDER AR 1 (ITEM 16) TO BE FREE OF PARTICLES BEFORE APPLICATION OF HEAT SINK COMPOUND.

MUSELEY ASSOCIATES, INC.
111 CASTILIAN DRIVE
SANTA BARBARA, CA 93117-3093
(805) 968-9621

DATE: 1/19/87

PARENT ITEM: 9302035 DESCRIPTION: ASSY RFA 960 MHZ
ENG.DRAWING NO.: 2002937 A

REF NBR	COMPONENT ITEM NBR	COMPONENT DESCRIPTION & COMMENTS	ENG.DRAWING NO.		QUANTITY PER	UM
1	3473824	PCB RFA 950 MHZ	51C6042	B	1.000	EA
2	2091957	COVER ENCL RFA	0583118	B	1.000	EA
3	2110335	HEATSINK RFA 960 MHZ	0503120	C	1.000	EA
4	2091965	PLATE INPUT ENCL RFA	0583119	B	1.000	EA
5	2091981	PLATE OUTPUT ENCL RFA	0583149	B	1.000	EA
6	2350767	ASSY HARNESS RFA 960 MHZ	29C1064	A	1.000	EA
7	2091973	PLATE COVER DIR COUPLER	0583121	A	1.000	EA
8	3473832	PCB DIRECTIONAL COUPLER	51B6049	A	1.000	EA
9	4350070	CAP FD THRU 470PF 20% C701,C702,C721,C722	54-804-002-471M		4.000	EA
10	3030178	CONN TYPE N RCPT 1/8 DIA HOLES J702	UG-58 A/U		1.000	EA
11	3030400	CONN SMB BLKHD STR ML SLDR POT J701	2019-1511-000		1.000	EA
12	3650363	RGLTR VARV 5.0A TO3 VR1	LM338-K-STEEL		1.000	EA
13	1290162	SIL PAD VR1	7403-09-FR-05		1.000	EA
14	1250190	COVER INSULATING TO-3 VR1	A22-2003		1.000	EA
15	3610284	DIO BRIDGE 100V/25A CR101	MDA2501		1.000	EA
16	3731189	IC HI GAIN RF PWR AMP AR1	MHW808A3		1.000	EA
17	3610045	DIO 5082-2835 FAST CR1,CR2	5082-2835		2.000	EA
18	4020368	FERROX-CUBE 850 OHM L1,L2,L3,L4	VK 200 20/4B		4.000	EA
19	4250046	CAP TANT EPOX-DIP 2.2/35V 20% C15,C16	196D225X0035JA1		2.000	EA
20	4280053	CAP TANT EPOX-DIP 4.7/35V 10% C2,C4,C6	196D475X0035JA1		3.000	EA
21	4350898	CAP CHIP 3.9PF +/-.25PF P90 C8,C9	100B3R9CP500X		2.000	EA
22	4350161	CAP .01UF CHIP C1,C3,C5,C7,C10	W100BF103MP		5.000	EA
23	4630018	POT CER PC PIN 200 OHM .5W R1	3386R-1-201		1.000	EA
24	4590022	RES .16 OHM 2W 5% R2	SWH .16 2W 5%		1.000	EA
25	4460143	RES 1K OHM 1/4W 5% R4,R5	RC07GF102J		2.000	EA
26	4450037	RESISTOR 51 OHM 1/8W 5% R3,R6	RC05GF510J		2.000	EA
27	3250214	SKT XSTR/LAM	LST2202-2		1.000	EA

REF NBR	COMPONENT ITEM NBR	COMPONENT DESCRIPTION & COMMENTS	ENG.DRAWING NO.	QUANTITY PER	UM
28	1090638	BSHG MS-10 NYL #6	851547F002	4.000	EA
29	1090471	SCR PNH PHPS #6 X 1/2 TYP B		2.000	EA
30	1050103	SCR PNH PHPS 4-40 X 3/16 SS		2.000	EA
31	1050798	LOG LKG #4 PREFORMED	T-233	2.000	EA
32	3290582	TERM	1300T 4.5	1.000	EA
33	1050574	SCR SCH 4-40 X 3/8 SST		11.000	EA
34	1090539	SCR SCH 8-32 X 3/8 SST		2.000	EA
35	1050889	WASHER, BELLEVILLE, CONICAL#4	5808-73-20	11.000	EA
36	1090851	WSHR BELLEVILLE CONICAL #6	5808-87-25	2.000	EA
37	1090804	WSHR FL #6 CD PL	AN960-6 CAD 1	2.000	EA
38	1050840	WSHR FL #4 CD PL	MW-401	11.000	EA
39	1050871	SCR SCH CAP 4-40 X 7/16		6.000	EA
40	1050832	WSHR LK #4 SR CD PL		10.000	EA
41	1050129	SCR PNH PHPS 4-40 X 1/4 SST		14.000	EA
42	1640416	W STRD 22GA YELLOW	BU-730-22#4	.250	FT
43	1050525	SCR FLH SLTD 4-40 X 1 SST		4.000	EA
44	2003675	BRACKET MTG	610	1.000	EA
45	1130129	SCR PNH PHPS 8-32 X 3/4 SST		1.000	EA
46	1580234	TOG TEFLON 22AWG NAT	TFT200-22	.080	FT

METERING AND STATUS

Schematic 91D7264
Parts List 20D2818-2 & -5

The transmitter Metering and Status board includes three main sections:

1. Eight separate metering functions
2. Power supply and operating status indicators
3. RADIATE/STANDBY switch

Metering Functions

Potentiometers R1 though R8 are used as input adjustments. Resistors R31 through R38 have been selected to increase the allowable input voltage. The values selected are explained in note 4 on the schematic.

U4 acts as a switch to select one of the eight metering channels. The selected channel is based on a binary code produced by U2, which is an up/down counter. U2 is incremented and decremented by METER FUNCTION switch S1, U3, and associated circuitry.

U1 decodes the output of the counter and, by activating one of eight LEDs, indicates the position selected.

The output of U4 (the multiplex switch) is buffered and amplified by U7. The output of this buffer is used by half of U5 to indicate the polarity of the input signal (red equals plus, and green equals minus). The output of U7 also drives the absolute value amplifier.

Figure 5-1 is a simplified diagram of the absolute value amplifier. It is included to show the difference in gain between a negative and positive input. The values shown in parentheses are for a typical full-scale input. The output of the absolute amplifier is connected to U5, the meter ballistics amplifier.

U5 acts as an attenuator and meter acceleration amplifier. R9 is used to adjust the meter ballistics response. The output of this circuit is connected to the meter through J1.

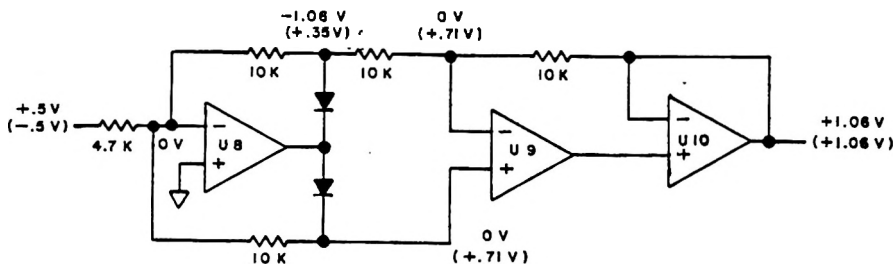

Figure 5-1. Simplified diagram of absolute value amplifier.

Status Indicators

LEDs CR21 through CR24 are used to indicate the status of the power supplies. CR17 and CR18 indicate the status of the transmitter. U11 is used as a TTL threshold detector. R97 and R101 set the threshold at approximately 2 volts referred to the input. U12 and associated circuitry are not presently used.

Control Switch

RADIATE/STANDBY switch S2 is a double-pole, double-throw switch used to activate logic circuits within the Transmitter and is connected through the harness to rear panel connector A10-J1-C for remote indication of the RADIATE/STANDBY mode.

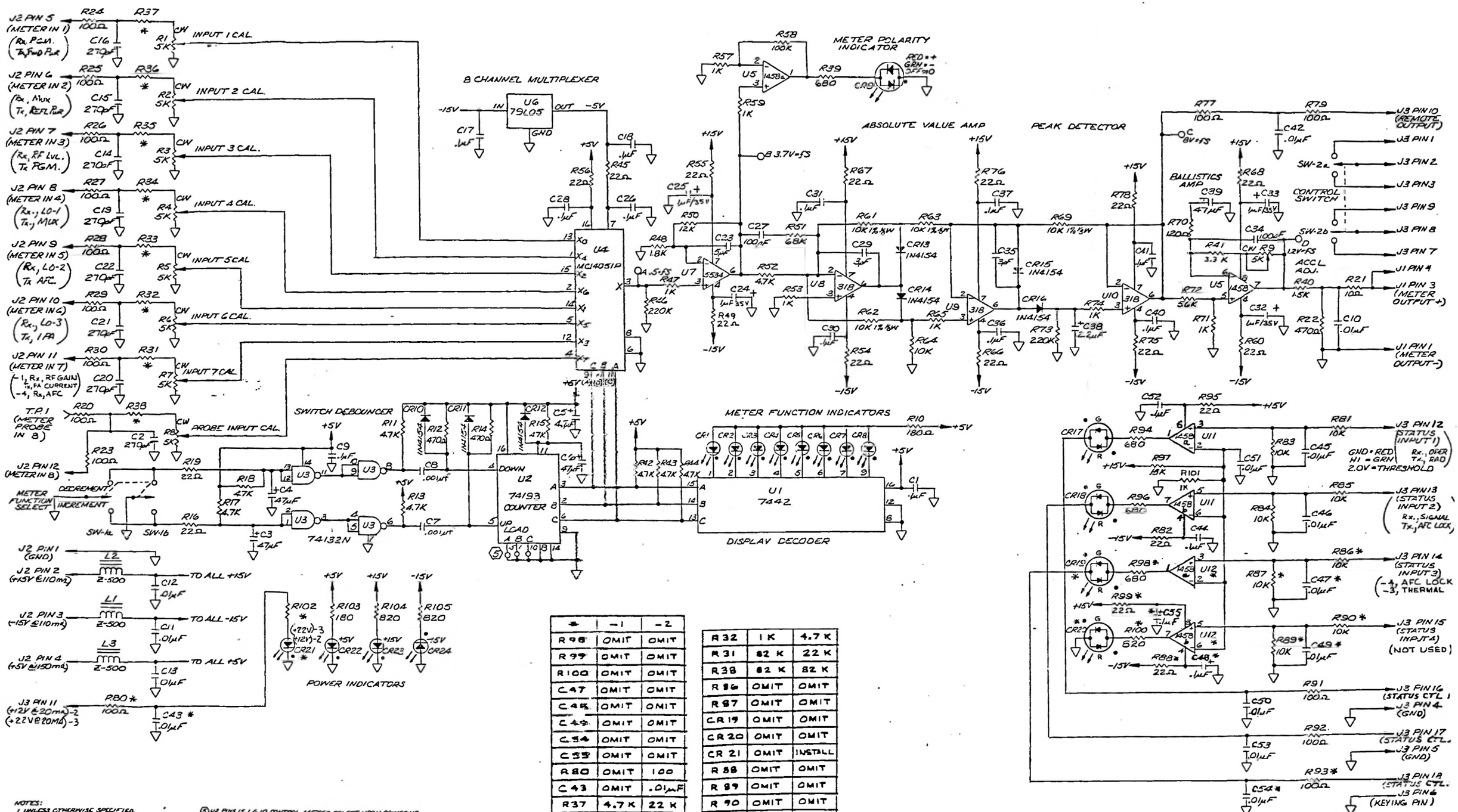

*	-1	-2
R98	OMIT	OMIT
R99	OMIT	OMIT
R100	OMIT	OMIT
C47	OMIT	OMIT
C45	OMIT	OMIT
C49	OMIT	OMIT
C54	OMIT	OMIT
C55	OMIT	OMIT
R80	OMIT	100
C43	OMIT	.01µF
R37	4.7 K	22 K
R36	4.7 K	22 K
R35	22 K	4.7 K
R34	1 K	4.7 K
R33	1 K	22 K

R32	1 K	4.7 K
R31	82 K	22 K
R38	82 K	82 K
R86	OMIT	OMIT
R87	OMIT	OMIT
CR19	OMIT	OMIT
CR20	OMIT	OMIT
CR 21	OMIT	INSTALL
R88	OMIT	OMIT
R89	OMIT	OMIT
R90	OMIT	OMIT
SW-2	ON MOMENTARY	ON MOMENTARY ON
U12	OMIT	OMIT
R102	OMIT	560
R93	OMIT	OMIT

-2	320/450 MHZ, 960 MHZ XMTR
-1	960 MHZ, 450-471 GHZ RCVR
VERSION	USE

NOTES:
1. UNLESS OTHERWISE SPECIFIED, ALL RESISTOR VALUES ARE 1/4W 10%, ALL CAPACITOR VALUES ARE IN MICROFARADS.
2. PC BOARD 31D5334
3. COMPONENT LAYOUT 20D2818
4. R31 THRU R38 VALUES ARE BASED ON THE FOLLOWING DESIGN CRITERIA:
   FULL SCALE RANGE
   1V TO 3.2V — R = 4.7K
   3.2V TO 10V — R = 22K
   10V TO 32V — R = 82K
5. U2 PINS 15, 1 & 10 CONTROL METER SELECT UPON POWER UP AS WIRED, INPUT 1 WILL BE SELECTED. IF ANOTHER INPUT IS PREFERRED DRILL HOLES OR CUT TRACES PER CHART BELOW:

INPUT SELECT	1	2	3	4	5	6	7	8
CUT TRACE	NONE	15	1	1&15	10	10&15	1&10	1,10&15

6. ALL DIAGNOSTIC VOLTAGES ARE ± 20%

Moseley

Schematic
Metering & Status Board

91D7264 K

MOSELEY ASSOCIATES, INC.
111 CASTILIAN DRIVE
SANTA BARBARA, CA 93117-3093
(805) 968-9621

DATE: 1/19/87

PARENT ITEM: 9204199 DESCRIPTION: ASSY. MTRNG & STATUS TX PCL-606
ENG.DRAWING NO.: 2002818-02 S

REF NBR	COMPONENT ITEM NBR	COMPONENT DESCRIPTION & COMMENTS	ENG.DRAWING NO.	QUANTITY PER	UM
1	9205006	SUBASSY NEUTER MTRG/STAT BD	2002818-05 S	1.000	EA
2	4410411	RES 22K OHM 1/4W 10% R31,R33,R36,R37	RC07GF223K	4.000	EA
3	4410336	RES 4.7K OHM 1/4W 10% R32,R34,R35	RC07GF472K	3.000	EA
4	4410486	RES 82K OHM 1/4W 10% R38	RC07GF823K	1.000	EA
5	3390614	LED GRN 7-12020 DIFFUSED 75DEG CR21	HLMP-3507	1.000	EA
6	3390606	LED HOUSE P-C-LITE CR21HSG	PCR 740 CTP	1.000	EA
7	3190774	SW DPDT ON NONE ON 577 2112 SW2	0601-201	1.000	EA
8	4410213	RES 560 OHM 1/4W 10% R102	RC07GF561K	1.000	EA
9	4410122	RES 100 OHM 1/4W 10% R80	RC07GF101K	1.000	EA
10	4310272	CAP .01 50V X7R 10% C43	5018EM50RD103K	1.000	EA

MOSELEY ASSOCIATES, INC.
111 CASTILIAN DRIVE
SANTA BARBARA, CA 93117-3093
(805) 968-9621

DATE: 1/19/87

PARENT ITEM: 9205006 DESCRIPTION: SUBASSY NEUTER MTRG/STAT BD
ENG.DRAWING NO.: 2002818-05 S

REF NBR	COMPONENT ITEM NBR	COMPONENT DESCRIPTION & COMMENTS	ENG.DRAWING NO.	QUANTITY PER	UM
1	3473048	PCB METERING & STATUS PCL-606	5105934 E	1.000	EA
3	3730173	IC LM318N OPAMP HISPEED U8,U9,U10	LM-318N	3.000	EA
4	3730215	IC LM1458N OPAMP DUAL U5,U11	LM-1458N	2.000	EA
5	3660206	IC SN7442N BCD-DECIMAL U1	SN7442N	1.000	EA
6	3660420	IC SN74132N QU 2IN NAND ST U3	SN74132N	1.000	EA
7	3660602	IC SN74193N BINUPDWNC02CLCK U2	SN74193N	1.000	EA
8	3660139	IC MC14051P 8CH MUX R280 7V U4	MC14051P	1.000	EA
9	3650132	RGLTR MC79L05 05V 0.1A TO92 U6	MC79L05 ACP	1.000	EA
10	3730728	IC NE5534AN OPAMP LO NOISE U7	NE-5534AN	1.000	EA
11	3250016	SKT DUAL IN LINE 8 PIN U5,U7,U8,U9,U10,U11	640463-1	6.000	EA
12	3250024	SKT DUAL IN LINE 14 PIN U3	640357-1	1.000	EA
13	3250032	SKT DUAL IN LINE 16 PIN U1,U2,U4	640358-1	3.000	EA
17	4410023	RES 10 OHM 1/4W 10% R21	RC07GF100K	1.000	EA
18	4410049	RES 22 OHM 1/4W 10% R16,R19,R45,R49,R54,R55,R56,R60,R65,R67,R68,R75, R76,R78,R82,R95	RC07GF220K	16.000	EA
19	4410122	RES 100 OHM 1/4W 10% R20,R23,R24,R25,R26,R27,R28,R29,R30,R77,R79,R91, R92	RC07GF101K	13.000	EA
20	4410130	RES 120 OHM 1/4W 10% R70	RC07GF121K	1.000	EA
21	4410155	RES 180 OHM 1/4W 10% R10,R103	RC07GF181K	2.000	EA
22	4410205	RES 470 OHM 1/4W 10% R12,R14,R22	RC07GF471K	3.000	EA
24	4410239	RES 820 OHM 1/4W 10% R104,R105	RC07GF821K	2.000	EA
25	4410247	RES 1K OHM 1/4W 10% R47,R53,R57,R59,R65,R71,R74,R101	RC07GF102K	8.000	EA
26	4410262	RES 1.5K OHM 1/4W 10% R40	RC07GF152K	1.000	EA
27	4410270	RES 1.8K OHM 1/4W 10% R48	RC07GF182K	1.000	EA

REF NBR	COMPONENT ITEM NBR	COMPONENT DESCRIPTION & COMMENTS	ENG.DRAWING NO.	QUANTITY PER	UM
28	4410387	RES 12K OHM 1/4W 10% R50	RC07GF123K	1.000	EA
29	4410338	RES 4.7K OHM 1/4W 10% R11,R13,R15,R17,R18,R42,R43,R44,R52	RC07GF472K	9.000	EA
30	4410346	RES 5.6K OHM 1/4W 10% R72	RC07GF562K	1.000	EA
31	4410379	RES 10K OHM 1/4W 10% R64,R81,R83,R84,R85	RC07GF103K	5.000	EA
32	4410395	RES 15K OHM 1/4W 10% R97	RC07GF153K	1.000	EA
33	4410476	RES 68K OHM 1/4W 10% R51	RC07GF683K	1.000	EA
34	4410494	RES 100K OHM 1/4W 10% R58	RC07GF104K	1.000	EA
35	4410536	RES 220K OHM 1/4W 10% R46,R73	RC07GF224K	2.000	EA
36	4410304	RES 3.3K OHM 1/4W 10% R41	RC07GF332K	1.000	EA
38	4630729	POT CER PC PIN 5K OHM .75W 20T R1,R2,R3,R4,R5,R6,R7,R8,R9	43P502T000	9.000	EA
39	4510145	RES 10.0K OHM 1/8W 1% R61,R62,R63,R69	RN55C1002F	4.000	EA
40	4210035	CAP MICA DIP 3PF +/- 0.5 C29,C35	DM-15-030D	2.000	EA
41	4210043	CAP MICA DIP 5PF +/- 0.5 C23	DM-15-050D	1.000	EA
42	4210266	CAP MICA DIP 100PF 5% C27,C34	DM-15-101J	2.000	EA
43	4310074	CAP DISC CER 270PF C2,C14,C15,C16,C19,C20,C21,C22	DD-271	8.000	EA
44	4310272	CAP .01 50V X7R 10% C10,C11,C12,C13,C42,C45,C46,C50,C51,C53	5018EM50RD103K	10.000	EA
45	4310264	CAP .1 50V Z5U 20% C1,C9,C17,C18,C26,C28,C30,C31,C36,C37,C40,C41, C44,C52	5020ES50RD104M	14.000	EA
46	4280038	CAP TANT EPOX-DIP 1/35V 20% C24,C25,C32,C33	196D105X0035HA1	4.000	EA
47	4280046	CAP TANT EPOX-DIP 2.2/35V 20% C38	196D225X0035JA1	1.000	EA
48	4280053	CAP TANT EPOX-DIP 4.7/35V 10% C5	196D475X0035JA1	1.000	EA
49	4280137	CAP TANT EPOX-DIP 47/20V C3,C4,C6,C39	196D476X0020PE4	4.000	EA
50	4310280	CAP .001 100V C7,C8	C315C102MIR5CA	2.000	EA
51	3600145	DIO 1N4154 25V 4NS SI DO35 CR10,CR11,CR12,CR13,CR14,CR15,CR16	1N4154	7.000	EA
52	3390614	LED GRN 7-12@20 DIFFUSED 750EG CR1,CR2,CR3,CR4,CR5,CR6,CR7,CR8,CR22,CR23,CR24	HLMP-3507	11.000	EA
53	3390598	LED DUAL CR17,CR18	521-9177	2.000	EA

REF NBR	COMPONENT ITEM NBR	COMPONENT DESCRIPTION & COMMENTS	ENG.DRAWING NO.	QUANTITY PER	UM
54	3390580	LED DUAL (90) CR9	550-3006	1.000	EA
55	3390606	LED HOUSE P-C-LITE CR1,CR2,CR3,CR4,CR5,CR6,CR7,CR8,CR17,CR18,CR22, CR23,CR24	PCR 740 CTP	13.000	EA
56	3190758	SW DPDT (ON)-NONE-(ON) SW1	0601-210	1.000	EA
60	4020467	FERROX CUBE 500 OHM L1,L2,L3	VK200 10/38	3.000	EA
62	3090347	CONN 4 PIN SNGL ROW RTANG HDR J1	87233-4	1.000	EA
63	3090222	CONN 12PIN SNGL ROW RTANG HDR J2	1-87233-2	1.000	EA
64	3090255	CONN 18PIN SNGL ROW RTANG HDR J3	1-87233-8	1.000	EA
65	3290152	JACK TEST WHITE R ANGLE TP1	430-101	1.000	EA
67	4410221	RES 680 OHM 1/4W 10% R39,R94,R96	RC07GF681K	3.000	EA

TRANSMITTER CONTROL

Schematic 91D7285
Parts List 20C2834

The Transmitter Control board is divided into three main functional sections:

1. Radiate control logic

2. Final power amplifier (PA) current signal conditioner

3. Metering buffer amplifiers

Radiate Control Logic

The transmitter radiate control logic consists of Q1, U1 and their associated circuitry. This circuit will allow the transmitter to radiate when the following conditions are simultaneously met:

1. The front panel RADIATE/STANDBY switch is in the RADIATE position Or the front panel RADIATE/STANDBY switch is in the STANDBY position and pin D of the back panel remote connector (A10-J1) is at ground potential. Either condition will appear as a ground potential on J1 pin 18 on the Transmitter Control board.

2. The AFC lock signal from the FMO Synthesizer module is greater than +2 V. This will appear as +2 V or more on J1 pin 17 on the Transmitter Control board.

3. Pin K of the back panel remote connector (A10-J1) is floating (not connected to ground). This will appear as +5V on J3 pin 11 on the Transmitter Control board.

When all of the above input conditions occur, the output of U1 will go from +0.4 V to +5 V. This signal appears on J1 pin 13. The signal is sent to the +12.5 V power supply, enabling it to supply power to the intermediate power amplifier (IPA) and RF amplifier (RFA) and thus allowing the transmitter to radiate. The output from U1 also appears on J1 pin 12 and is used to control the front panel RADIATE status indicator.

PA Current Signal Conditioner

Differential amplifier U4 and associated circuitry condition and amplify the PA current sample to give a front panel meter indication of final power amplifier current. The voltage drop appearing across PA current sampling resistor R705 (in the RF Amplifier module) is presented to the Transmitter Control board on J2 pins 3 and 4. The voltage between TP2 and TP3, as measured with a floating voltmeter, will be 0.1 V for each Ampere of current drawn by the final PA transistor. This voltage contains a +12.5 V common mode component which is removed by the differential amplifier. The differential component is amplified and sent to the Metering and Status module from J1 pin 11.

Metering Buffer Amplifiers

The forward power sample from the RF Amplifier enters the Transmitter Control board on J2 pin 2 and is amplified by the first section of U2. The output of U2 pin 7 is fed to J1 pin 10 for front panel meter display. This output also drives two buffer amplifiers (the second section of U2 and the first section of U3) for remote metering and hot standby purposes. These outputs appear on J3 pins 7 and 12.

The second section of U3 is used to buffer the FMO Synthesizer AFC signal for a remote meter. The input to this amplifier is from J1 pin 8, and the amplifier output is sent to J3 pin 4.

The reflected power sample from the RF Amplifier enters this module on J2 pin 1 and is amplified by the second section of U4. The output is sent to J1 pin 9 for front panel meter display.

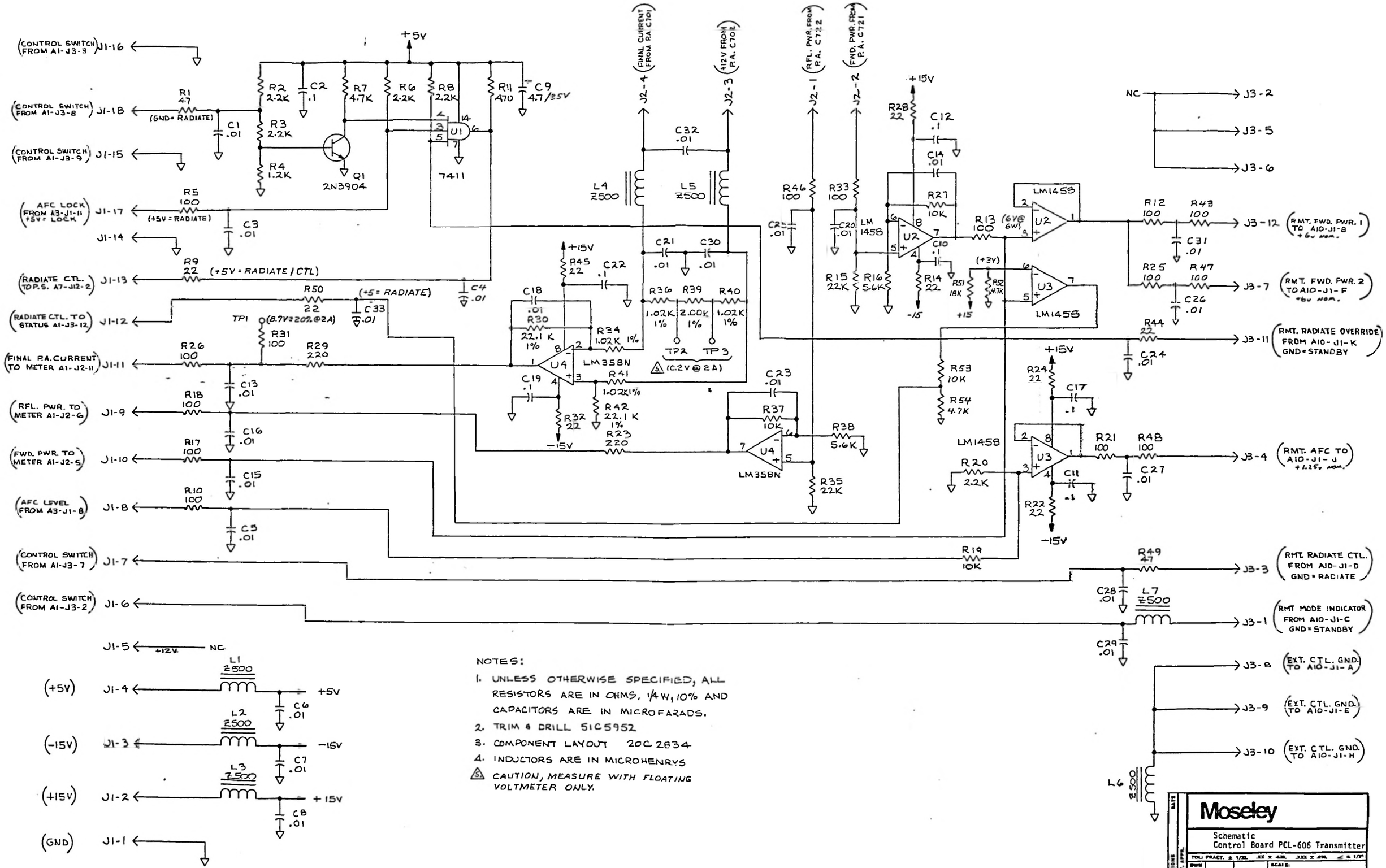

NOTES:

1. UNLESS OTHERWISE SPECIFIED, ALL RESISTORS ARE IN OHMS, 1/4 W, 10% AND CAPACITORS ARE IN MICROFARADS.
2. TRIM & DRILL 51C5952
3. COMPONENT LAYOUT 20C2834
4. INDUCTORS ARE IN MICROHENRYS

⚠5 CAUTION, MEASURE WITH FLOATING VOLTMETER ONLY.

MOSELEY ASSOCIATES, INC.
111 CASTILIAN DRIVE
SANTA BARBARA, CA 93117-3093
(805) 968-9621

DATE: 1/19/87

PARENT ITEM: 9204215 DESCRIPTION: ASSY XMTR CONTROL
ENG.DRAWING NO.: 20C2834 G1

REF NBR	COMPONENT ITEM NBR	COMPONENT DESCRIPTION & COMMENTS	ENG.DRAWING NO.	QUANTITY PER	UM
1	3473121	PCB XMTR CONTROL ASSY	51C5952 F	1.000	EA
2	3090297	CONN 18 PIN SNGL ROW STR HDR J1	1-87224-8	1.000	EA
3	3090347	CONN 4 PIN SNGL ROW RTANG HDR J2	87233-4	1.000	EA
4	3090222	CONN 12PIN SNGL ROW RTANG HDR J3	1-87233-2	1.000	EA
5	3250024	SKT DUAL IN LINE 14 PIN U1	640357-1	1.000	EA
6	3250016	SKT DUAL IN LINE 8 PIN U2,U3,U4	640463-1	3.000	EA
7	3661139	IC,TRIPLE 3-INPUT AND GATE U1	DM7411N	1.000	EA
8	3730215	IC LM1458N OPAMP DUAL U2,U3	LM-1458N	2.000	EA
9	3730983	IC LM358N U4	LM358N	1.000	EA
10	3630456	XT 2N3904 Q1	2N3904	1.000	EA
12	4020467	FERROX CUBE 500 OHM L1,L2,L3,L4,L5,L6,L7	VK200 10/3B	7.000	EA
13	4310272	CAP .01 50V X7R 10% C1,C3,C4,C5,C6,C7,C8,C13,C14,C15,C16,C18,C20, C21,C23,C24,C25,C26,C27,C28,C29,C30,C31,C32,C33	5018EM50R0103K	25.000	EA
14	4310264	CAP .1 50V Z5U 20% C2,C10,C11,C12,C17,C19,C22	5020ES50R0104M	7.000	EA
15	4280053	CAP TANT EPOX-DIP 4.7/35V 10% C9	196D475X0035JA1	1.000	EA
17	4410122	RES 100 OHM 1/4W 10% R5,R10,R12,R13,R17,R18,R21,R25,R26,R31,R33,R43, R46,R47,R48	RC07GF101K	15.000	EA
18	4410049	RES 22 OHM 1/4W 10% R9,R14,R22,R24,R28,R32,R44,R45,R50	RC07GF220K	9.000	EA
19	4410205	RES 470 OHM 1/4W 10% R11	RC07GF471K	1.000	EA
20	4410254	RES 1.2K OHM 1/4W 10% R4	RC07GF122K	1.000	EA
21	4410233	RES 2.2K OHM 1/4W 10% R2,R3,R6,R8,R20	RC07GF222K	5.000	EA
22	4410336	RES 4.7K OHM 1/4W 10% R7,R52,R54	RC07GF472K	3.000	EA
23	4410379	RES 10K OHM 1/4W 10% R19,R27,R37,R53	RC07GF103K	4.000	EA
24	4410411	RES 22K OHM 1/4W 10% R15,R35	RC07GF223K	2.000	EA

REF NBR	COMPONENT ITEM NBR	COMPONENT DESCRIPTION & COMMENTS	ENG.DRAWING NO.	QUANTITY PER	UM
25	4410346	RES 5.6K OHM 1/4W 10% R16,R38	RC07GF562K	2.000	EA
26	4410080	RES 47 OHM 1/4W 10% R1,R49	RC07GF470K	2.000	EA
27	4510061	RES 1.02K 1/8W 1% R34,R36,R40,R41	RN55C1021F	4.000	EA
28	4510186	RES 22.1K OHM 1/8W 1% R30,R42	RN55C2212F	2.000	EA
29	4510293	RES 2.00K OHM 1/8W 1% R39	RN55C2001F	1.000	EA
30	4410163	RES 220 OHM 1/4W 10% R23,R29	RC07GF221K	2.000	EA
31	4410403	RES 18K OHM 1/4W 10% R51	RC07GF182K	1.000	EA
32	3290152	JACK TEST WHITE R ANGLE TP1,TP2,TP3	430-101	3.000	EA

TRANSMITTER POWER SUPPLY

Schematic 91C7350
Parts List 21C2825
20C2817-1

The Transmitter Power Supply module consists of an ac power connector, transformer, rectifiers, capacitive filters, and series pass regulators. The power supply has four output voltages: +15, -15, +5, and +12.5 V. Each is regulated by a series IC regulator. All except the +12.5 V regulator are fixed. The 12.5 V output is adjustable and is factory set to 12.5 V. The 12.5 V output may be reduced to 1.5 V or less by reducing the voltage at pin 12 from its normal level of +5 V to zero. This will occur if the AFC loses lock or if the RADIATE/STANDBY switch is turned to STANDBY.

CAUTION

Failure to ground the third lead of the input power cord may result in hazardous shocks to personnel.

The ac power connector includes an RF filter. The transformer primary windings can be wired one of four different ways, which allows the user to select one of the four input voltage ranges listed below:

Nominal Voltage (rms)	Minimum Voltage (rms)	Maximum Voltage (rms)	Line Fuse
100	90	110	2 A
120	108	132	2 A
220	198	242	1 A
240	216	264	1 A

The transformer has two primary windings which are placed in parallel for 120 Vac operation and in series for 240 Vac operation. One winding is tapped for 100 Vac or 220 Vac operation.

If the operating voltage is changed, change the fuse to agree with the above list.

The Power Supply module includes the rectifiers and regulators for the +15V, -15V, and +5 V supplies. The rectifier and regulator for the 12.5 V supply are mounted on the RF Amplifier heat sink. Note: R5 adjusts the output level of the +12.5 V supply; when the transmitter is radiating, this voltage should be between +12.3 and +12.7 volts for proper operation. J1 provides an unregulated +9 V used to power the crystal oven for the first LO crystal.

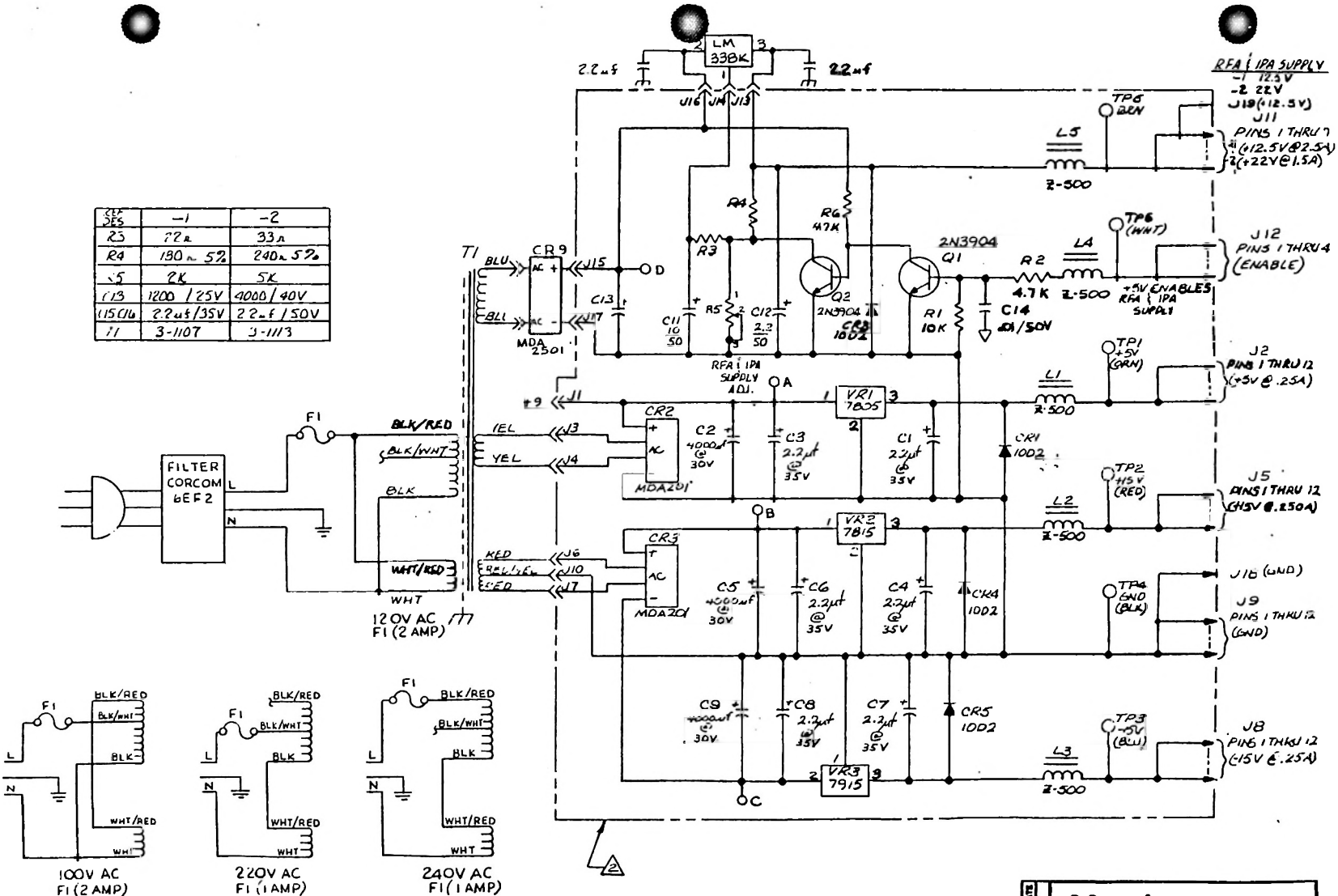

REF DES	-1	-2
R3	22Ω	33Ω
R4	180Ω 5%	240Ω 5%
R5	2K	5K
C13	1200 / 25V	4000 / 40V
C15 C16	2.2uf / 35V	2.2uf / 50V
T1	3-1107	3-1113

NOTES

1. PC BOARD LAYOUT 51C5933
2. COMPONENT LAYOUT 20C2817
3. ALL RESISTORS ¼W 10%, UNLESS OTHERWISE SPECIFIED.
4. C2, C5, AND C9 MAY BE 2900μF/40V OR 2700μF/40V
5. POINTS A, B, C, AND D ARE DIAGNOSTIC TEST POINTS

Moseley

Schematic
Power Supply

91C7350 A

MOSELEY ASSOCIATES, INC.
121 CASTILIAN DRIVE
SANTA BARBARA, CA 93117-3093
(805) 968-9621

DATE: 1/19/87

PARENT ITEM: 9104084 DESCRIPTION: TRANSFORMER ASSY XMTR
ENG.DRAWING NO.: 21C2825 B

REF NBR	COMPONENT ITEM NBR	COMPONENT DESCRIPTION & COMMENTS	ENG.DRAWING NO.	QUANTITY PER	UM
1	2032191	CHASSIS TRANSFORMER	05C3016 A	1.000	EA
3	3370053	CONN PWR w/FILTER 6EF2	6EF2	1.000	EA
4	4090445	XFMR 8-P-100 T1	3-1107 C	1.000	EA
6	1090208	SCR PNH PHPS 6-32 X 3/8 SST		4.000	EA
7	1090109	CLIP NUT 6/32	SL-210-06-2	4.000	EA
8	3110004	CONN FASTON .250IN CRIMP INSUL	2-35-0804-2	7.000	EA
10	3370111	FUSE 2 AMP FAST-BLO	AGC 2	1.000	EA
11	1560028	TBG SHRINK 1/8" CLEAR	FIT 221 1/8CL	.100	FT
12	1560069	TBG SHRINK 1/2" CLEAR	FIT 221 1/2CL	.150	FT
13	3370335	HLDR FUSE STD HKP	HKP	1.000	EA
14	1641455	W STRD 16GA BLACK 26/30	1557 BLACK	.250	FT
15	1560184	TBG TEFLON 12AWG NAT	TBG TEFLON12AWG	.125	FT
16	1560036	TBG SHRINK 3/16" CLEAR	FIT 221 3/16CL	.100	FT
17	1641505	W STRD 16GA GREEN 26/30	1557 GREEN	.125	FT
18	1090604	WSHR FL #6 CD PL	AN960-6 CAD 1	4.000	EA
19	1050152	SCR PND PHPS 4-40 X 3/8 SST		2.000	EA
20	1050582	NUT HEX 4-40 SM PATT SST		2.000	EA
21	1050624	WSHR LK #4 INTL T CD PL		2.000	EA
22	3430071	LBL HIGH VOLTAGE SYMBOL	10A1058-2 A0	1.000	EA

MOSELEY ASSOCIATES, INC.
111 CASTILIAN DRIVE
SANTA BARBARA, CA 93117-3093
(805) 968-9621

DATE: 1/19/87

PARENT ITEM: 9203597 DESCRIPTION: ASSY XMTR PCL-606
ENG.DRAWING NO.: 20C2817-1 U

REF NOR	COMPONENT ITEM NBR	COMPONENT DESCRIPTION & COMMENTS	ENG.DRAWING NO.	QUANTITY PER	UM
2	3472743	PCB POWER SUPPLY TR S PCL-606	51C5933 H	1.000	EA
3	4270047	CAP PWR LYTIC 4000/30V C2,C5,C9	36DX402G030AA2A	3.000	EA
4	4350682	CAP LYTIC 7200/30V C13	31D68A722U030BP	1.000	EA
5	4280046	CAP TANT EPOX-DIP 2.2/35V 20% C1,C3,C4,C6,C7,C8	196D225X0035JA1	6.000	EA
6	4260244	CAP TANT EPOX-DIP 10/50V C11	T368C106M050AS	1.000	EA
7	4310132	CAP DISC .01/50V C14	UK-50-103	1.000	EA
8	4280251	CAP TANT EPOX-DIP 2.2/50V C12	T368D225M050AS	1.000	EA
9	4410379	RES 10K OHM 1/4W 10% R1	RC07GF103K	1.000	EA
10	4030745	POT CER PC PIN 2K OHM .5W 25T R5	54W202	1.000	EA
11	4460820	RES 180 OHM 1/4W 5% R4	RC07GF181J	1.000	EA
12	4410338	RES 4.7K OHM 1/4W 10% R2,R6	RC07GF472K	2.000	EA
13	4410049	RES 22 OHM 1/4W 10% R3	RC07GF220K	1.000	EA
14	3610003	DIO 1002 200V 1A SI DO39 CR1,CR4,CR5,CR8	1002	4.000	EA
16	3610078	DIO BRIDGE 100V 2A CR2,CR3	MDA-201	2.000	EA
18	3630456	XT 2N3904 Q1,Q2	2N3904	2.000	EA
19	4020467	FERROX CUBE 500 OHM L1,L2,L3,L4,L5	VK200 10/3B	5.000	EA
20	3290830	LUG GND J1,J3,J4,J6,J7,J10,J13,J14,J15,J16,J17,J18,J19	836	13.000	EA
21	3290020	TEST PT BLK VERT TP4	105-0853-001	1.000	EA
22	3290037	TEST PT BLUE VERT TP3	105-0860-001	1.000	EA
23	3290046	TEST PT RED VERT TP2	105-0852-001	1.000	EA
24	3290111	TEST PT WHITE VERT TP6	105-0851-001	1.000	EA
25	3290053	TEST PT ORANGE VERT TP1	105-0856-001	1.000	EA
26	3290036	TEST PT BROWN VERT TP5	105-0858-001	1.000	EA

REF NBR	COMPONENT ITEM NBR	COMPONENT DESCRIPTION & COMMENTS	ENG.DRAWING NO.	QUANTITY PER	UM
27	1290188	SIL PAD VR1,VR2,VR3	7403-09-FR-51	3.000	EA
28	2110278	HEATSINK VR1,VR2,VR3	60348-TT	3.000	EA
29	3090271	CONN 12PIN SNGL ROW STR HDR J5,J8,J9	1-87224-2	3.000	EA
30	1050129	SCR PNH PHPS 4-40 X 1/4 SST VR1,VR2		2.000	EA
31	1050590	NUT HEX 4-40 1/4 FLATS SST VR1,VR2		2.000	EA
33	3650223	RGLTR UA79150C 15V 1.5A TO220 VR3	79150C	1.000	EA
34	3650173	RGLTR UA7805UC 05V 1.0A TO220 VR1	UA7805UC	1.000	EA
35	3650207	RGLTR UA7815UC 15V 1.5A TO220 VR2	7815UC	1.000	EA
36	3090396	CONN 4 PIN SNGL ROW STR HDR J12	87224-4	1.000	EA
37	3090578	CONN STRAIGHT SIN ROW 8 PIN J2,J11	65502-108	2.000	EA
38	1090554	NUT HEX 6-32 SM PATT VR3		1.000	EA
39	1090455	SCR PNH SLTD 6-32 X 1/4 NYL VR3		1.000	EA
40	1050624	WSHR LK #4 INTL T CD PL VR1,VR2		2.000	EA
42	1150010	SCR BDH SLTD 10-32 X 1/4 C2,C5,C9,C13		8.000	EA
43	1150127	WSHR LK #10 INTL T C2,C5,C9,C13		8.000	EA

PRESELECTOR FILTER

Schematic (N/A)
Parts List 20C2826

The signal received the antenna is passed to a bandpass filter, the preselector filter. This filter is tuned to the STL band at 940 to 960 MHz. Signals out of band are rejected by at least 70 dB.

The preselector filter is a five-element, interdigital bandpass filter with a maximum insertion loss of 1.5 dB. The ripple bandwidth is 20 MHz centered on 950 MHz. The filter prototype is a five-element Chebyscheff, 0.1 dB ripple, lowpass filter.

MUSELEY ASSOCIATES, INC.
111 CASTILIAN DRIVE
SANTA BARBARA, CA 93117-3093
(805) 968-9621

DATE: 1/19/87

PARENT ITEM: 9301250 DESCRIPTION: SUBASSY 950 PRESEL PCL-606
ENG.DRAWING NO.: 20C2826 F

REF NBR	COMPONENT ITEM NBR	COMPONENT DESCRIPTION & COMMENTS	ENG.DRAWING NO.		QUANTITY PER	UM
1	2031789	ENCL BACK PRESELECTOR PCL-606	0582782	E	1.000	EA
2	2010874	ENCL FRONT PRESELCTOR PCL-606	0582781	D	1.000	EA
3	2031797	ENCL SIDE PRESELECTOR PCL-606	0582783	D	2.000	EA
4	2090819	COVER PRESELECTOR PCL-606	0582780	C	2.000	EA
5	2062461	ROD PRESELECTOR PCL-606	05A2784	B0	3.000	EA
6	4350377	CAPACITIVE TUNING ELEMENT	6927-0SL		5.000	EA
7	3030400	CONN SMB BLKHD STR ML SLDR POT	2019-1511-000		2.000	EA
8	1641919	W BUSS 20GA	297		.125	FT
9	1050129	SCR PNH PHPS 4-40 X 1/4 SST			28.000	EA
10	1050178	SCR PNH PHPS 4-40 X 7/16 SST			9.000	EA
11	2062537	ROD DRILLED PRESELECT PCL-606	05A2816	C	2.000	EA
12	1050624	WSHR LK #4 INTL T CD PL			5.000	EA

PREAMPLIFIER AND FIRST MIXER

Schematic 91D7274
Parts List 20D2827

The Preamplifier and First Mixer module has been designed to provide optimum service in the most hostile RF environments. A PIN diode attenuator, the preamplifier, the first mixer, and the first IF preamplifier have been integrated into the module. The input signal is attenuated and then split by a hybrid coupler, amplified, and recombined. The amplified signal is converted down by a double balanced mixer to the first IF frequency of 70 MHz.

The input signal is applied to a PIN diode attenuator normally set to minimum attenuation. This low-pass (0.5 dB) input attenuator can optionally reduce the input signal at least 15 dB in very high level RF environments.

The signal is split by a 3 dB 90 hybrid coupler. The two outputs are amplified by the preamplifier, which consists of low-noise amplifiers Q3 and Q4. These amplifiers are input matched for best noise figure. They are actively biased by Q2 and Q5 to maintain close control over quiescent conditions.

The amplified outputs are recombined in the second hybrid coupler and then fed through a noise filter to the first mixer (U1). The signal is mixed with the 1020 MHz first LO signal to produce the first IF signal at 70 MHz. The image frequency is reactively terminated by a shunt stub.

The output of the mixer is applied to IF preamplifier Q1, which is also matched for best noise performance. The input characteristics of this device provide a low VSWR termination of the mixer at the IF frequency. The amplified IF signal is bandpass filtered and impedance matched to the 50 ohm output.

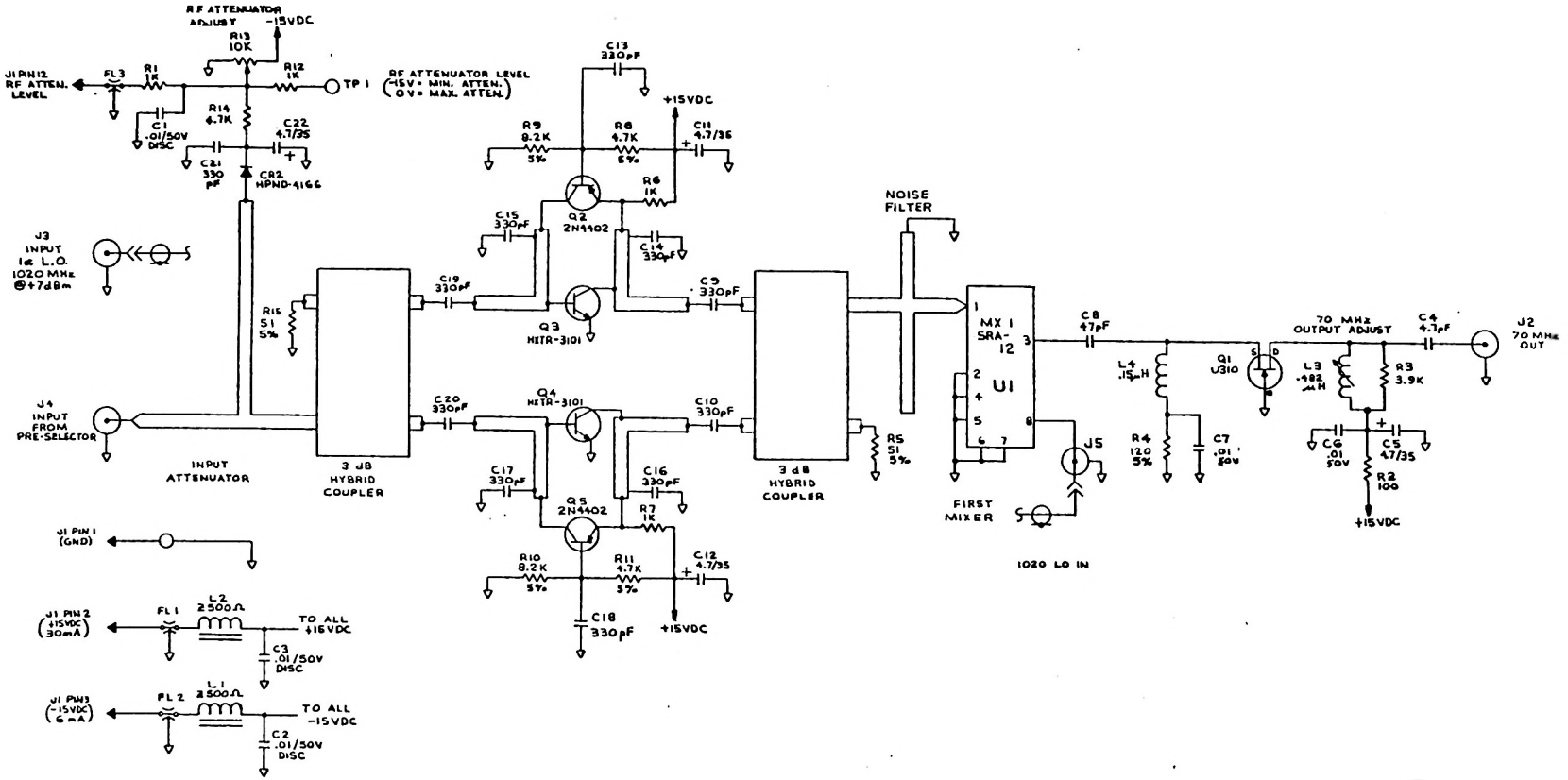

NOTES:

1. UNLESS OTHERWISE SPECIFIED:
   RESISTOR VALUES ARE IN OHMS, 1/4 WATT, 10%
   CAPACITOR VALUES ARE IN MICROFARADS.
2. P.C. BOARD 5105943
3. COMPONENT LAYOUT 2005827

Moseley		
950 Pre-Amp & Mixer		
TOL: FRACT. ± 1/32, .XX ± .030, .XXX ± .005, ∠ ± 1/2°		
DRWN	SCALE:	
CHK	9107274	H
ENG		

MOSELEY ASSOCIATES, INC.
111 CASTILIAN DRIVE
SANTA BARBARA, CA 93117-3093
(805) 968-9621

DATE: 1/19/87

PARENT ITEM: 9301268 DESCRIPTION: ASSY PREAMP/1STMX 950MHZ PCL6
ENG.DRAWING NO.: 2002827 N

REF NBR	COMPONENT ITEM NBR	COMPONENT DESCRIPTION & COMMENTS	ENG.DRAWING NO.		QUANTITY PER	UM
1	3473055	PCB PREAMP/1ST MIXER PCL-606	5105943	H	1.000	EA
3	3350188	MIXER U1	SRA-12		1.000	EA
4	2300804	ASSY CABLE 950 PREAMP PCL-606	2481084	A	1.000	EA
5	3630225	XT PS2N4402 .35W150M040V.6A9P Q2,Q5	2N4402		2.000	EA
6	3640281	XT HXTR-3101 Q3,Q4	HXTR-3101		2.000	EA
7	3640307	XT U310 Q1	U310		1.000	EA
8	3610235	DIO HPND-4166 CR2	HPND-4166		1.000	EA
9	3291069	FILTER FEED THRU SM THD FL1,FL2,FL3	859619-1		3.000	EA
10	4042065	IDCTR .482 UH 8.5T GR TYPE E L3	T7-116 8.5T3/8E		1.000	EA
11	4020509	IDCTR MINI-RED .15UH 10% L4	MR.15 10%		1.000	EA
12	4020407	FERROX CUBE 500 OHM L1,L2	VK200 10/38		2.000	EA
13	4300034	CAP DISC NPO 4.7PF C4	DTZ-4R7		1.000	EA
14	4350526	CAP CHIP 330PF 5% P90 C9,C10,C13,C14,C15,C16,C17,C18,C19,C20,C21	1008331JP500X		11.000	EA
15	4310132	CAP DISC .01/50V C1,C2,C3	UK-50-103		3.000	EA
16	4260053	CAP TANT EPOX-DIP 4.7/35V 10% C5,C11,C12,C22	196D475X0035JA1		4.000	EA
17	4210183	CAP MICA DIP 47PF 5% C6	DM-15-470J		1.000	EA
18	4310272	CAP .01 50V X7R 10% C8,C7	5018EM50RD103K		2.000	EA
19	4630299	POT CER PC PIN 10K OHM .75W R13	3006P-1-103		1.000	EA
20	1130491	WSHR SST 5710-35-16	5710-35-16		2.000	EA
21	4410247	RES 1K OHM 1/4W 10% R1,R6,R7,R12	RC07GF102K		4.000	EA
22	4460035	RES 51 OHM 1/4W 5% R5,R15	RC07GF510J		2.000	EA
23	4460291	RES 8.2K OHM 1/4W 5% R9,R10	RC07GF822J		2.000	EA
24	4460242	RES 4.7K OHM 1/4W 5% R8,R11,R14	RC07GF472J		3.000	EA
25.	4460055	RES 120 OHM 1/4W 5% R4	RC07GF121J		1.000	EA

REF NBR	COMPONENT ITEM NBR	COMPONENT DESCRIPTION & COMMENTS	ENG.DRAWING NO.		QUANTITY PER	UM
26	4410122	RES 100 OHM 1/4W 10% R2	RC07GF101K		1.000	EA
27	4410320	RES 3.9K OHM 1/4W 10% R3	RC07GF392K		1.000	EA
28	1050129	SCR PNH PHPS 4-40 X 1/4 SST			2.000	EA
29	1310093	CLIP PCL-606	05C2882	B	16.000	EA
30	3090230	CONN SMB PC RT ANG MALE BLKHD J2,J4	2110-1511-000		2.000	EA
31	2202315	ASSY COAXSMB PC/RTSMB/RT 12.25 J3-J5	24B1092-1	A1	1.000	EA
32	1560226	TBG TEFLON 20AWG NAT R1,L1,L2	TFT200-20		.250	FT
33	3290152	JACK TEST WHITE R ANGLE TP1	430-101		1.000	EA
34	2091403	COVER MODULE PREAMP/1ST MIX	05C2939	A1	2.000	EA
37	2091049	FRAME PREAMP/MIXER RX PCL-606	05D2875	F	1.000	EA
38	2090967	FRAME BASE MODULE PCL-606	05C2867	E	1.000	EA

FIRST LOCAL OSCILLATOR AND MULTIPLIER

Schematic 91D7288
Parts List 20D2828

The output LO signal is derived from a crystal-controlled oscillator, which uses an oven-mounted crystal for frequency stability. The signal is buffered and then quadrupled by a pair of active push-push doublers. Filtering is provided between each multiplication to remove unwanted harmonics. The signal is amplified and fed to a step-recovery diode multiplier, and the output is filtered to select the desired harmonic. The signal is then attenuated to control the output impedance to reduce the power to the level required by the mixer.

On-board power supply regulation eliminates frequency drifts due to line voltage variations.

The output local oscillator signal is derived from crystal-controlled oscillator Q1. The third overtone crystal is temperature stabilized by a 65 degree C proportionally controlled oven. The output frequency is adjustable by tuning FREQ ADJ L6; this adjustment causes only small output amplitude variations. Oscillator buffer Q2 isolates the oscillator, preventing frequency pulling when adjusting the multipliers.

The output of the buffer is doubled in an active push-push doubler. The single-ended input from the buffer is split into two out-of-phase voltages in T1 and fed to the bases of two transistors of integrated array U2. The output of these two transistors is summed at their collectors. The close matching of the integrated transistors provides suppression of the fundamental signal driving the bases. The fundamental frequency is further suppressed by an interstage bandpass filter consisting of L15, C18 to C21, L11, C24, L12 and C28.

The second doubler consists of Q3 and Q4. The circuit is essentially the same as the first doubler, but a discrete-component design is used because of the higher frequency and power that are required.

The output of the second doubler is amplified by Q5 to the power level (120 mW) required by the diode multiplier. The output of Q5 is tuned by C39 and impedance matched in two stages to the step-recovery diode multiplier by C38, C41, and L17, and then by C43 and L18. The diode self-bias current is determined by R25.

Diode CR4, the step-recovery diode multiplier, converts the input sinusoidal signal to a stream of impulses. These impulses are fed to an unloaded microstrip quarter-wave resonator (L19), which is tuned to the desired output frequency.

C44 provides a DC block and coupling to the 50 ohm input of output filter FL1. The output of the filter is loaded with a 3 dB attenuator, reducing the output power to that required by the first mixer and providing some control over the impedance seen by the filter. The undesired harmonic multiples of 200 MHz removed from the desired frequency are suppressed at least 40 dB. The output power is between +5 and +12 dBm.

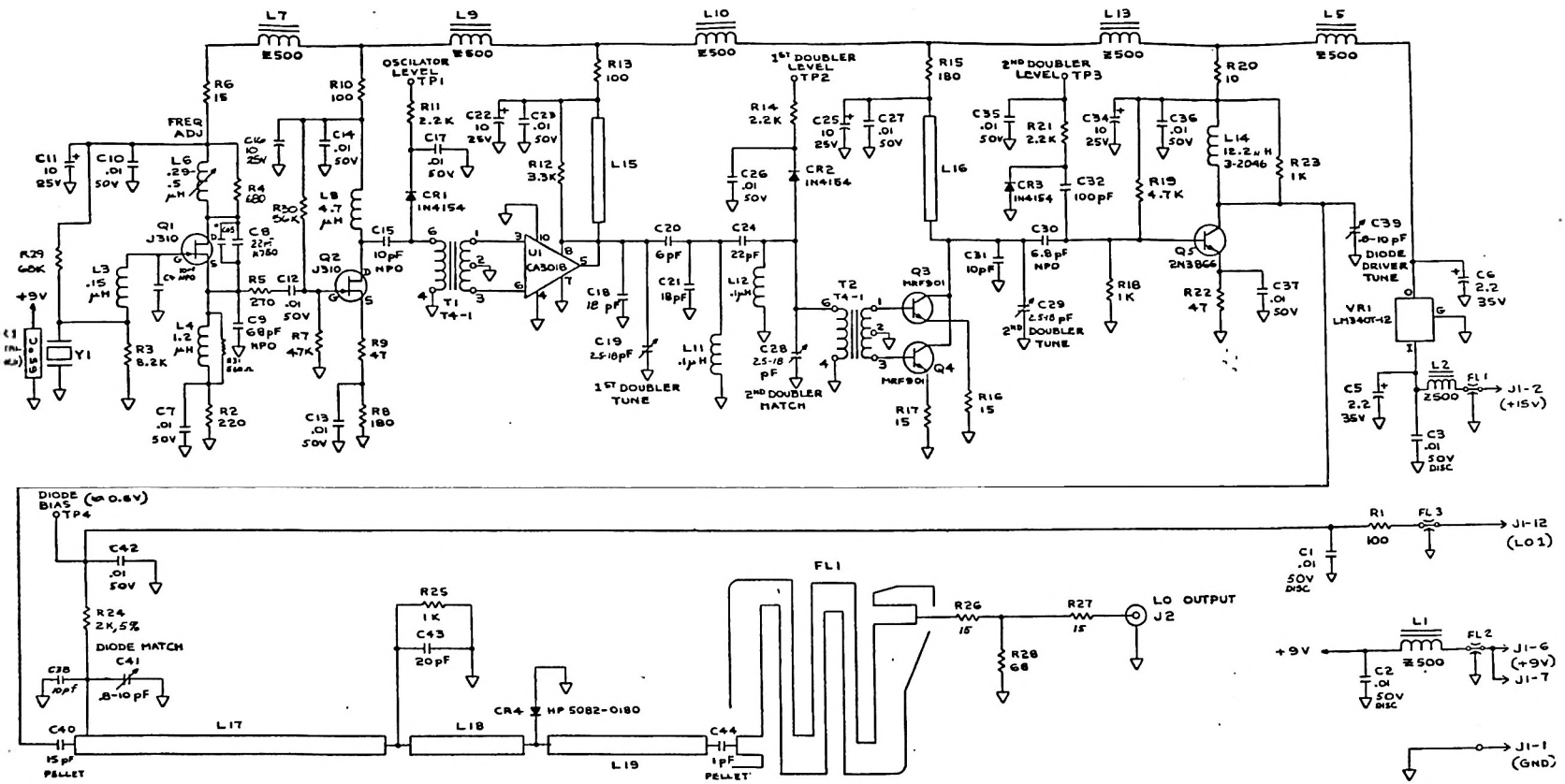

X5 MULTIPLIER

DWG. NO	20D2828-1	20D2828-2	20D2828-3	20D2828-4	20D2828-5	20D2828-6
STOCK NO.	9301274	9301524	9301532	9301581	9301599	9301607
1ST. LO FREQ	1020 MHz	1000 MHz	980 MHz	1010-1030 MHz	990-1010 MHz	980-990 MHz
C45	2.2pf NPO	4.7pf NPO	6.8pf NPO	2.2pf NPO	4.7 pF NPO	6.8 pF NPO

NOTES:

1. UNLESS OTHERWISE SPECIFIED:
   RESISTORS ARE IN OHMS, 1/4 W, 10%
   CAPACITORS ARE IN MICROFARADS
2. TRIM AND DRILL 5105944
3. COMPONENT LAYOUT 20D2828
4. L15 THRU L19 AND FL1 ARE FOIL OF THE P.C. BOARD

USED ON: PCL-606 XMTR & RCVR

Moseley

Schematic
940 - 960 MHz. 1st L.O.

TOL: FRACT. ± 1/32, .XX ± .03, .XXX ± .010, ∠ ± 1/2°

DWN | CHK | ENG | SCALE:

9107288 G

DATE | REVISIONS | MFG'T. APPR.

MOSELEY ASSOCIATES, INC.
111 CASTILIAN DRIVE
SANTA BARBARA, CA 93117-3093
(805) 968-9621

DATE: 1/16/87

PARENT ITEM: 9301276 DESCRIPTION: ASSY LO 1ST TX 940-960 PCL-606
ENG.DRAWING NO.: 20D2828-1 R1

REF NBR	COMPONENT ITEM NBR	COMPONENT DESCRIPTION & COMMENTS	ENG.DRAWING NO.		QUANTITY PER	UM
1	3473063	PCB 1ST LO PCL-606	51D5944	N	1.000	EA
2	2091148	ASSY MODULE COVER CKT 1ST LO	05C2899	A	1.000	EA
3	2091015	FRAME 1ST LO RCVR/XMTR PCL-606	05D2872	F	1.000	EA
4	2090967	FRAME BASE MODULE PCL-606	05C2867	E	1.000	EA
5	2091130	ASSY MODULE COVER COMP 1ST LO	05C2898	A	1.000	EA
6	4020467	FERROX CUBE 500 OHM L1,L2,L5,L7,L9,L10,L13	VK200 10/3B		7.000	EA
7	4020509	IDCTR MINI-RED .15UH 10% L3	MR.15 10%		1.000	EA
8	4020590	IDCTR 1.2 UH 10% L4	9230-22		1.000	EA
9	4042057	IDCTR 10.5T BLK TYPE J L5	1171		1.000	EA
10	4020608	IDCTR MINI RED 4.7 UH L6	MR 4.7		1.000	EA
11	4020640	IDCTR MINI-RED .1 UH 5% L11,L12	MR .10 5%		2.000	EA
12	4010872	COIL AIR 2T #18 .30 LH L14	3-2046	C	1.000	EA
13	4100038	XFMR MCL T4-1 T1,T2	MCL T4-1		2.000	EA
14	3650074	RGLTR LM340T12/7812 VARV1.5A VR1	LM340T-12		1.000	EA
15	3350253	OVEN XTAL PCL 1-16-8-65 HR1	PCL1-16-8-65		1.000	EA
16	1230986	STOF 1/4 RND 6-32 X 7/8 AL	8160-A-0632		2.000	EA
17	3250495	SKT PIN .0850DX.200L GOLD FIN Y1	450-3286-01-03		2.000	EA
18	3291051	FILTER FEED THRU LG THD FL1,FL2,FL3	859517-1		3.000	EA
19	3090230	CONN SMB PC RT ANG MALE BLKHD J2	2110-1511-000		1.000	EA
20	2300812	ASSY CABLE 950 1ST LO PCL-606	2481085	A	1.000	EA
21	3290152	JACK TEST WHITE R ANGLE TP1,TP2,TP3,TP4	430-101		4.000	EA
22	3730041	IC CA3018 XSTR ARRAY U1	CA-3018		1.000	EA
23	3640315	XT FET J310 Q1,Q2	J310		2.000	EA
24	3640273	XT MRF901 Q3,Q4	MRF 901		2.000	EA
25	3630175	XT NP2N3866 05W500M055V.4A Q5	2N3866		1.000	EA
26	2110005	HEATSINK TO 5-9 11-12 Q5	NF-204		1.000	EA

REF NBR	COMPONENT ITEM NBR	COMPONENT DESCRIPTION & COMMENTS	ENG.DRAWING NO.	QUANTITY PER	UM
27	3600145	DIO 1N4154 25V 4NS SI DO35 CR1,CR2,CR3	1N4154	3.000	EA
28	3610243	DIO 5082-0180 CR4	HP 5082-0180	1.000	EA
29	4310272	CAP .01 50V X7R 10% C7,C10,C12,C13,C14,C17,C23,C26,C27,C35,C36,C37, C42	5018EM50RD103K	13.000	EA
30	4280079	CAP TANT EPOX-DIP 10/25V 20% C11,C16,C22,C25,C34	196D106X0025KA1	5.000	EA
31	4260046	CAP TANT EPOX-DIP 2.2/35V 20% C5,C6	196D225X0035JA1	2.000	EA
32	4300125	CAP DISC N750 22PF 5% C8	DTN-22	1.000	EA
33	4300042	CAP DISC NPO 6.8PF C30	DTZ-6R8	1.000	EA
34	1050129	SCR PNH PHPS 4-40 X 1/4 SST		2.000	EA
35	1310093	CLIP PCL-606	05C2882 B	16.000	EA
36	4410476	RES 68K OHM 1/4W 10% R29	RC07GF683K	1.000	EA
37	4300133	CAP DISC NPO 22PF 5% C24	DTZ-22	1.000	EA
38	4300067	CAP DISC NPO 10PF 5% C4,C15,C31	DTZ-10	3.000	EA
39	4300182	CAP DISC NPO 68PF 5% C9	DTZ-68	1.000	EA
40	4350653	CAP CHIP 15PF 5% P90 C40	100B150JP500X	1.000	EA
41	4210084	CAP MICA DIP 18PF 5% C18	DM-15-180J	1.000	EA
42	4200069	CAP MICA DIP 100PF 5% C32	DM-5-101J	1.000	EA
43	4200010	CAP MICA DIP 6PF +/- 0.5 C20	DM-5-060D	1.000	EA
	4200127	CAP MICA DIP 18 PF 5% C21	DM-5-180J	1.000	EA
45	4370342	CAP VAR 2.5-18PF C19,C28,C29	GX618000	3.000	EA
46	4350393	CAP CHIP 1 PF +/-.1PF P90 C44	100B1R0BP500X	1.000	EA
47	4240024	CAP GL 10PF 5% C38	UY01-100J	1.000	EA
48	4240040	CAP GL 20PF 5% C43	UY01-200J	1.000	EA
49	4370201	CAP MIN VAR PC .8-10PC C39,C41	MVM010W	2.000	EA
50	4310132	CAP DISC .01/50V C1,C2,C3	UK-50-103	3.000	EA
51	4410122	RES 100 OHM 1/4W 10% R1,R10,R13	RC07GF101K	3.000	EA
52	4410163	RES 220 OHM 1/4W 10% R2	RC07GF221K	1.000	EA

REF NOR	COMPONENT ITEM NBR	COMPONENT DESCRIPTION & COMMENTS	ENG.DRAWING NO.	QUANTITY PER	UM
53	4410361	RES 8.2K OHM 1/4W 10% R3	RC07GF822K	1.000	EA
54	4410460	RES 56K OHM 1/4W 10% R30	RC07GF563K	1.000	EA
55	4410171	RES 270 OHM 1/4W 10% R5	RC07GF271K	1.000	EA
56	4410031	RES 15 OHM 1/4W 10% R6,R16,R17,R26,R27	RC07GF150K	5.000	EA
57	4410155	RES 180 OHM 1/4W 10% R8,R15	RC07GF181K	2.000	EA
58	4410080	RES 47 OHM 1/4W 10% R9,R22	RC07GF470K	2.000	EA
59	4410286	RES 2.2K OHM 1/4W 10% R11,R14,R21	RC07GF222K	3.000	EA
60	4410304	RES 3.3K OHM 1/4W 10% R12	RC07GF332K	1.000	EA
61	4410247	RES 1K OHM 1/4W 10% R18,R23,R25	RC07GF102K	3.000	EA
62	4410338	RES 4.7K OHM 1/4W 10% R7,R19	RC07GF472K	2.000	EA
63	1090182	SCR PNH PHPS 6-32 X 1/4 SST VR1		5.000	EA
64	4410221	RES 680 OHM 1/4W 10% R4	RC07GF681K	1.000	EA
65	4410106	RES 68 OHM 1/4W 10% R28	RC07GF680K	1.000	EA
66	4410023	RES 10 OHM 1/4W 10% R20	RC07GF100K	1.000	EA
68	1090554	NUT HEX 6-32 SM PATT VR1		1.000	EA
69	1090588	WSHR LK #6 SR SST VR1		1.000	EA
70	1290186	SIL PAD VR1	7403-09-FR-51	1.000	EA
71	4410213	RES 560 OHM 1/4W 10%	RC07GF561K	1.000	EA
72	1130491	WSHR SST 5710-35-16 R31	5710-35-16	1.000	EA
73	1641927	W BUSS 22GA	298	.300	FT
74	3340791	XTAL 31.000 MHZ PCL-606 TX Y1	30A0079-1 D	1.000	EA
75	4300018	CAP DISC NPO 2.2PF C45	DTZ-2R2	1.000	EA
76	4401042	RES 2K OHM 1/4W 5% R24	RC07GF202J	1.000	EA

DOUBLE CONVERTER

Schematic 91D7382
Parts List 20D2945-0 & -1

Most of the selectivity of the Receiver is provided by the 70 MHz to 3 MHz Double Converter module. The input signal at 70 MHz is amplified and bandpass filtered and then converted to the second IF frequency at 10.7 MHz. The bandwidth of the IF circuit is user selectable with jumpers E2 and E3 which select either a wide or narrow IF filter. This does not change the gain of the IF. The 10.7 MHz signal is converted to the third IF frequency at 3 mHz, bandpass filtered, and passed to the output.

After preamplification in the Preamplifier and First Mixer module, the input signal is amplified by Q1 to overcome the insertion loss of the 70 MHz bandpass filter. This amplifier also acts as an impedance transformer from the 50 ohm input impedance to the 3000 ohm impedance of the filter.

The primary purpose of the 70 MHz bandpass filter is to reduce undesired signals to levels that will not cause intermodulation in the second mixer and second IF amplifiers. The 1 dB bandwidth of this filter is 500 kHz, and its 10 dB bandwidth is 1.6 MHz. The output of the filter is impedance transformed down to 50 ohms to match the mixer.

The signal input to second mixer U1 is mixed with the 80.7 MHz second LO signal to produce the second IF signal at 10.7 MHz. The local oscillator signals are provided by the Second and Third Local Oscillator module.

The second mixer is double balanced, and its IF port (10.7 MHz) is diplexed. The low-pass leg (L8, C21, L10 with a 14 MHz cutoff) connects the signals centered on 10.7 MHz to the first 10.7 MHz amplifier (Q2). The high-pass leg (C20, L9, C19) terminates higher frequency signals in R4.

The output of the first 10.7 MHz amplifier (Q2) is buffered by emitter follower Q3. The source impedance required by filter FL1 is set by R10.

The 10.7 MHz IF filters FL1, FL2, and FL3 are linear phase monolithic ceramic resonators. L13 and C31, L19 and C49, and L14 and C37 allow slight adjustment of the center frequency of the filters to align both filters on the IF frequency. Amplifiers U2 and U3 maintain the signal level through the filters. Inductor L15 and capacitor C43 form a harmonic and noise filter for the third mixer.

The input to third mixer U4 is mixed with the 13.7 MHz third LO signal to produce the third IF signal at 3 MHz. The third mixer is also double balanced and diplexed. The output signal is sent to the FM Demodulator module.

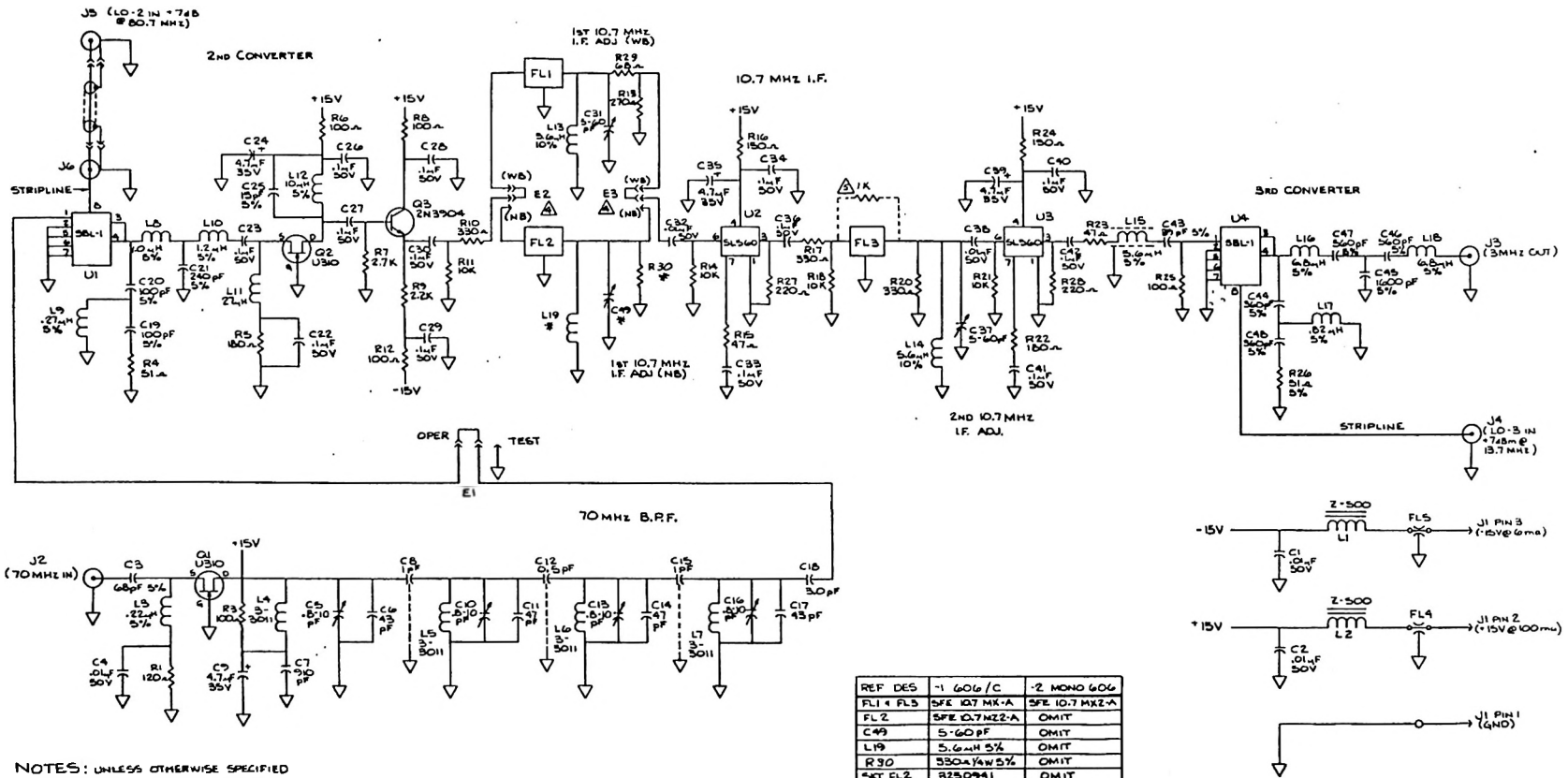

REF DES	-1 606/C	-2 MONO 606
FL1 & FL3	SFE 10.7 MX-A	SFE 10.7 MXZ-A
FL2	SFE 10.7 MZ2-A	OMIT
C49	5-60 pF	OMIT
L19	5.6 mH 5%	OMIT
R30	330Ω ¼W 5%	OMIT
SKT FL2	8250941	OMIT

NOTES: UNLESS OTHERWISE SPECIFIED

1. RESISTORS ARE IN OHMS ¼W, 5%, CAPACITORS ARE IN MICROFARADS, INDUCTORS ARE IN MICROHENRYS.
2. TRIM & DRILL 51D6052
3. COMPONENT LAYOUT 20D2945

⚠ E2 & E3 ARE BANDWIDTH SELECT JUMPERS

⚠ FL3 REMOVED AND 1K RESISTOR INSTALLED FOR ULTRA WIDE BAND APPLICATIONS.

Moseley

70 - 3 MHz. Double Converter
PCL - 606 Schematic

TOL: FRACT. ± 1/32. .XX ± .030. .XXX ± .010. ∠ ± 1/2°

DWN | CHK | ENG | SCALE:

9107382 | 2

REVISIONS | DATE | SHEET APPR.

MUSELEY ASSOCIATES, INC.
111 CASTILIAN DRIVE
SANTA BARBARA, CA 93117-3093
(805) 968-9621

DATE: 1/16/87

PARENT ITEM: 9302076 DESCRIPTION: ASSY DBL CONV 70-3MHZ NEUT 606
ENG.DRAWING NO.: 2002945-0 PRE

REF NBR	COMPONENT ITEM NBR	COMPONENT DESCRIPTION & COMMENTS	ENG.DRAWING NO.		QUANTITY PER	UM
1	3473899	PCB DBL CONVERTER PCL-606 SEC	5106052		1.000	EA
2	3630456	XT 2N3904 Q3	2N3904		1.000	EA
3	1090182	SCR PNH PHPS 6-32 X 1/4 SST			4.000	EA
4	3350195	MIXER BAL U1,U4	SBL-1		2.000	EA
5	3730769	IC SL560C U2,U3	SL560C		2.000	EA
6	1230986	STDF 1/4 RND 6-32 X 7/8 AL	8160-A-0632		2.000	EA
7	3640307	XT U310 Q1,Q2	U310		2.000	EA
8	2062529	SHIELD PARTITION	0582810	C	3.000	EA
9	2300820	ASSY CABLE DBL CONV PCL-606	2481086	A	1.000	EA
10	2091999	FRAME DBL CONV PCL-606/SEC	0503150		1.000	EA
11	2090967	FRAME BASE MODULE PCL-606	05C2867	E	1.000	EA
14	2110237	HEATSINK TO-5 PUSH-ON U2,U3	#1115B		2.000	EA
16	3090230	CONN SMB PC RT ANG MALE BLKHD J2,J3,J4	2110-1511-000		3.000	EA
18	3291069	FILTER FEED THRU SM THD FL4,FL5	859619-1		2.000	EA
19	4310264	CAP .1 50V Z5U 20% C22,C23,C26,C27,C28,C29,C30,C33,C34,C36,C40,C41, C42	5020ES50RD104M		13.000	EA
20	4310272	CAP .01 50V X7R 10% C32,C38	5018EM50RD103K		2.000	EA
21	4210548	CAP MICA DIP 910PF 5% C7	DM-15-911J		1.000	EA
22	4280053	CAP TANT EPOX-DIP 4.7/35V 10% C9,C24,C35,C39	196D475X0035JA1		4.000	EA
23	4210167	CAP MICA DIP 39PF 5% C43	DM-15-390J		1.000	EA
24	4210260	CAP MICA DIP 100PF 5% C19,C20	DM-15-101J		2.000	EA
25	4210075	CAP MICA DIP 15PF 5% C25	DM-15-150J		1.000	EA
26	4210373	CAP MICA DIP 240PF 5% C21	DM-15-241J		1.000	EA
27	4210480	CAP MICA DIP 560PF 5% C45,C47	DM-15-561J		2.000	EA
28	4210423	CAP MICA DIP 360PF 5% C44,C48	DM-15-361J		2.000	EA
29	4210225	CAP MICA DIP 68PF 5% C3	DM-15-680J		1.000	EA
30	4210183	CAP MICA DIP 47PF 5% C11,C14	DM-15-470J		2.000	EA

REF NBR	COMPONENT ITEM NBR	COMPONENT DESCRIPTION & COMMENTS	ENG.DRAWING NO.	QUANTITY PER	UM
31	4220075	CAP MICA DIP 1600PF 5% C45	DM-19-162J	1.000	EA
32	4310132	CAP DISC .01/50V C1,C2,C4	UK-50-103	3.000	EA
33	4350518	CAP CHIP .5 PF +/-.1PF P90 C12	100B0R5BNMS500X	1.000	EA
34	4210175	CAP MICA DIP 43PF 5% C6,C17	DM-15-430J	2.000	EA
35	4240198	CAP 3.0 PF +/- .1PF W/LEADS C18	100B3R0BNMS500X	1.000	EA
36	4370201	CAP MIN VAR PC .8-10PC C5,C10,C13,C16	MVM010W	4.000	EA
37	4350500	CAP ADJ 5-60PF C31,C37	GXD60000	2.000	EA
38	4350708	CAP CHIP 1+/-.25PF P90 W/LEADS C8,C15	100B1R0BNMS500X	2.000	EA
39	4460051	RES 100 OHM 1/4W 5% R3,R6,R8,R12,R25	RC07GF101J	5.000	EA
40	4460820	RES 180 OHM 1/4W 5% R5,R22	RC07GF181J	2.000	EA
41	4460836	RES 330 OHM 1/4W 5% R10,R17,R20	RC07GF331J	3.000	EA
42	4460192	RES 2.2K OHM 1/4W 5% R9	RC07GF222J	1.000	EA
43	4460317	RES 10K OHM 1/4W 5% R11,R14,R18,R21	RC07GF103J	4.000	EA
44	4460812	RES 150 OHM 1/4W 5% R16,R24	RC07GF151J	2.000	EA
45	4460738	RES 47 OHM 1/4W 5% R15,R23	RC07GF470J	2.000	EA
46	4460036	RES 51 OHM 1/4W 5% R4,R25	RC07GF510J	2.000	EA
47	4460200	RES 2.7K OHM 1/4W 5% R7	RC07GF272J	1.000	EA
48	4460655	RES 120 OHM 1/4W 5% R1	RC07GF121J	1.000	EA
49	4460671	RES 270 OHM 1/4 5% R13	RC07GF271J	1.000	EA
50	4130035	FERRITE BEAD R23	K S 001 00/3B	1.000	EA
52	2202299	ASSY COAX SMB/S-SMB PC/RT 8.25 J5-J6	24B1091-2 A1	1.000	EA
53	4020517	IDCTR MINI-RED .27 UH 5% L9	MR .27 5%	1.000	EA
54	4020624	IDCTR 1.0 UH 5% MR 1.0 L8	MR 1.0 5%	1.000	EA
55	4020525	IDCTR MINI-RED 1.2UH 5% L10	MR 1.2 5%	1.000	EA
56	4020459	LNX/FU MINI-RED 10UH 5% L12	MR 10 / 5%	1.000	EA
57	4020541	IDCTR MINI-RED .22 UH 5% L3	MR .22 5%	1.000	EA

PARENT ITEM: 9302076

REF NBR	COMPONENT ITEM NBR	COMPONENT DESCRIPTION & COMMENTS	ENG.DRAWING NO.		QUANTITY PER	UM
58	4020673	IDCTR MINI-RED 27UH 10% L11	MR 27 10%		1.000	EA
59	4020566	IDCTR MINI-RED 5.6 UH 5% L13,L14,L15	MR 5.6 5%		3.000	EA
60	4020574	IDCTR MINI-RED 6.8 UH 5% L16,L18	MR 6.8 5%		2.000	EA
61	4020582	IDCTR MINI-RED .82 UH 5% L17	MR .82 5%		1.000	EA
62	4460077	RES 220 OHM 1/4W 5% R27,R28	RC07GF221J		2.000	EA
63	4050191	TOROID PC MOUNTING L4,L5,L6,L7	03-3011	C1	4.000	EA
64	4020467	FERROX CUBE 500 OHM L1,L2	VK200 10/3B		2.000	EA
65	3250941	SKT 3 PIN FL1,FL3	1-583773-1		2.000	EA
66	3090370	CONN 3 PIN SNGL ROW STR HDR E1,E2,E3	87224-3		3.000	EA
67	3250917	JUMPER MINI FOR 2 PINS=.025/.1 E1,E2,E3	65474-001		3.000	EA
69	2062602	SHIELD MAGNETIC CYLIN PCL-606 L15	05B2836	A0	1.000	EA
70	1050129	SCR PNH PHPS 4-40 X 1/4 SST			2.000	EA
72	1310095	CLIP PCL-606	05C2882	B	16.000	EA
75	1641927	W BUSS 22GA	298		.250	FT
76	4460044	RES 68 OHM 1/4W 5% R29	RC07GF680J		1.000	EA

MOSELEY ASSOCIATES, INC.
111 CASTILIAN DRIVE
SANTA BARBARA, CA 93117-3093
(805) 968-9621

DATE: 1/19/87

PARENT ITEM: 9302498 DESCRIPTION: ASSY DBL CONV 70-3MHZ PCL605/C
ENG.DRAWING NO.: 20D2945-1 PRE

REF NBR	COMPONENT ITEM NBR	COMPONENT DESCRIPTION & COMMENTS	ENG.DRAWING NO.	QUANTITY PER	UM
12	2091163	ASSY MODULE COVER CKT DBL CONV	05C2901 C	1.000	EA
13	2091155	ASSY MODULE COVER COMP DBL CON	05C2900 C	1.000	EA
77	3350261	FLTR CERAMIC 10.7 MHZ FL1,FL3	SFE 10.7 MX-A	2.000	EA
78	3350352	FILTER CERAMIC 10.7MZ2 FL2	SFE 10.7 MZ2-A	1.000	EA
79	4350500	CAP ADJ 5-60PF C49	GX050000	1.000	EA
80	4020566	IDCTR MINI-RED 5.6 UH 5% L19	MR 5.6 5%	1.000	EA
81	4460836	RES 330 OHM 1/4W 5% R30	RC07GF331J	1.000	EA
82	3250941	SKT 3 PIN FL2	1-583773-1	1.000	EA
100	9302076	ASSY DBL CONV 70-3MHZ NEUT 606	20D2945-0 PRE	1.000	EA

SECOND AND THIRD LOCAL OSCILLATOR

Schematic 91D7386
Parts List 20D2948

The Second and Third Local Oscillator module provides two local oscillator signals (80.7 MHz and 13.7 MHz) to the Double Converter module.

The Second Local Oscillator consists of crystal-controlled oscillator Q1 and crystal Y1, operating at 20.175 MHz. LO2 Frequency Adjust C10 or C60 - selected by jumper E1 - can pull the crystal frequency by approximately +/-5 kHz. The LO signal is buffered by Q2 and sent to first push-push frequency doubler U1 and associated circuitry. TP1 (buffer level) monitors the drive level to the first doubler and should indicate between +2 V and +5 V on a high impedance voltmeter. First Doubler Adjust L5 tunes the output of the first doubler, and the voltage at TP2 (First Doubler Level) should indicate between +2.3 V and +3.0 V.

The output of the First Doubler drives second push-push Frequency Doubler U2 and associated circuitry. Both frequency doublers use well balanced input transformers and tightly matched monolithic transistors, yielding excellent rejection of fundamental and odd order harmonics at their outputs.

LO2 Output Adjust L6 is used to tune the second doubler for maximum output at TP3 (LO2 Output Level). This voltage should be between +0.8V and +1.2V. The output of the second local oscillator is applied to J2 at a level of +5 dBm to +10 dBm at a frequency of 80.7 MHz adjustable by +/-20 kHz.

The third local oscillator consists of crystal-controlled oscillator Q3 and 13.7 MHz crystal Y2, followed by buffer amplifier Q4 and a 13.7 MHz low-pass filter. The LO3 output level at TP4 should be between +0.8V and +1.2V. The output signal appears at J3 at a level of +5 dBm to 10 dBm. Extremely low noise floors are achieved in both the second and third local oscillators by using the crystals as series resonant bandpass filters between the oscillators and their buffer amplifiers.

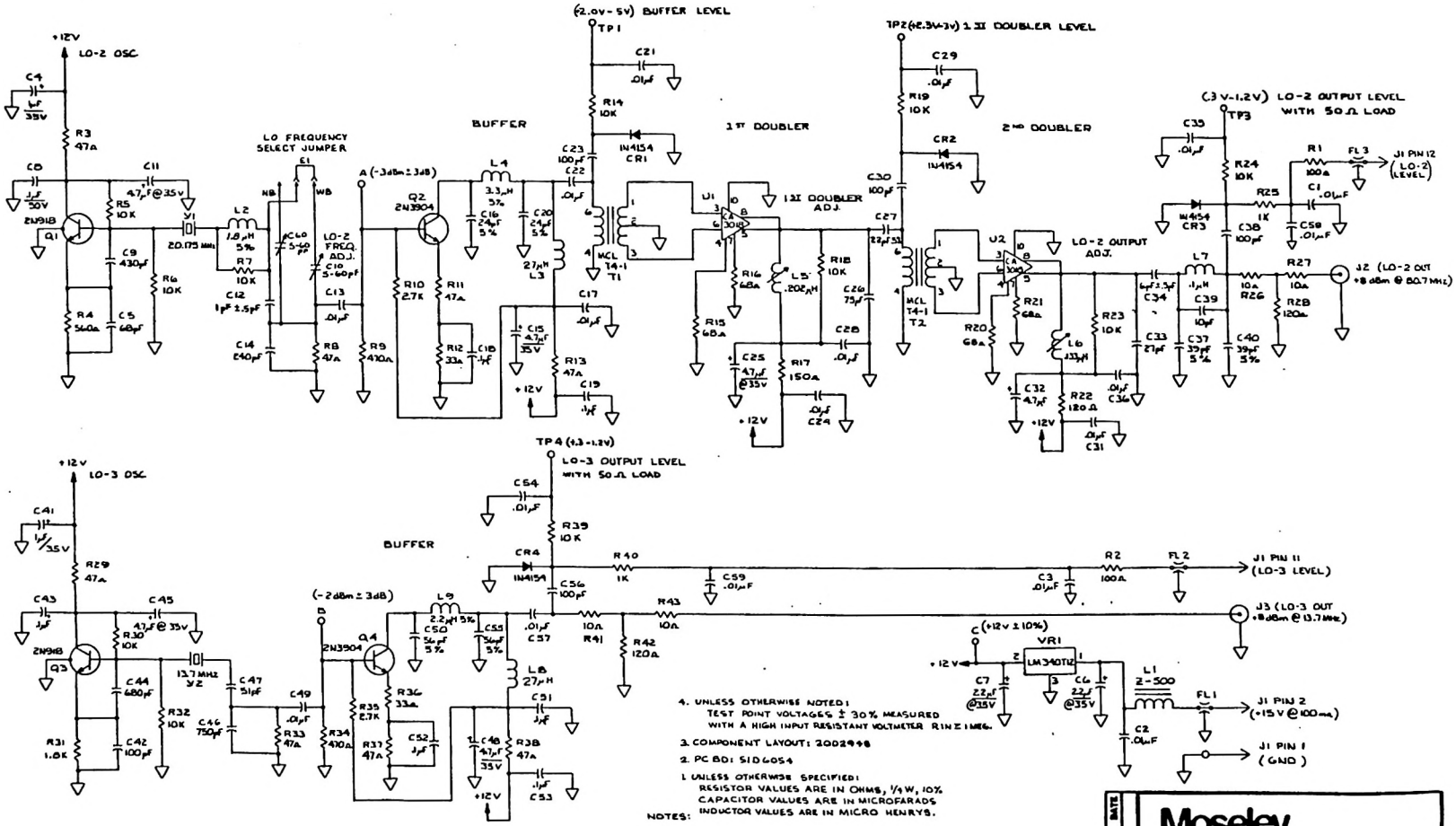

NOTES:

4. UNLESS OTHERWISE NOTED: TEST POINT VOLTAGES ± 30% MEASURED WITH A HIGH INPUT RESISTANT VOLTMETER RIN ≥ 1MEG.
3. COMPONENT LAYOUT: 2002448
2. PC BD: 51D6054
1. UNLESS OTHERWISE SPECIFIED: RESISTOR VALUES ARE IN OHMS, 1/4W, 10%. CAPACITOR VALUES ARE IN MICROFARADS. INDUCTOR VALUES ARE IN MICRO HENRYS.

DATE	Moseley	
REVISIONS	Schematic 80.7/13.7 2nd/3rd L.O.	
MAINT. APPR.	TOL: FRACT. ± 1/32, .XX ± .030, .XXX ± .010, ∠ ± 1/2°	
DRN	SCALE:	
CHK	91D7386	1
ENG		

MOSELEY ASSOCIATES, INC.
111 CASTILIAN DRIVE
SANTA BARBARA, CA 93117-3093
(805) 968-9621

DATE: 1/16/87

PARENT ITEM: 9302118 DESCRIPTION: ASSY 2ND/3RD LO 80.7/13.7 SEC
ENG.DRAWING NO.: 20D2948 PRE

REF NBR	COMPONENT ITEM NBR	COMPONENT DESCRIPTION & COMMENTS	ENG.DRAWING NO.		QUANTITY PER	UM
1	3473931	PCB 80.7/13.7 2ND/3RD LO SEC	51D6054	PRE	1.000	EA
2	2092070	FRAME 2ND/3RD LO PCL-606 SEC	05D3159	PRE	1.000	EA
3	2090967	FRAME BASE MODULE PCL-606	05C2867	E	1.000	EA
4	2090975	COVER MODULE PCL-606	05C2868	D	2.000	EA
5	3250495	SKT PIN .0850DX.200L GOLD FIN	450-3286-01-03		4.000	EA
6	1310093	CLIP PCL-606	05C2882	B	16.000	EA
7	4310264	CAP .1 50V Z5U 20% C8,C18,C19,C43,C51,C52,C53	5020E550RD104M		7.000	EA
8	4310272	CAP .01 50V X7R 10% C1,C2,C3,C13,C17,C21,C22,C24,C28,C29,C31,C35, C36,C49,C54,C57,C58,C59	5018E450RD103K		18.000	EA
9	4210050	CAP MICA DIP 10PF +/- 0.5 C39	DM-15-100D		1.000	EA
10	4210100	CAP MICA DIP 22PF 5% C27	DM-15-220J		1.000	EA
11	4210233	CAP MICA DIP 75PF 5% C26	DM-15-750J		1.000	EA
12	4210266	CAP MICA DIP 100PF 5% C23,C30,C38,C42,C56	DM-15-101J		5.000	EA
13	4210373	CAP MICA DIP 240PF 5% C14	DM-15-241J		1.000	EA
14	4210449	CAP MICA DIP 430PF 5% C9	DM-15-431J		1.000	EA
15	4210506	CAP MICA DIP 680PF 5% C44	DM-15-681J		1.000	EA
16	4210514	CAP MICA DIP 750PF 5% C46	DM-15-751J		1.000	EA
17	4210191	CAP MICA DIP 51PF 5% C47	DM-15-510J		1.000	EA
18	4210209	CAP MICA DIP 56PF 5% C50,C55	DM-15-560J		2.000	EA
19	4210225	CAP MICA DIP 68PF 5% C5	DM-15-680J		1.000	EA
20	4210118	CAP MICA DIP 24PF 5% C16,C20	DM-15-240J		2.000	EA
21	4210126	CAP MICA DIP 27PF 5% C33	DM-15-270J		1.000	EA
22	4210167	CAP MICA DIP 39PF 5% C37,C40	DM-15-390J		2.000	EA
23	4280046	CAP TANT EPOX-DIP 2.2/35V 20% C6,C7	196D225X0035JA1		2.000	EA
24	4280053	CAP TANT EPOX-DIP 4.7/35V 10% C11,C15,C25,C32,C45,C48	196D475X0035JA1		6.000	EA
25	4350500	CAP ADJ 5-60PF C10,C60	GXD60000		2.000	EA

REF NBR	COMPONENT ITEM NBR	COMPONENT DESCRIPTION & COMMENTS	ENG.DRAWING NO.		QUANTITY PER	UM
26	4370367	CAP MICA DIP 6PF C34	CM05FD060D03		1.000	EA
27	4210001	CAP MICA DIP 1PF +/- 0.5 C12	DM-15-010D		1.000	EA
28	4280038	CAP TANT EPOX-DIP 1/35V 20% C4,C41	196D105X0035HA1		2.000	EA
29	3600145	DIO 1N4154 25V 4NS SI DO35 CR1,CR2,CR3,CR4	1N4154		4.000	EA
30	4410247	RES 1K OHM 1/4W 10% R25,R40	RC07GF102K		2.000	EA
31	4410270	RES 1.8K OHM 1/4W 10% R31	RC07GF182K		1.000	EA
32	4410379	RES 10K OHM 1/4W 10% R5,R6,R7,R14,R18,R19,R23,R24,R30,R32,R39	RC07GF103K		11.000	EA
33	4410023	RES 10 OHM 1/4W 10% R26,R27,R41,R43	RC07GF100K		4.000	EA
34	4410296	RES 2.7K OHM 1/4W 10% R10,R35	RC07GF272K		2.000	EA
35	4410064	RES 33 OHM 1/4W 10% R12,R36	RC07GF330K		2.000	EA
36	4410080	RES 47 OHM 1/4W 10% R3,R8,R11,R13,R29,R33,R37,R38	RC07GF470K		8.000	EA
37	4410122	RES 100 OHM 1/4W 10% R1,R2	RC07GF101K		2.000	EA
38	4410130	RES 120 OHM 1/4W 10% R22,R28,R42	RC07GF121K		3.000	EA
39	4410205	RES 470 OHM 1/4W 10% R9,R34	RC07GF471K		2.000	EA
40	4410213	RES 560 OHM 1/4W 10% R4	RC07GF561K		1.000	EA
41	4410106	RES 68 OHM 1/4W 10% R15,R16,R20,R21	RC07GF680K		4.000	EA
42	4410148	RES 150 OHM 1/4W 10% R17	RC07GF151K		1.000	EA
43	2300838	ASSY CABLE 2ND & 3RD LO PCL606 J1	2481087	A	1.000	EA
44	3340759	XTAL 20.175MHZ PCL-606 2ND LO Y1	30A0080	A0	1.000	EA
45	3340767	XTAL 13.7MHZ PCL-606 3RD LO Y2	30A0081	A0	1.000	EA
46	1560226	TBG TEFLON 20AWG NAT R2	TFT200-20		.100	FT
47	3630001	XT NS2N918 .4W600M030V50M2P Q1,Q3	2N918		2.000	EA
48	3630456	XT 2N3904 Q2,Q4	2N3904		2.000	EA
49	3650074	RGLTR LM340T12/7812 VARV1.5A VR1	LM340T-12		1.000	EA
50	3730041	IC CA3018 XSTR ARRAY U1,U2	CA-3018		2.000	EA
51	4100038	XFMR MCL T4-1 T1,T2	MCL T4-1		2.000	EA

REF NBR	COMPONENT ITEM NBR	COMPONENT DESCRIPTION & COMMENTS	ENG.DRAWING NO.	QUANTITY PER	UM
52	4020681	IDCTR 1.8 UH 5% L2	MR 1.8 5%	1.000	EA
53	4020657	IDCTR 3.3 UH 5% L4	MR 3.3 5%	1.000	EA
54	4020665	IDCTR 2.2 UH 5% L9	MR 2.2 5%	1.000	EA
55	4042008	COIL VAR .202UH GREEN L5	SERIES 117 5/2T	1.000	EA
56	4042073	IDCTR 3.5T ORG .133 UH TYPE E L6	T7-117 3.5T.133	1.000	EA
57	4020640	IDCTR MINI-RED .1 UH 5% L7	MR .10 5%	1.000	EA
58	4020673	IDCTR MINI-RED 27UH 10% L3,L8	MR 27 10%	2.000	EA
59	4020467	FERROX CUBE 500 OHM L1	VK200 10/38	1.000	EA
60	1290188	SIL PAD VR1	7403-09-FR-51	1.000	EA
61	1090182	SCR PNH PHPS 6-32 X 1/4 SST		1.000	EA
62	1090554	NUT HEX 6-32 SM PATT		1.000	EA
63	1090588	WSHR LK #6 SR SST		1.000	EA
64	3291069	FILTER FEED THRU SM THD FL1,FL2,FL3	859619-1	3.000	EA
65	3090230	CONN SMB PC RT ANG MALE BLKHD J2,J3	2110-1511-000	2.000	EA
66	3290152	JACK TEST WHITE R ANGLE TP1,TP2,TP3,TP4	430-101	4.000	EA
67	1050129	SCR PNH PHPS 4-40 X 1/4 SST		2.000	EA
69	3250917	JUMPER MINI FOR 2 PINS=.025/.1 E1	65474-001	1.000	EA
70	3090370	CONN 3 PIN SNGL ROW STR HDR E1	87224-3	1.000	EA

FM DEMODULATOR

Schematic 91D7387
Parts List 20D2949

The FM Demodulator module performs three major functions:

1. Extraction of baseband information from the frequency modulated input signal.

2. Generation of dc metering signal proportional to the logarithm of the input RF carrier over a three-decade range.

3. Generation of a mute signal to squelch the receiver when the RF input signal is too low for reliable operation.

FM Demodulator

The 3 MHz RF signal at J3 is fed to a low-noise amplifier, U4 and its associated circuitry, where it receives approximately 30 dB of voltage amplification. This signal passes through a 3 MHz phase linear bandpass filter (L8 through L10 with C83 and C84). The output of this filter drives a high-gain (60 dB) nonsaturating symmetrical limiting amplifier U6. The amplitude-limited signal is then fed to a precision charge count FM detector to extract the baseband information.

The FM detector operates as follows: Q15, Q16 and Q18 form a differential amplifier with Q13 and Q14 serving as constant-current collector loads. This amplifier has a gain in excess of 30 dB. Q10 and Q17 in conjunction with diodes CR15 through CR17 form low-noise voltage clamps to ensure non-saturating action of the differential amplifier transistors. The current outputs of the differential amplifier alternately charge C62 and C63 through diodes CR12 and CR13. These capacitors are then alternately discharged through Q11 and Q12, the total current being proportional to the signal frequency. Q11 and Q12 serve as current to voltage converters whose outputs are combined and integrated in a 500 kHz low-pass filter (L4 and L5 and associated circuitry). The output from this filter contains the baseband information.

A two-stage low-noise amplifier (U5 and U1) then amplifies the baseband signal to a useful system level. Jumper E1 sets the baseband gain to compensate for the differences in wideband and narrowband transmitter deviation. Baseband

Level Adjust R10 is set to deliver a 3.5 V p-p signal at J2 for an FM signal with 50 kHz (35 kHz in narrowband mode) deviation. This FM detector is inherently wideband, linear, and adjustment free.

RF Signal Strength Detector (Log Amplifier)

The RF signal from U4 is also sent to a four-stage successive limiting differential amplifier (Q2 through Q9) through a simple bandpass filter (L3 and C42). Each stage of this amplifier drives an amplitude detector (CR7 through CR10), which in conjunction with the summing amplifier U3 produces a dc metering signal at J1-9 that is proportional to the logarithm of the RF input level over three decades of amplitude. This voltage is used to indicate RF signal strength over the range of 3 microvolts to 3000 microvolts on the front panel meter. LOG GAIN control R67 is used to establish the linearity of the signal sent to the Metering and Status module.

Mute Logic

The RF signal strength voltage from the log amplifier is also sent to comparator U2, which compares this level to a preset reference voltage established by MUTE Threshold Adjust R22. Decreasing this reference voltage decreases the signal strength required to initiate the mute condition. Whenever the logic circuitry is in the mute condition, MUTE Threshold indicator CR6 will glow red. A 2 dB hysteresis is built into the mute logic to eliminate "chattering" near the mute threshold. Also network CR3, CR4, R16, R17, and C10 provide a fast-attack, slow-release (1 ms and 1.5 seconds respectively) to and from the mute mode to eliminate "thumps". The mute signal is brought out on J1-10 and J1-11.

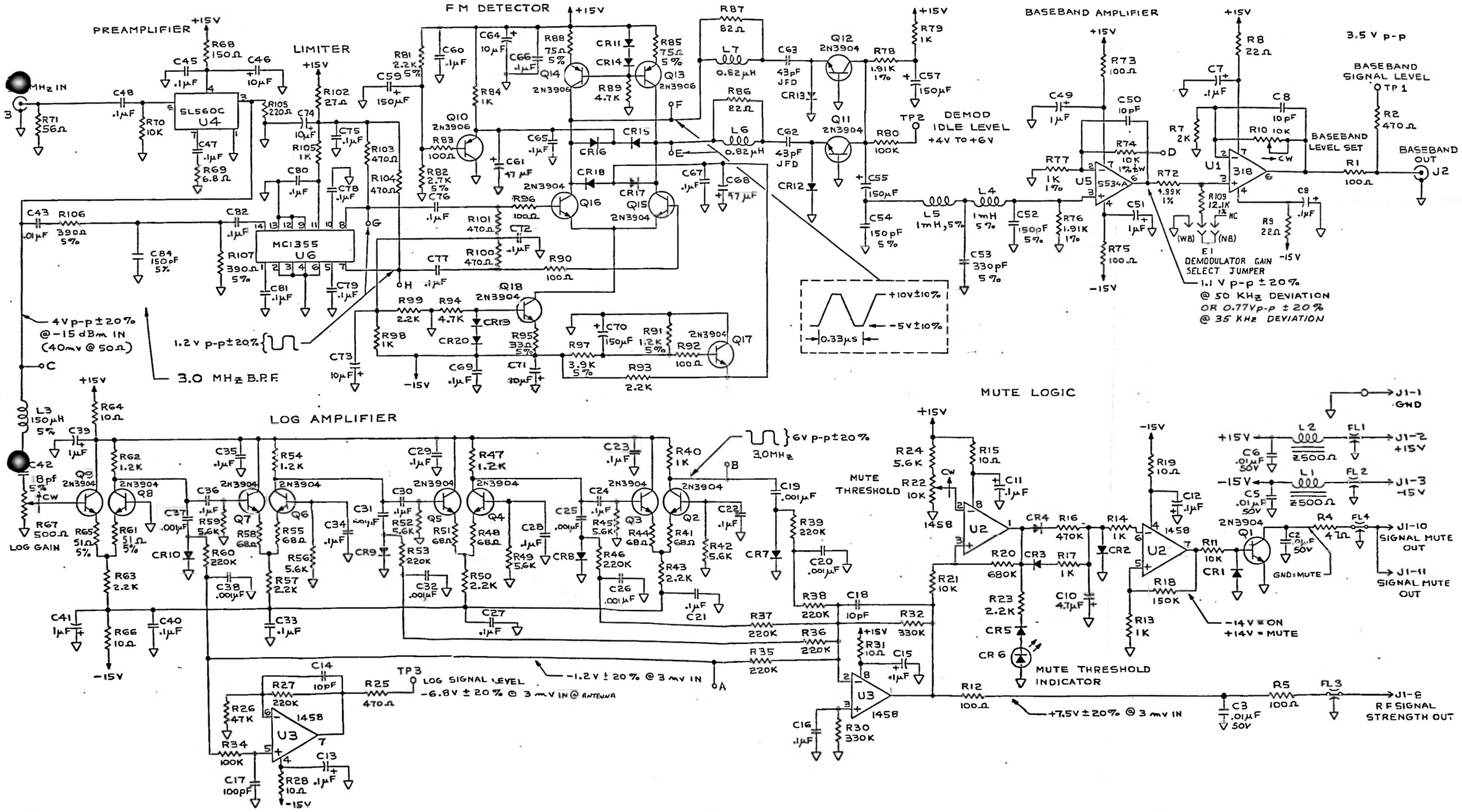

4. POINTS "A" THRU "H" ARE DIAGNOSTIC TEST POINTS.
3. COMPONENT LAYOUT 20D2949.
2. P.C. BOARD 51D6055.
1. UNLESS OTHERWISE SPECIFIED, RESISTORS ARE IN OHMS, ¼ W., 10% CAPACITORS ARE IN MICROFARADS DIODES ARE 1N4154.

NOTES:

Moseley

Schematic - F.M. Demod. Meter Amp & Mute

9107387 | 1

MOSELEY ASSOCIATES, INC.
111 CASTILIAN DRIVE
SANTA BARBARA, CA 93117-3093
(805) 968-9621

DATE: 1/16/87

PARENT ITEM: 9302100 DESCRIPTION: ASSY FM DEMOD SEC
ENG.DRAWING NO.: 2002949 PRE

REF NBR	COMPONENT ITEM NBR	COMPONENT DESCRIPTION & COMMENTS	ENG.DRAWING NO.	QUANTITY PER	UM
1	3473923	PCB FM DEMOD SEC	51D6055	1.000	EA
2	3730173	IC LM318N OPAMP HISPEED U1	LM-318N	1.000	EA
3	3730215	IC LM1458N OPAMP DUAL U2,U3	LM-1458N	2.000	EA
4	3730769	IC SL560C U4	SL560C	1.000	EA
5	3730728	IC NE5534AN OPAMP LO NOISE U5	NE-5534AN	1.000	EA
6	3730348	IC MC1355P AMP FM/IF U6	MC1355P	1.000	EA
7	3600145	DIO 1N4154 25V 4NS SI DO35 CR1,CR2,CR3,CR4,CR5,CR7,CR8,CR9,CR10,CR11,CR12, CR13,CR14,CR15,CR16,CR17,CR18,CR19,CR20	1N4154	19.000	EA
8	3390549	LED RED 2.0@20 WIDE RT/HOLDER CR6	550-0406	1.000	EA
9	3630456	XT 2N3904 Q1,Q2,Q3,Q4,Q5,Q6,Q7,Q8,Q9,Q11,Q12,Q15,Q16,Q17, Q18	2N3904	15.000	EA
10	3630464	XT 2N3906 Q10,Q13,Q14	2N3906	3.000	EA
11	4020467	FERROX CUBE 500 OHM L1,L2	VK200 10/3B	2.000	EA
12	4020483	LNX/FU MINI-RED 150UH 5% L3	MR 150 5%	1.000	EA
13	4020475	IUCTR MINI-RED 1.0 MH 5% L4,L5	MR 1000 5%	2.000	EA
14	4020178	IUCTR RF .82 UH L6,L7	9230-18	2.000	EA
18	4630299	POT CER PC PIN 10K OHM .75W R10,R22	3006P-1-103	2.000	EA
19	4630679	POT CER PC PIN 500 OHM .75W R67	3006P-1-501	1.000	EA
20	4210050	CAP MICA DIP 10PF +/- 0.5 C8,C14,C18,C50	DM-15-100D	4.000	EA
21	4210084	CAP MICA DIP 18PF 5% C42	DM-15-180J	1.000	EA
22	4210266	CAP MICA DIP 100PF 5% C17	DM-15-101J	1.000	EA
23	4210308	CAP MICA DIP 150PF 5% C52,C54,C64	DM-15-151J	3.000	EA
24	4210415	CAP MICA DIP 330PF 5% C53	DM-15-331J	1.000	EA
26	4240149	CAP GL 43PF 5% C62,C63	DY01430J	2.000	EA

REF NOR	COMPONENT ITEM NBR	COMPONENT DESCRIPTION & COMMENTS	ENG.DRAWING NO.	QUANTITY PER	UM
27	4310108	CAP DISC CER .001/1KV C19,C20,C25,C26,C31,C32,C37,C38	DD-102G	8.000	EA
28	4310132	CAP DISC .01/50V C2,C3,C5,C6	UK-50-103	4.000	EA
29	4310264	CAP .1 50V Z5U 20% C7,C9,C11,C12,C13,C15,C16,C21,C22,C23,C24,C27, C28,C29,C30,C33,C34,C35,C36,C40,C45,C47,C48,C60, C65,C66,C67,C69,C72,C75,C76,C77,C78,C79,C80,C81, C82	5020ES50RD104M	37.000	EA
30	4280038	CAP TANT EPOX-DIP 1/35V 20% C39,C41,C49,C51	196D105X0035HA1	4.000	EA
31	4280053	CAP TANT EPOX-DIP 4.7/35V 10% C10	196D475X0035JA1	1.000	EA
32	4280079	CAP TANT EPOX-DIP 10/25V 20% C46,C64,C71,C73,C74	196D106X0025KA1	5.000	EA
33	4280178	CAP TANT EPOX-DIP 150/15V 20% C55,C57,C59,C70	196D157X0015TE4	4.000	EA
34	2062412	SHIELD MAGNETIC CYLINDER L4,L5	0582746 AO	2.000	EA
35	2300840	ASSY CABLE FM DEMOD PCL-606 J1	24B1088 B	1.000	EA
36	2110237	HEATSINK TO-5 PUSH-ON U4	#1115B	1.000	EA
37	3290152	JACK TEST WHITE R ANGLE TP1,TP2,TP3	430-101	3.000	EA
39	3250016	SKT DUAL IN LINE 8 PIN U1,U2,U3,U5	640463-1	4.000	EA
40	3250024	SKT DUAL IN LINE 14 PIN U6	640357-1	1.000	EA
41	3090230	CONN SMB PC RT ANG MALE BLKHD J2,J3	2110-1511-000	2.000	EA
42	4410023	RES 10 OHM 1/4W 10% R15,R19,R28,R31,R64,R66	RC07GF100K	6.000	EA
43	4410122	RES 100 OHM 1/4W 10% R1,R5,R12,R73,R75,R83,R90,R92,R96	RC07GF101K	9.000	EA
44	4410148	RES 150 OHM 1/4W 10% R68	RC07GF151K	1.000	EA
45	4410247	RES 1K OHM 1/4W 10% R13,R14,R17,R40,R79,R84,R98,R105	RC07GF102K	8.000	EA
46	4460630	RES 1.2K 1/4W 5% R47,R54,R62,R91	RC07GF122J	4.000	EA
47	4410379	RES 10K OHM 1/4W 10% R11,R21,R70	RC07GF103K	3.000	EA
48	4410494	RES 100K OHM 1/4W 10% R34,R80	RC07GF104K	2.000	EA
49	4410510	RES 150K OHM 1/4W 10% R18	RC07GF154K	1.000	EA
50	4410726	RES 6.8 OHM 1/4W 10% R69	RC07GF6R8	1.000	EA
51	4410049	RES 22 OHM 1/4W 10% R8,R9	RC07GF220K	2.000	EA

REF NOR	COMPONENT ITEM NBR	COMPONENT DESCRIPTION & COMMENTS	ENG.DRAWING NO.		QUANTITY PER	UM
52	4410056	RES 27 OHM 1/4W 10% R102	RC07GF270K		1.000	EA
53	4460192	RES 2.2K OHM 1/4W 5% R23,R43,R50,R57,R63,R81,R93,R99	RC07GF222J		8.000	EA
54	4460200	RES 2.7K OHM 1/4W 5% R82	RC07GF272J		1.000	EA
55	4410536	RES 220K OHM 1/4W 10% R27,R35,R36,R37,R38,R39,R46,R53,R60	RC07GF224K		9.000	EA
56	4460614	RES 33 OHM 1/4W 5% R95	RC07GF330J		1.000	EA
57	4460697	RES 3.9K OHM 1/4W 5% R97	RC07GF392J		1.000	EA
58	4410551	RES 330K OHM 1/4W 10% R30,R32	RC07GF334K		2.000	EA
59	4460101	RES 390 OHM 1/4W 5% R106,R107	RC07GF391J		2.000	EA
60	4520052	RES 4.99K OHM 1/4W 1% R72	RN60D4991F		1.000	EA
61	4410205	RES 470 OHM 1/4W 10% R2,R25,R100,R101,R103,R104	RC07GF471K		6.000	EA
62	4410338	RES 4.7K OHM 1/4W 10% R69,R94	RC07GF472K		2.000	EA
63	4410452	RES 47K OHM 1/4W 10% R26	RC07GF473K		1.000	EA
64	4410577	RES 470K OHM 1/4W 10% R16	RC07GF474K		1.000	EA
65	4410346	RES 5.6K OHM 1/4W 10% R24,R42,R45,R49,R52,R56,R59	RC07GF562K		7.000	EA
66	4410106	RES 68 OHM 1/4W 10% R41,R44,R48,R51,R55,R58	RC07GF680K		6.000	EA
67	4410593	RES 680K OHM 1/4W 10% R20	RC07GF684K		1.000	EA
68	4460646	RES 75 OHM 1/4W 5% R85,R88	RC07GF750J		2.000	EA
69	4520250	RES 1.91K OHM 1/4W 1% R76,R78	RN60D1911F		2.000	EA
70	4520037	RES 1K OHM 1/4W 1% R77	RN60D1001F		1.000	EA
71	4510145	RES 10.0K OHM 1/8W 1% R74	RN55C1002F		1.000	EA
72	2090967	FRAME BASE MODULE PCL-606	05C2867	E	1.000	EA
73	2092062	FRAME FM DEMOD PCL-606 SEC	0503150		1.000	EA
74	1050129	SCR PNH PHPS 4-40 X 1/4 SST			2.000	EA
75	4410114	RES 82 OHM 1/4W 10% R66,R67	RC07GF820K		2.000	EA
76	2090975	COVER MODULE PCL-606	05C2868	D	2.000	EA
77	1310093	CLIP PCL-606	05C2882	B	16.000	EA
78	4410080	RES 47 OHM 1/4W 10% R4	RC07GF470K		1.000	EA
79	4410096	RES 56 OHM 1/4W 10% R71	RC07GF560K		1.000	EA

REF NBR	COMPONENT ITEM NBR	COMPONENT DESCRIPTION & COMMENTS	ENG.DRAWING NO.	QUANTITY PER	UM
80	3291069	FILTER FEED THRU SM THD FL1,FL2,FL3,FL4	859619-1	4.000	EA
82	4400036	RES 51 OHM 1/4W 5% R81,R85	RC07GF510J	2.000	EA
83	1500226	TBG TEFLON 20AWG NAT L8	TFT200-20	.062	FT
84	4410163	RES 220 OHM 1/4W 10% R108	RC07GF221K	1.000	EA
85	4250137	CAP TANT EPOX-DIP 47/20V C61,C68	196D476X0020PE4	2.000	EA
86	4310272	CAP .01 50V X7R 10% C43	5018EM50RD103K	1.000	EA
87	1641927	W BUSS 22GA L8	298	.083	FT
88	3250917	JUMPER MINI FOR 2 PINS=.025/.1 E1	65474-001	1.000	EA
89	3090370	CONN 3 PIN SNGL ROW STR HDR E1	87224-3	1.000	EA
90	4401042	RES 2K OHM 1/4W 5% R7	RC07GF202J	1.000	EA
91	4511499	RES MF 12.1K OHM 1/8W 1% R109	RN55D1212F	1.000	EA

COMPOSITE BASEBAND PROCESSOR

Schematic 91D7383
Parts List 20D2946-0 & -1

The Composite Baseband Processor module performs three main functions:

1. Divides the input baseband signal into separate composite program and subcarrier channels.

2. Applies high-frequency response correction to the baseband signals to compensate for the high-frequency roll-off caused by the 10.7 MHz IF filters.

3. Mutes the program and subcarrier outputs when commanded by the Mute and Transfer module.

The 3.5 V p-p baseband signal from the FM Demodulator module enters the Composite Baseband Processor through J2. It first passes through a low-pass filter (consisting of inductors L4 through L7 and capacitors C7 through C11) to attenuate high-frequency adjacent channel signals which otherwise might cause slew rate limiting in the following stages.

The filtered output is passed to mute switch U6, which consists of series-shunt FET switches. A +5 V control voltage at J1 pin 11 or 12 causes control logic U1 to drive the mute switch into the mute state. Control voltages less than +0.6V allow the mute switch to pass the baseband signal to buffer amplifier U7.

The output of U7 feeds high-frequency correction amplifier U2. This amplifier adds a controlled boost to frequencies between 20 kHz and 80 kHz to compensate for the attenuation of the composite high-frequency response caused by the 10.7 MHz IF bandpass filters. HF TILT adjustment R10 or R73, as selected by jumper E1 for wide or narrowband operation respectively, is used to set the amount of high-frequency boost. The output of U2 is split and routed to both the composite and multiplex amplifier channels.

Signal flow through the composite channel begins with low-frequency gain correction amplifier U8. This circuit compensates for low-frequency response deficiencies in older stereo generators and FM exciters. LF TILT adjustment R18 sets the amount of boost or cut for frequencies below 30 Hz; it is normally set for flat response.

The output of U8 is passed through an 80 kHz (standard) or 110 kHz (optional) low-pass filter to remove any high-frequency subcarriers, noise or spurious signals which could degrade the performance of FM stereo reception if allowed to enter an FM exciter. The output of this filter (L11 through L13, C21, and C48 through C53) is buffered by amplifier U3.

The output signal of U3 is passed to the composite delay equalizer circuit to compensate for group delay variations in the 80 kHz 100 kHz) low-pass filter. U9 and associated circuitry form a second-order all-pass network. Amplifiers U10, U11, and their circuitry form a stable synthesized inductor which is used in the all-pass network. Delay Equalizer adjustment R25 or R75, as selected by jumper E2 for wide or narrowband operation respectively, controls the magnitude of the group delay compensation applied. When properly adjusted, stereo separation will exceed 48 dB (43 dB narrowband) from 30 Hz to 15 kHz. The signal from U9 is passed through a dc decoupling network to composite output connector J4. Also, the signal from U9 is decoupled and sent to TP1 and J1 pin 7 for test and front panel meter level indications. The nominal output levels at these points are 3.5 V p-p for 100% modulation.

Signal flow through the MUX channel begins with the output of U2 driving the 80 kHz or 110 kHz MUX high-pass filter (L8 and L9, and C26 through C30), which attenuates the composite stereo signal and passes the MUX subcarriers. MUX amplifier U4 then amplifies the subcarriers to a useful signal level. MUX Level adjustment R31 is used to set the gain of this amplifier.

The output of U4 is passed through the 200 kHz or 130 kHz, as selected by jumper E3 for wideband or narrowband operation respectively, MUX low-pass filter L10, C34, and C35 or L14, C70, and C71 to attenuate any high-frequency noise. This filter exhibits a high-frequency rise in passband response to compensate for the subcarrier amplitude roll-off caused by the 10.7 MHz IF bandpass filters. The output from this filter is then buffered by amplifier U5. The output of U5 is sent to MUX output connector J3. The output of U5 is also routed to TP2 and J1 pin 10 for test and front panel meter level indications. The nominal MUX output levels at these points are 1.5 V p-p and 2.25 V p-p for 110 kHz and 185 kHz MUX signals, which deviate the main carrier 5 kHz and 7.5 kHz respectively.

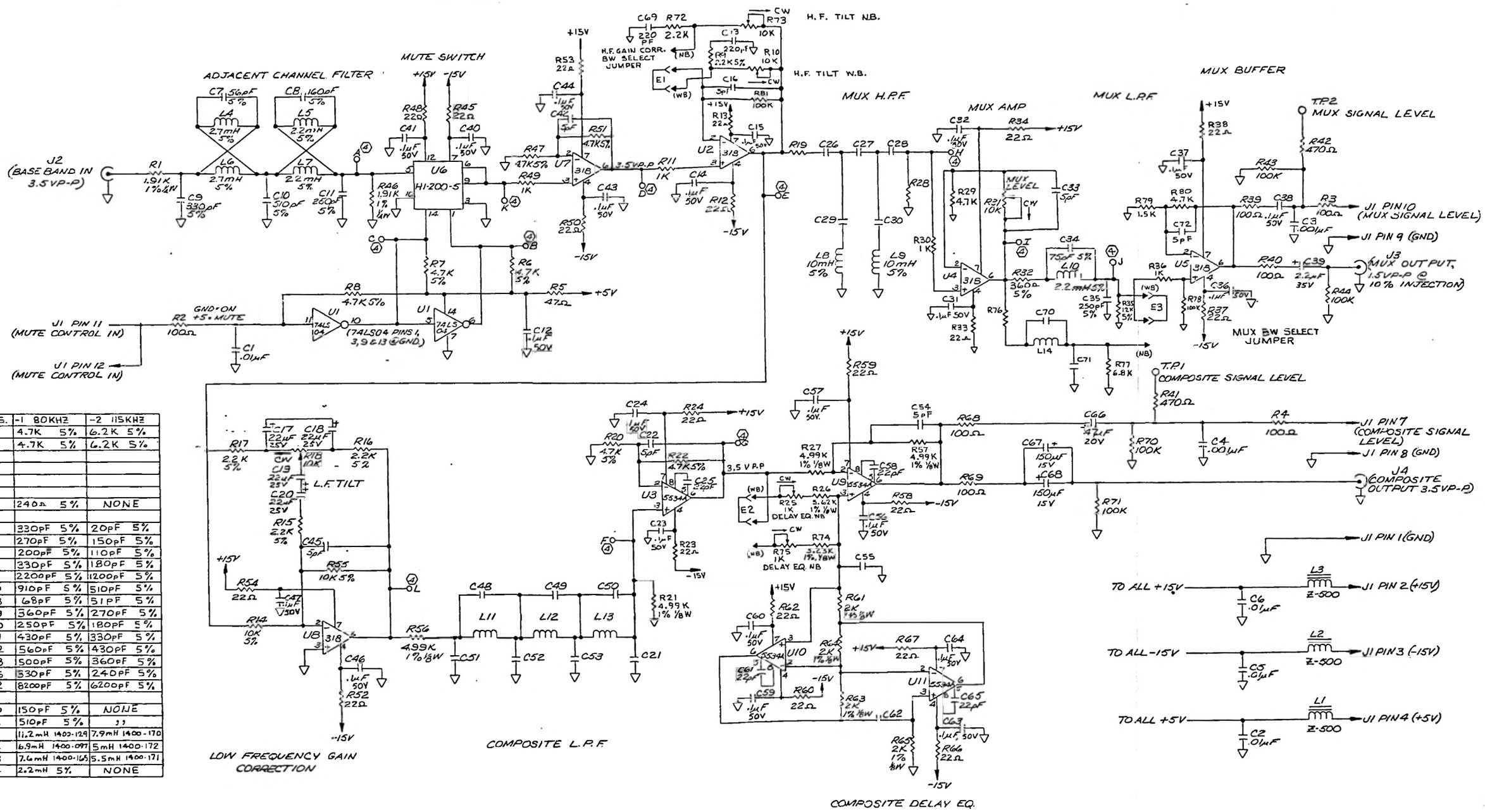

REF. DES.	-1 80KHZ	-2 115KHZ
R19	4.7K 5%	6.2K 5%
R28	4.7K 5%	6.2K 5%
R76	240Ω 5%	NONE
C21	330pF 5%	20pF 5%
C26	270pF 5%	150pF 5%
C27	200pF 5%	110pF 5%
C28	330pF 5%	180pF 5%
C29	2200pF 5%	1200pF 5%
C30	910pF 5%	510pF 5%
C48	68pF 5%	51pF 5%
C49	360pF 5%	270pF 5%
C50	250pF 5%	180pF 5%
C51	430pF 5%	330pF 5%
C52	560pF 5%	430pF 5%
C53	500pF 5%	360pF 5%
C55	530pF 5%	240pF 5%
C62	8200pF 5%	6200pF 5%
C70	150pF 5%	NONE
C71	510pF 5%	,,
L11	11.2mH 1400-129	7.9mH 1400-170
L12	6.9mH 1400-097	5mH 1400-172
L13	7.6mH 1400-165	5.5mH 1400-171
L14	2.2mH 5%	NONE

(4) POINTS WITH LETTER DESIGNATIONS "A" THRU "L" ARE DIAGNOSTIC TEST POINTS.

3 COMPONENT LAYOUT: 20D2946

2 P.C BD: 51D6053

1 UNLESS OTHERWISE SPECIFIED:
RESISTOR VALUES ARE IN OHMS, 1/4 W, 10%
CAPACITOR VALUES ARE IN MICROFARADS.

NOTES:

Moseley

Schematic
Corp. Baseband Pro.

9107383 | 1

MUSELEY ASSOCIATES, INC.
111 CASTILIAN DRIVE
SANTA BARBARA, CA 93117-3093
(805) 968-9621

DATE: 1/16/87

PARENT ITEM: 9302191 DESCRIPTION: ASSY BASEBAND PROC NEUTER 606C
ENG.DRAWING NO.: 2002946-0 PKE

REF NBR	COMPONENT ITEM NBR	COMPONENT DESCRIPTION & COMMENTS	ENG.DRAWING NO.		QUANTITY PER	UM
1	3473907	PCB COMP BASEBAND PROC 606 SEC	5106053		1.000	EA
2	2092005	FRAME BASEBAND PROC PCL-606SEC	0503151		1.000	EA
3	2090967	FRAME BASE MODULE PCL-606	05C2867	E	1.000	EA
4	3730173	IC LM318N OPAMP HISPEED U2,U4,U5,U7,U8	LM-318N		5.000	EA
5	3090230	CONN SMB PC RT ANG MALE BLKHD J2,J3,J4	2110-1511-000		3.000	EA
6	3090222	CONN 12PIN SNGL ROW RTANG HDR J1	1-87233-2		1.000	EA
7	1310093	CLIP PCL-606	05C2882	B	16.000	EA
8	1050129	SCR PNH PHPS 4-40 X 1/4 SST			2.000	EA
9	3250016	SKT DUAL IN LINE 8 PIN U2,U3,U4,U5,U7,U8,U9,U10,U11	640463-1		9.000	EA
12	4510913	RES 5.23K OHM 1/8W 1% R74	RN55C5231F		1.000	EA
13	4410122	RES 100 OHM 1/4W 10% R2,R3,R4,R39,R40,R68,R69	RC07GF101K		7.000	EA
14	4410247	RES 1K OHM 1/4W 10% R11,R29,R30,R36,R49	RC07GF102K		5.000	EA
15	4410288	RES 2.2K OHM 1/4W 10% R72	RC07GF222K		1.000	EA
16	4460317	RES 10K OHM 1/4W 5% R14,R55	RC07GF103J		2.000	EA
17	4410049	RES 22 OHM 1/4W 10% R12,R13,R23,R24,R33,R34,R37,R38,R45,R48,R50,R52, R53,R54,R58,R59,R60,R62,R66,R67	RC07GF220K		20.000	EA
18	4460275	RES 6.8K OHM 1/4W 5% R77	RC07GF682J		1.000	EA
19	4460192	RES 2.2K OHM 1/4W 5% R9,R15,R16,R17	RC07GF222J		4.000	EA
20	4460325	RES 12K OHM 1/4W 5% R35	RC07GF123J		1.000	EA
21	4460580	RES 360 OHM 1/4W 5% R32	RC07GF361J		1.000	EA
22	4410080	RES 47 OHM 1/4W 10% R5	RC07GF470K		1.000	EA
23	4410205	RES 470 OHM 1/4W 10% R41,R42	RC07GF471K		2.000	EA
24	4460242	RES 4.7K OHM 1/4W 5% R6,R7,R8,R20,R22,R47,R51,R80	RC07GF472J		8.000	EA
25	4410494	RES 100K OHM 1/4W 10% R43,R44,R70,R71,R78,R81	RC07GF104K		6.000	EA
26	4520250	RES 1.91K OHM 1/4W 1% R1,R46	RN60D1911F		2.000	EA
27	4510293	RES 2.00K OHM 1/8W 1% R61,R63,R64,R65	RN55C2001F		4.000	EA

REF NBR	COMPONENT ITEM NBR	COMPONENT DESCRIPTION & COMMENTS	ENG.DRAWING NO.	QUANTITY PER	UM
28	4510103	RES 4.99K OHM 1/8W 1% R21,R27,R56,R57	RN55E4991F	4.000	EA
29	4510111	RES 5.62K OHM 1/8W 1% R26	RN55C5621F	1.000	EA
30	4410262	RES 1.5K OHM 1/4W 10% R79	RC07GF152K	1.000	EA
31	4630075	POT CER PC PIN 1K OHM .75W 15T R25,R75	3006P-1-102	2.000	EA
32	4630299	POT CER PC PIN 10K OHM .75W R10,R18,R31,R73	3006P-1-103	4.000	EA
35	4310264	CAP .1 50V Z5U 20% C12,C14,C15,C23,C24,C31,C32,C36,C37,C38,C40,C41, C43,C44,C46,C47,C56,C57,C59,C60,C63,C64	5020ES50RD104M	22.000	EA
37	4280045	CAP TANT EPOX-DIP 2.2/35V 20% C39	1960225X0035JA1	1.000	EA
38	4280095	CAP TANT EPOX-DIP 22/35V 10% C17,C18,C19,C20	1960226X9035PE4	4.000	EA
39	4260176	CAP TANT EPOX-DIP 150/15V 20% C67,C68	1960157X0015TE4	2.000	EA
40	4260137	CAP TANT EPOX-DIP 47/20V C65	1960476X0020PE4	1.000	EA
41	4310108	CAP DISC CER .001/1KV C3,C4	DD-102G	2.000	EA
42	4310140	CAP DISC .01/100V C1,C2,C5,C6	TG-S10	4.000	EA
43	4210316	CAP MICA DIP 160PF 5% C8	DM-15-161J	1.000	EA
44	4210100	CAP MICA DIP 22PF 5% C25,C58,C61,C65	DM-15-220J	4.000	EA
46	4210357	CAP MICA DIP 220PF 5% C13,C69	DM-15-221J	2.000	EA
47	4210331	CAP MICA DIP 250PF 5% C11,C35	DM-15-251J	2.000	EA
50	4210415	CAP MICA DIP 330PF 5% C9	DM-15-331J	1.000	EA
53	4210043	CAP MICA DIP 5PF +/- 0.5 C16,C22,C33,C42,C45,C54,C72	DM-15-050D	7.000	EA
55	4210472	CAP MICA DIP 510PF 5% C10	DM-15-511J	1.000	EA
58	4210233	CAP MICA DIP 75PF 5% C34	DM-15-750J	1.000	EA
61	4210209	CAP MICA DIP 56PF 5% C7	DM-15-560J	1.000	EA
64	4020467	FERROX CUBE 500 OHM L1,L2,L3	VK200 10/3B	3.000	EA
65	4020038	IDCTR MINI-RED 2.2 MH 5% L5,L7,L10	MR 2200 5%	3.000	EA
66	4020491	IDCTR 2.7MH 5% L4,L6	MR 2700 5%	2.000	EA
67	4020061	IDCTR MINI-RED 10 MH 5% L8,L9	MR 10,000 5%	2.000	EA

REF NBR	COMPONENT ITEM NBR	COMPONENT DESCRIPTION & COMMENTS	ENG.DRAWING NO.	QUANTITY PER	UM
71	3730934	IC HI-200-5 U6	HI3-0200-5	1.000	EA
72	3730728	IC NE5534AN OPAMP LO NOISE U3,U9,U10,U11	NE-5534AN	4.000	EA
73	3600685	IC SN74LS04N HX INV U1	SN74LS04N	1.000	EA
74	3250024	SKT DUAL IN LINE 14 PIN U1,U6	640357-1	2.000	EA
77	3290152	JACK TEST WHITE R ANGLE TP1,TP2	430-101	2.000	EA
80	3090370	CONN 3 PIN SNGL ROW STR HOR E1,E2,E3	87224-3	3.000	EA
81	3250917	JUMPER MINI FOR 2 PINS=.025/.1 E1,E2,E3	65474-001	3.000	EA

MUSELEY ASSOCIATES, INC.
111 CASTILIAN DRIVE
SANTA BARBARA, CA 93117-3093
(805) 968-9621

DATE: 1/16/87

PARENT ITEM: 9302084 DESCRIPTION: ASSY BASEBAND PROC 80KHZ 606/C
ENG.DRAWING NO.: 2002946-1

REF NBR	COMPONENT ITEM NBR	COMPONENT DESCRIPTION & COMMENTS	ENG.DRAWING NO.		QUANTITY PER	UM
76	2090975	COVER MODULE PCL-606	05C2868	D	2.000	EA
82	9302191	ASSY BASEBAND PROC NEUTER 606C	2002946-0	PRE	1.000	EA
83	4020038	IDCTR MINI-RED 2.2 MH 5% L14	MR 2200 5%		1.000	EA
84	4041109	ASSY 10.71MH CUP CORE COIL L11	02C1400-129	E	1.000	EA
85	4041422	ASSY 7.510MH CUP CORE COIL L13	02C1400-165	E	1.000	EA
86	4041984	IDCTR 6.9MH L12	02C1400-097	E	1.000	EA
87	4210225	CAP MICA DIP 68PF 5% C48	DM-15-680J		1.000	EA
88	4210308	CAP MICA DIP 150PF 5% C70	DM-15-151J		1.000	EA
89	4210340	CAP MICA DIP 200PF 5% C27	DM-15-201J		1.000	EA
90	4210381	CAP MICA DIP 250PF 5% C50	DM-15-251J		1.000	EA
91	4210399	CAP MICA DIP 270PF 5% C26	DM-15-271J		1.000	EA
92	4210415	CAP MICA DIP 330PF 5% C21,C28,C55	DM-15-331J		3.000	EA
93	4210423	CAP MICA DIP 360PF 5% C49	DM-15-361J		1.000	EA
94	4210449	CAP MICA DIP 430PF 5% C51	DM-15-431J		1.000	EA
95	4210454	CAP MICA DIP 500PF 5% C53	DM-15-501J		1.000	EA
96	4210472	CAP MICA DIP 510PF 5% C71	DM-15-511J		1.000	EA
97	4210480	CAP MICA DIP 560PF 5% C52	DM-15-561J		1.000	EA
98	4210548	CAP MICA DIP 910PF 5% C30	DM-15-911J		1.000	EA
99	4220133	CAP MICA DIP 2200PF 1% C29	DM-19-222F		1.000	EA
100	4220232	CAP MICA DIP 8200PF 5% C62	DM-19-822J		1.000	EA
102	4460085	RES 240 OHM 1/4W 5% R76	RC07GF241J		1.000	EA
103	4460242	RES 4.7K OHM 1/4W 5% R19,R28	RC07GF472J		2.000	EA

METERING AND STATUS

Schematic 91D7264
Parts List 20D2818-1 & 5

The receiver Metering and Status board includes three main sections:

1. Eight separate metering functions
2. Power supply and operating status indicators
3. OPERATE/TRANSFER switch

Metering Functions

Potentiometers R1 through R8 are used as input adjustments. Resistors R31 through R38 have been selected to increase the allowable input voltage. The values selected are explained in Note 4 on the schematic.

U4 acts as a switch to select one of the eight metering channels. The selected channel is based on a binary code produced by U3, which is an up/down counter. U2 is incremented and decremented by METER FUNCTION switch S1, U3, and associated circuitry.

U1 decodes the output of the counter and, by activating one of eight LEDs, indicates the position selected.

The output of U4 (the multiplex switch) is buffered and amplified by U7. The output of this buffer is used by half of U5 to indicate the polarity of the input signal (red equals plus, and green equals minus). The output of U7 also drives the absolute value amplifier.

Figure 5-2 is a simplified diagram of the absolute value amplifier. It is included to show the difference in gain between a negative and positive input. The values shown in parentheses are for a typical full-scale input. CR16 and C38 (not shown) provide peak detection of ac waveforms. The output of the absolute amplifier is connected through the harness to an output terminal on the back panel of the Receiver and to U5, the meter ballistics amplifier.

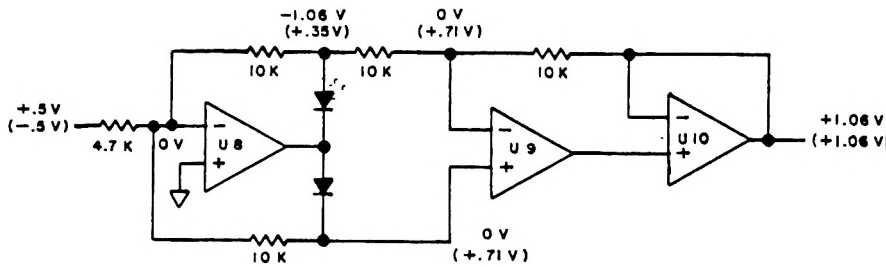

Figure 5-2. Simplified diagram of absolute value amplifier.

U5 acts as an attenuator and meter acceleration amplifier. R9 is used to adjust the meter ballistics response. The output of this circuit is connected to the meter through J1.

Status Indicators

LEDs CR22 through CR24 are used to indicate the status of the power supplies. CR17 and CR18 indicate the status of the receiver. U11 is used as a TTL threshold detector. R97 and R101 set the threshold at approximately 2 volts referred to the input. U12 and associated circuitry are not presently used.

Control Switch

OPERATE/TRANSFER switch S2 is a double-pole, double-throw switch used to activate logic circuits within the receiver.

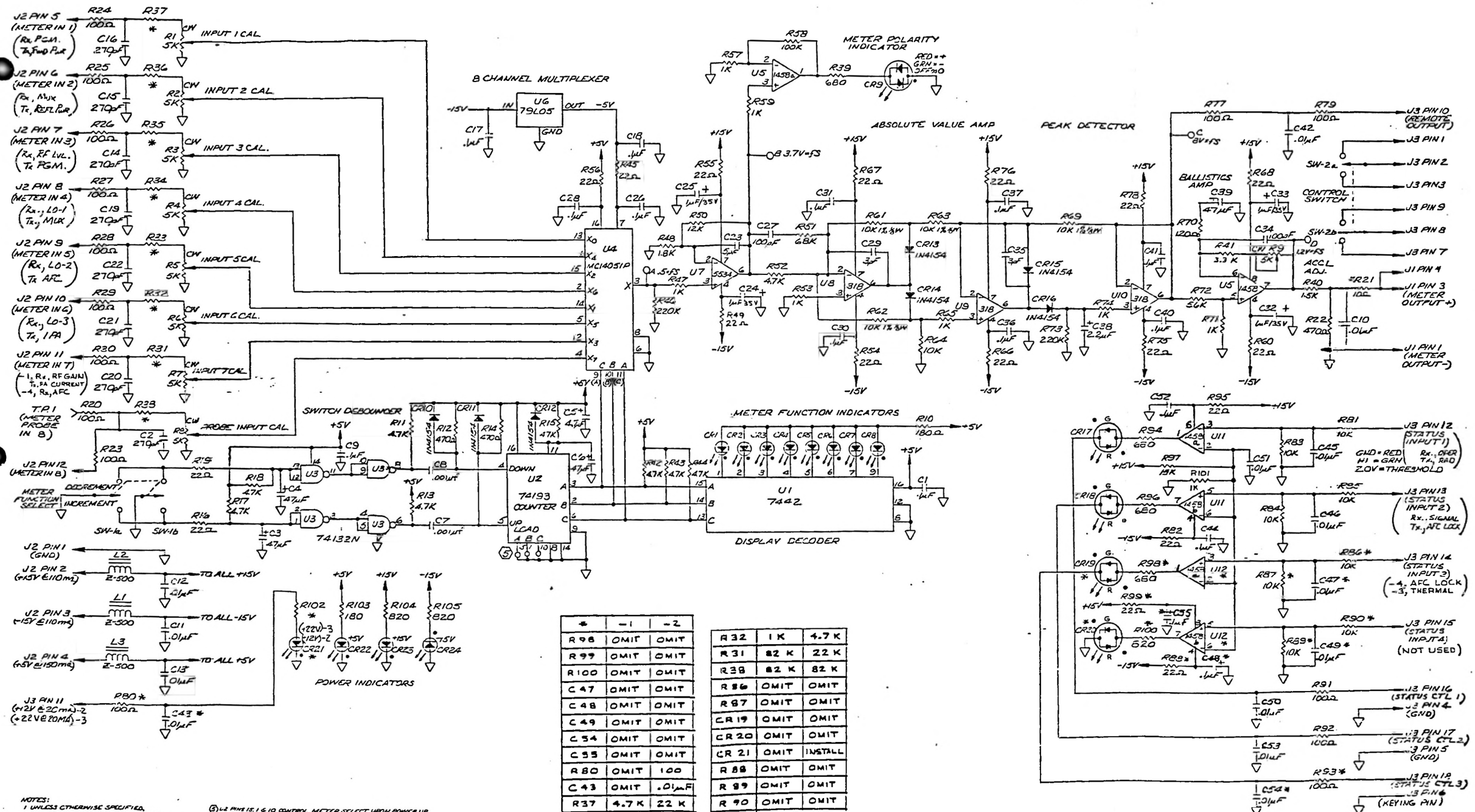

*	-1	-2
R98	OMIT	OMIT
R99	OMIT	OMIT
R100	OMIT	OMIT
C47	OMIT	OMIT
C48	OMIT	OMIT
C49	OMIT	OMIT
C54	OMIT	OMIT
C55	OMIT	OMIT
R80	OMIT	100
C43	OMIT	.01µF
R37	4.7 K	22 K
R36	4.7 K	22 K
R35	22 K	4.7 K
R34	1 K	4.7 K
R33	1 K	22 K

R32	1 K	4.7 K
R31	82 K	22 K
R30	82 K	82 K
R86	OMIT	OMIT
R87	OMIT	OMIT
CR19	OMIT	OMIT
CR20	OMIT	OMIT
CR21	OMIT	INSTALL
R88	OMIT	OMIT
R89	OMIT	OMIT
R90	OMIT	OMIT
SW-2	ON	ON
U12	OMIT	OMIT
R102	OMIT	560
R93	OMIT	OMIT

-2	320/450 MHZ, 960 MHZ XMTR
-1	960 MHZ, 450-1.71 GHZ RCVR
VERSION 1	USE

NOTES:
1. UNLESS OTHERWISE SPECIFIED, ALL RESISTOR VALUES ARE ¼W 10%, ALL CAPACITOR VALUES ARE IN MICROFARADS.
2. PC BOARD 310-3334
3. COMPONENT LAYOUT 2002818
4. R31 THRU R38 VALUES ARE BASED ON THE FOLLOWING DESIGN CRITERIA: FULL SCALE RANGE
   1V TO 3.2V — R = 4.7K
   3.2V TO 10V — R = 22K
   10V TO 32V — R = 82K
5. U2 PINS 15, 1 & 10 CONTROL METER SELECT UPON POWER UP. AS WIRED, INPUT 1 WILL BE SELECTED. IF ANOTHER INPUT IS PREFERRED DRILL HOLES OR CUT TRACES PER CHART BELOW.

INPUT SELECT	1	2	3	4	5	6	7	8
CUT TRACE	NONE	15	1	1&15	10	10&15	1&10	1,10&15

6. ALL DIAGNOSTIC VOLTAGES ARE ± 20%

Moseley

Schematic
Metering & Status Board

9107264 K

MOSELEY ASSOC SINGLE LEVEL BILL - REFERENCE NUMBER SEQUENCE DATE 3/28/85

PRINT PHANTOM ITEMS
PRINT COMPONENTS
PRINT PHANTOM/COMPONENT COMMENTS

PARENT ITEM	CROSS REF ITEM	DESCRIPTION METERING & STATUS BD PCL-606	BATCH QTY
9204165		ENGR DRAW 2002818-01 S	

BOM ITEM	LL CD	COMPONENT & CROSS REF.	DESCRIPTION & COMMENT	ENGINEERING DRAWING NUMBER	QUANTITY PER	UM	ITEM TYP
1	05	9205006	SUBASSY,NEUTER,MTRG/STAT BD	2002818-05 S	1.000	EA	1
2	06	4410338	RES 4.7K OHM 1/4W 10% R36,R37	RC07GF472K	2.000	EA	4
3	06	4410411	RES 22K OHM 1/4W 10% R35	RC07GF223K	1.000	EA	4
4	06	4410247	RES 1K OHM 1/4W 10% R32,R33,R34	RC07GF102K	3.000	EA	4
5	05	4410486	RES 82K OHM 1/4W 10% R31,R38	RC07GF823K	2.000	EA	4
6	05	3190766	SW,DPDT,ON-NONE-(ON) SW2	0601-210	1.000	EA	4

MOSELEY ASSOCIATES, INC.
111 CASTILIAN DRIVE
SANTA BARBARA, CA 93117-3093
(805) 968-9621

DATE: 1/19/87

PARENT ITEM: 9205006 DESCRIPTION: SUBASSY NEUTER MTRG/STAT BD
ENG.DRAWING NO.: 20D2818-05 S

REF NBR	COMPONENT ITEM NBR	COMPONENT DESCRIPTION & COMMENTS	ENG.DRAWING NO.	QUANTITY PER	UM
1	3473048	PCB METERING & STATUS PCL-606	51D5934 E	1.000	EA
3	3730173	IC LM318N OPAMP HISPEED U8,U9,U10	LM-318N	3.000	EA
4	3730215	IC LM1458N OPAMP DUAL U5,U11	LM-1458N	2.000	EA
5	3660206	IC SN7442N BCD-DECIMAL U1	SN7442N	1.000	EA
6	3660420	IC SN74132N QU 2IN NAND ST U3	SN74132N	1.000	EA
7	3660602	IC SN74193N BINUPDWNC02CLCK U2	SN74193N	1.000	EA
8	3680139	IC MC14051P 8CH MUX R280 7V U4	MC14051P	1.000	EA
9	3550132	RGLTR MC79L05 05V 0.1A TO92 U6	MC79L05 ACP	1.000	EA
10	3730728	IC NE5534AN OPAMP LO NOISE U7	NE-5534AN	1.000	EA
11	3250016	SKT DUAL IN LINE 8 PIN U5,U7,U8,U9,U10,U11	640463-1	6.000	EA
12	3250024	SKT DUAL IN LINE 14 PIN U3	640357-1	1.000	EA
13	3250032	SKT DUAL IN LINE 16 PIN U1,U2,U4	640358-1	3.000	EA
17	4410023	RES 10 OHM 1/4W 10% R21	RC07GF100K	1.000	EA
18	4410049	RES 22 OHM 1/4W 10% R16,R19,R45,R49,R54,R55,R56,R60,R66,R67,R68,R75, R76,R78,R82,R95	RC07GF220K	16.000	EA
19	4410122	RES 100 OHM 1/4W 10% R20,R23,R24,R25,R26,R27,R28,R29,R30,R77,R79,R91, R92	RC07GF101K	13.000	EA
20	4410130	RES 120 OHM 1/4W 10% R70	RC07GF121K	1.000	EA
21	4410155	RES 180 OHM 1/4W 10% R10,R103	RC07GF181K	2.000	EA
22	4410205	RES 470 OHM 1/4W 10% R12,R14,R22	RC07GF471K	3.000	EA
24	4410239	RES 820 OHM 1/4W 10% R104,R105	RC07GF821K	2.000	EA
25	4410247	RES 1K OHM 1/4W 10% R47,R53,R57,R59,R65,R71,R74,R101	RC07GF102K	8.000	EA
26	4410262	RES 1.5K OHM 1/4W 10% R40	RC07GF152K	1.000	EA
27	4410270	RES 1.8K OHM 1/4W 10% R48	RC07GF182K	1.000	EA

REF NBR	COMPONENT ITEM NBR	COMPONENT DESCRIPTION & COMMENTS	ENG.DRAWING NO.	QUANTITY PER	UM
28	4410387	RES 12K OHM 1/4W 10% R50	RC07GF123K	1.000	EA
29	4410336	RES 4.7K OHM 1/4W 10% R11,R13,R15,R17,R18,R42,R43,R44,R52	RC07GF472K	9.000	EA
30	4410346	RES 5.6K OHM 1/4W 10% R72	RC07GF562K	1.000	EA
31	4410379	RES 10K OHM 1/4W 10% R64,R81,R83,R84,R85	RC07GF103K	5.000	EA
32	4410395	RES 15K OHM 1/4W 10% R97	RC07GF153K	1.000	EA
33	4410476	RES 68K OHM 1/4W 10% R51	RC07GF683K	1.000	EA
34	4410494	RES 100K OHM 1/4W 10% R58	RC07GF104K	1.000	EA
35	4410536	RES 220K OHM 1/4W 10% R46,R73	RC07GF224K	2.000	EA
36	4410304	RES 3.3K OHM 1/4W 10% R41	RC07GF332K	1.000	EA
38	4630729	POT CER PC PIN 5K OHM .75W 20T R1,R2,R3,R4,R5,R6,R7,R8,R9	43P502T000	9.000	EA
39	4510145	RES 10.0K OHM 1/8W 1% R61,R62,R63,R69	RN55C1002F	4.000	EA
40	4210035	CAP MICA DIP 3PF +/- 0.5 C29,C35	DM-15-030D	2.000	EA
41	4210043	CAP MICA DIP 5PF +/- 0.5 C23	DM-15-050D	1.000	EA
42	4210266	CAP MICA DIP 100PF 5% C27,C34	DM-15-101J	2.000	EA
43	4310074	CAP DISC CER 270PF C2,C14,C15,C16,C19,C20,C21,C22	DD-271	8.000	EA
44	4310272	CAP .01 50V X7R 10% C10,C11,C12,C13,C42,C45,C46,C50,C51,C53	5013EM50R0103K	10.000	EA
45	4310264	CAP .1 50V Z5U 20% C1,C9,C17,C18,C26,C28,C30,C31,C36,C37,C40,C41, C44,C52	5020CS50R0104M	14.000	EA
46	4280038	CAP TANT EPOX-DIP 1/35V 20% C24,C25,C32,C33	196D105X0035HA1	4.000	EA
47	4280046	CAP TANT EPOX-DIP 2.2/35V 20% C38	196D225X0035JA1	1.000	EA
48	4280053	CAP TANT EPOX-DIP 4.7/35V 10% C5	196D475X0035JA1	1.000	EA
49	4280137	CAP TANT EPOX-DIP 47/20V C3,C4,C5,C39	196D476X0020PE4	4.000	EA
50	4310280	CAP .001 100V C7,C8	C315C102M1R5CA	2.000	EA
51	3600145	DIO 1N4154 25V 4NS SI 0035 CR10,CR11,CR12,CR13,CR14,CR15,CR16	1N4154	7.000	EA
52	3390514	LED GRN 7-12820 DIFFUSED 75DEG CR1,CR2,CR3,CR4,CR5,CR6,CR7,CR8,CR22,CR23,CR24	HLMP-3507	11.000	EA
53	3390398	LED DUAL CR17,CR18	521-9177	2.000	EA

REF NBR	COMPONENT ITEM NBR	COMPONENT DESCRIPTION & COMMENTS	ENG.DRAWING NO.	QUANTITY PER	UM
54	3390580	LED DUAL (90) CR9	550-3006	1.000	EA
55	3390606	LED HOUSE P-C-LITE CR1,CR2,CR3,CR4,CR5,CR6,CR7,CR8,CR17,CR18,CR22, CR23,CR24	PCR 740 CTP	13.000	EA
56	3190758	SW OPUT (ON)-NONE-(ON) SW1	0601-210	1.000	EA
60	4020467	FERROX CUBE 500 OHM L1,L2,L3	VK200 10/3B	3.000	EA
62	3090347	CONN 4 PIN SNGL ROW RTANG HDR J1	87233-4	1.000	EA
63	3090222	CONN 12PIN SNGL ROW RTANG HDR J2	1-87233-2	1.000	EA
64	3090255	CONN 18PIN SNGL ROW RTANG HDR J3	1-87233-8	1.000	EA
65	3290152	JACK TEST WHITE R ANGLE TP1	430-101	1.000	EA
67	4410221	RES 680 OHM 1/4W 10% R39,R94,R96	RC07GF681K	3.000	EA

MUTE AND TRANSFER

Schematic 91C7271
Parts List 20D2820-1

The Mute and Transfer module contains the necessary logic to squelch the Receiver during periods of insufficient RF signal strength. This module also provides automatic changeover between two PCL-606 receivers when one is intended for hot standby service.

The Mute and Transfer module will go into the mute mode whenever pins 1, 2, 4, or 5 of U1 are in a TTL logic low state (0.0 V to +0.4 V). This will occur whenever one or more of the following conditions are present:

1. The front panel OPERATE/TRANSFER switch is in the TRANSFER position, forcing J1 pin 16 to a logic low level.

2. The signal mute line from the FM Demodulator module goes to a logic low level, forcing J1 pin 14 low.

3. The rear panel manual mute input (J18-8) is grounded, forcing J4 to a logic low level.

4. The rear panel auto transfer input (J18-7) is above +2.0 V. This signal will appear on J5, forcing the collector of Q1 to a logic low level.

When one of the above conditions is present, pin 6 of U1 will go to a TTL logic high state (+2.5 V to +5.0 V). This signal appears at J1 pins 12 and 13 and is sent to the Composite Baseband Processor module to activate the FET mute switch. This signal also drives the second half of U1, where it is inverted and sent to J1 pins 10 and 11 to control the front panel OPERATE status LED. Pin 8 of U1 also drives the first half of U2. When the receiver is muted, pin 5 of U2 will be at logic low. This signal exits the module on J6 and goes to the rear panel auto transfer output on J18-6.

Pin 6 of U1 also controls the relay driver (second half of U2). When the receiver is muted, pin 3 of U2 will go high and no current will flow through the coil of squelch relay K1. This condition is also true if power to the receiver is lost. In the mute mode, K1 disconnects the composite signal at J13 and the MUX signals at J15 from J12 and J2 respec-

tively. Also the arm and two unused contacts of K1 are connected to the rear panel (J18 pins 3 through 5) to activate alarms.

When two receivers are in service and the automatic transfer outputs and inputs are cross coupled (auto transfer output J18-6 from receiver A connected to auto transfer input J18-7 of receiver B and vice versa), the mute logic behavior is transformed from momentary to latching. The two Mute and Transfer modules thus connected form an RS flip-flop with the feedback being carrier over the cross-coupled transfer lines. When any momentary condition mutes a receiver, the other will gain and hold control until it experiences difficulty or is manually transferred with the front panel OPERATE/TRANSFER switch. Transfer can also be forced by momentarily muting the active receiver by grounding its rear panel manual mute input at J18-8.

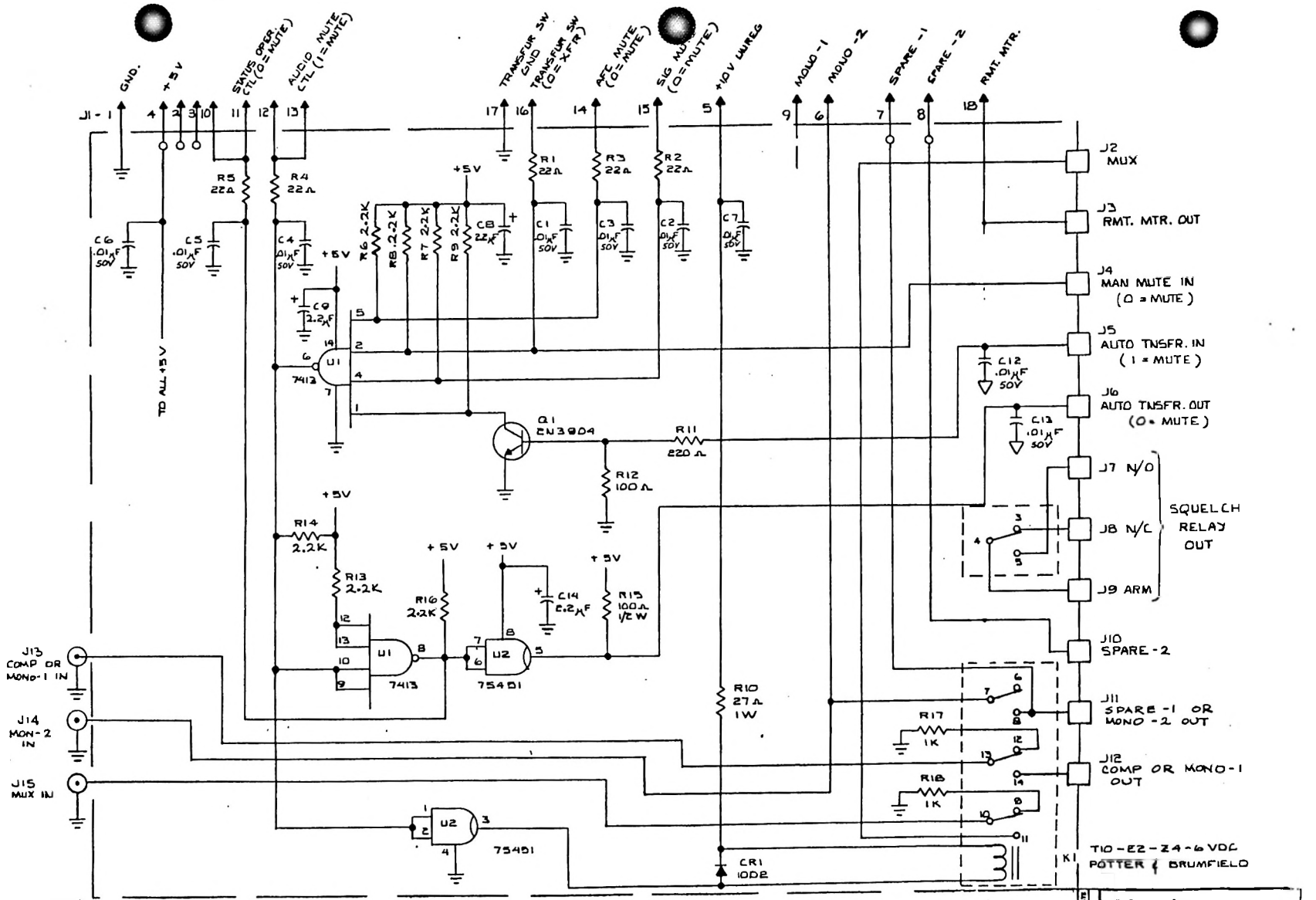

NOTES:

1. UNLESS OTHERWISE SPECIFIED RESISTOR VALUES ARE IN OHMS, 1/4W, 10% AND CAPACITOR VALUES UNLESS SPECIFIED ARE IN MICROFARADS.
2. P.C. BOARD 51C5936.
3. COMPONENT LAYOUT 20D2820

MOSELEY ASSOCIATES, INC.
111 CASTILIAN DRIVE
SANTA BARBARA, CA 93117-3093
(805) 968-9621

DATE: 1/19/87

PARENT ITEM: 9204181 DESCRIPTION: ASSY MUTE & TRANSFER PCL-606
ENG.DRAWING NO.: 20D2820-1 F

REF NOR	COMPONENT ITEM NBR	COMPONENT DESCRIPTION & COMMENTS	ENG.DRAWING NO.	QUANTITY PER	UM
	1560234	TBG TEFLON 22AWG NAT	TFT200-22	.150	FT
	1641927	W BUSS 22GA	298	.170	FT
	2202356	ASSY COAX SMB/RT SMB PCRT 12.5	2481093-3 B	2.000	EA
	3090255	CONN 18PIN SNGL ROW RTANG HDR	1-87233-8	1.000	EA
	3250016	SKT DUAL IN LINE 8 PIN	640463-1	1.000	EA
	3250024	SKT DUAL IN LINE 14 PIN	640357-1	1.000	EA
	3270337	RELAY 4PDT 6VDC	T10-E2-Z4-6VDC	1.000	EA
	3291085	PC JACK .040 PIN	09-9064-1-06	11.000	EA
	3473105	PCB MUTE & TRANSFER PCL-606	51C5936 E	1.000	EA
	3610003	DIO 10D2 200V 1A SI D039	10D2	1.000	EA
	3630456	XT 2N3904	2N3904	1.000	EA
	3660115	IC SN7413N DU 4I NAND ST	SN7413N	1.000	EA
	3660917	IC SN75451P DU AND HIGHV OC	SN75451BP	1.000	EA
	4260046	CAP TANT EPOX-DIP 2.2/35V 20%	196D225X0035JA1	3.000	EA
	4310272	CAP .01 50V X7R 10%	5018EM50RD103K	9.000	EA
	4410049	RES 22 OHM 1/4W 10%	RC07GF220K	5.000	EA
	4410122	RES 100 OHM 1/4W 10%	RC07GF101K	1.000	EA
	4410163	RES 220 OHM 1/4W 10%	RC07GF221K	1.000	EA
	4410247	RES 1K OHM 1/4W 10%	RC07GF102K	2.000	EA
	4410288	RES 2.2K OHM 1/4W 10%	RC07GF222K	7.000	EA
	4420147	RES 100 OHM 1/2W 10%	RC20GF101K	1.000	EA
	4430104	RES 27 OHM 1W 10%	RC32GF270K	1.000	EA

RECEIVER POWER SUPPLY

Schematic 91C7380
Parts List 20C2943
21D2850

The Receiver Power Supply module consists of three subassemblies: the ac power connector, step-down transformer T1, and the regulator PC board.

CAUTION

Failure to ground the third lead of the input power cord may result in hazardous shocks to personnel.

The ac power connector includes an RF filter. The transformer primary windings can be wired one of four different ways, which allows the user to select one of the four input voltage ranges listed below:

Nominal Voltage (rms)	Minimum Voltage (rms)	Maximum Voltage (rms)	Line Fuse
100	90	100	1 A (factory set)
120	108	132	1 A
220	198	242	0.5 A
240	216	264	0.5 A

The transformer has two primary windings which are placed in parallel for 120 Vac operation and in series for 240 Vac operation. One winding is tapped for 100 Vac or 220 Vac operation.

If the operating voltage is changed, change the fuse to agree with the above list.

The Receiver Power Supply provides three regulated voltages (+15 V, -15 V, and +5 V) and one unregulated voltage (+9 V). The voltage ranges and current limits of the power supplies are listed below:

Supply	Voltage Range	Current
+15 V (J9)	14.25 to 15.75	0.50 A
-15 V (J7)	-14.25 to -15.75	0.50 A
+5 V (J10)	4.75 to 5.25	0.50 A
+9 V (J4)	7.2 to 10.8	0.16 A (typical)

Note: The +9 V supply provides about .50 ampere at initial turn-on. The additional power is required to heat the crystal oven in the first local oscillator. About 30 to 45 seconds after turn-on, this current should decrease to the nominal value of 0.16 A.

CR5 and CR9 form a full-wave bridge rectifier to produce +9V unregulated. The unregulated supply is used to provide power to the Mute and Transfer relay and to the crystal oven in the first local oscillator. R1 acts as a fusible resistor in the event the +9 V unregulated supply is inadvertently grounded.

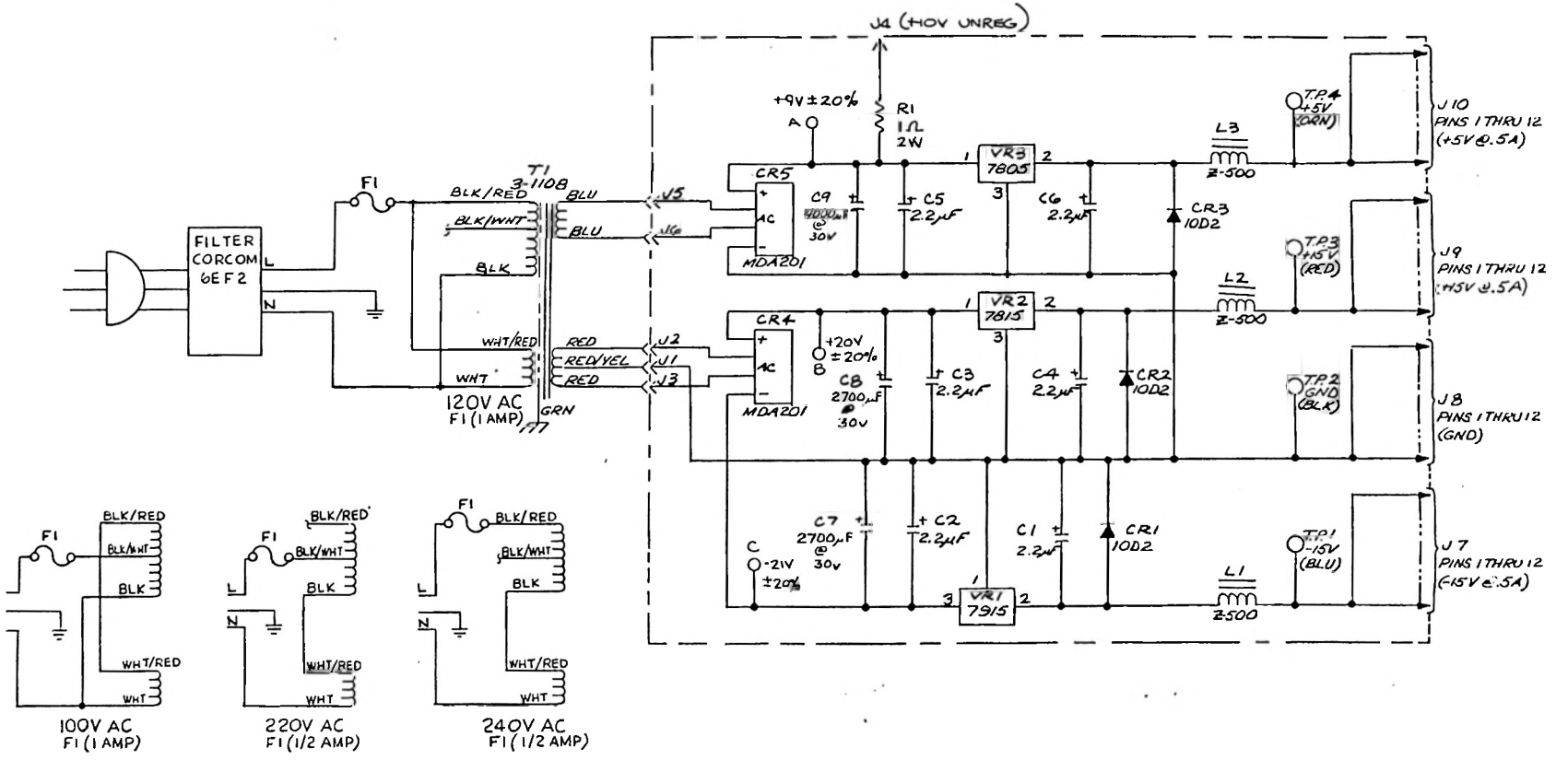

NOTES

1. PC BOARD 51C6046
2. COMPONENT LAYOUT 20C2943

Moseley

Schematic
Power Supply - Rcvr PCL - 606

SCALE:

91C7380 B

MOSELEY ASSOCIATES, INC.
111 CASTILIAN DRIVE
SANTA BARBARA, CA 93117-3093
(805) 968-9621

DATE: 1/19/87

PARENT ITEM: 9205139 DESCRIPTION: ASSY PC POWER SUPPLY RCVR
ENG.DRAWING NO.: 20C2943 B

REF NBR	COMPONENT ITEM NBR	COMPONENT DESCRIPTION & COMMENTS	ENG.DRAWING NO.	QUANTITY PER	UM
1	3473873	PCB POWER SUPPLY RCVR	51C6046 A	1.000	EA
3	4260046	CAP TANT EPOX-DIP 2.2/35V 20% C1,C2,C3,C4,C5,C6	196D225X0035JA1	6.000	EA
4	4270047	CAP PWR LYTIC 4000/30V C9	36DX402G030AA2A	1.000	EA
5	4260287	CAP LYTIC 2700/35V C7,C8	LP2725035CIP3	2.000	EA
7	4590063	RES 1 OHM 2W 5% R1	BWH 1 2W 5%	1.000	EA
9	3610003	DIO 1002 200V 1A SI D039 CR1,CR2,CR3	1002	3.000	EA
10	3610078	DIO BRIDGE 100V 2A CR4,CR5	MDA-201	2.000	EA
12	3650223	RGLTR UA7915UC 15V 1.5A TO220 VR1	7915UC	1.000	EA
13	3650207	RGLTR UA7815UC 15V 1.5A TO220 VR2	7815UC	1.000	EA
14	3650173	RGLTR UA7805UC 05V 1.0A TO220 VR3	UA7805UC	1.000	EA
16	4020467	FERROX CUBE 500 OHM L1,L2,L3	VK200 10/3B	3.000	EA
17	1150010	SCR BOH SLTD 10-32 X 1/4		2.000	EA
18	3290087	TEST PT BLUE VERT TP1	105-0860-001	1.000	EA
19	3290020	TEST PT BLK VERT TP2	105-0853-001	1.000	EA
20	3290046	TEST PT RED VERT TP3	105-0852-001	1.000	EA
21	3290053	TEST PT ORANGE VERT TP4	105-0856-001	1.000	EA
25	3090271	CONN 12PIN SNGL ROW STR HDR J7,J8,J9,J10	1-87224-2	4.000	EA
27	3290830	LUG GND J1,J2,J3,J4,J5,J6	830	6.000	EA
28	1150127	WSHR LK #10 INTL T		6.000	EA

MOSELEY ASSOCIATES, INC.
111 CASTILIAN DRIVE
SANTA BARBARA, CA 93117-3093
(805) 968-9621

DATE: 1/19/87

PARENT ITEM: 9104803 DESCRIPTION: ASSY POWER SUPPLY RCVR
ENG.DRAWING NO.: 21D2850 A

REF NBR	COMPONENT ITEM NBR	COMPONENT DESCRIPTION & COMMENTS	ENG.DRAWING NO.		QUANTITY PER	UM
1	2032324	CHASSIS POWER SUPPLY RCVR	05C3145	A	1.000	EA
2	9205139	ASSY PC POWER SUPPLY RCVR	20C2943	B	1.000	EA
3	4090437	XFMR 8-P-98 T1	3-1108	C	1.000	EA
7	3370251	FUSE 1 AMP SLOW-BLO F1	MDL 1		1.000	EA
8	3110004	CONN FASTON .250IN CRIMP INSUL J1,J2,J3,J5,J6	2-35-0804-2		5.000	EA
9	3370343	HLDR FUSE SHORT 342004A	342004A		1.000	EA
10	1090109	CLIP NUT 5/32	SL-210-06-2		4.000	EA
11	1090208	SCR PNH PHPS 6-32 X 3/8 SST			4.000	EA
12	1560069	TBG SHRINK 1/2" CLEAR	FIT 221 1/2CL		.150	FT
13	1050129	SCR PNH PHPS 4-40 X 1/4 SST			7.000	EA
14	3430371	LBL HIGH VOLTAGE SYMBOL	10A1058-2	A0	1.000	EA
15	1050152	SCR PND PHPS 4-40 X 3/8 SST			2.000	EA
16	1050582	NUT HEX 4-40 SM PATT SST			5.000	EA
17	1050624	WSHR LK #4 INTL T CD PL			5.000	EA
18	3370053	CONN PWR W/FILTER 6EF2	6EF2		1.000	EA
19	1560028	TBG SHRINK 1/8" CLEAR	FIT 221 1/8CL		.160	FT
20	1641455	W STRD 16GA BLACK 26/30	1557 BLACK		.250	FT
21	1641505	W STRD 16GA GREEN 26/30	1557 GREEN		.125	FT
22	1560036	TBG SHRINK 3/16" CLEAR	FIT 221 3/16CL		.100	FT
23	1050665	WSHR SHLDR #4 NYL	B51547F019		3.000	EA
24	1290186	SIL PAD	7403-09-FR-51		3.000	EA

SECTION 6

ALIGNMENT PROCEDURES

6.1 INTRODUCTION

This section presents the alignment procedures for the PCL-606/C and a list of recommended test equipment. Also included are descriptions of all module adjustments, general troubleshooting information, and test fixture diagrams. Relevant troubleshooting information is included at the end of each alignment procedure.

6.2 TEST EQUIPMENT

Table 6-1 lists the test equipment recommended for use in the alignment procedures. Equivalent items of test equipment may also be used.

6.3 ALIGNMENT PROCEDURES

The PCL-606/C alignment procedures include the following:

1. STL frequency alignment
2. Receiver sensitivity
3. Receiver selectivity
4. Transmitter deviation and receiver output level calibration
5. Ultimate signal-to-noise ratio
6. Distortion alignment
7. Stereo separation and signal-to-noise ratio
8. Stereo crosstalk

Table 6-1. Recommended test equipment.

INSTRUMENT TYPE	COUNTER
SUGGESTED MODEL	Tektronix DC-508A 1.3 GHz Counter Note: For dual links on the same frequency, include Option 01
CRITICAL SPECIFICATION	Single Link +/-5 ppm Dual Link +/-0.2 ppm
INSTRUMENT TYPE	DIRECTION COUPLER
SUGGESTED MODEL	Microlab/FXR CB-49B
CRITICAL SPECIFICATION	30 dB 1.0 - 2.0 GHz
INSTRUMENT TYPE	ATTENUATOR 50-OHM LOAD
SUGGESTED MODEL	Philco 662A-30 or Sierra 661A-30
CRITICAL SPECIFICATION	50 Ohm, 30 dB
INSTRUMENT TYPE	ATTENUATOR, ADJUSTABLE
SUGGESTED MODEL	Kay Elemetrics Model 432D
CRITICAL SPECIFICATION	50 Ohm; 1, 2, 3, 5, 10 & 20 dB steps
INSTRUMENT TYPE	RF SIGNAL GENERATOR
SUGGESTED MODEL	Hewlett-Packard Model 8640B w/Option 01 & 02
CRITICAL SPECIFICATION	Freq. Range: 0.5 MHz - 1024 MHz Residual FM: Less than 30 Hz, 20 Hz - 15 kHz; Less than 10 Hz, 300 Hz - 3 kHz Output Level Accuracy: +/-3.5 dB -7 to -47 dBm; +/-4.0 dB -47 to -137 dBm Output Impedance: 50 Ohm FM Deviation Bandwidth: dc to 250 kHz
INSTRUMENT TYPE	DISTORTION MEASUREMENT
SUGGESTED MODEL	Hewlett-Packard Model 339A or Tektronix AA501 with SG505 and TM503 Main Frame

CRITICAL SPECIFICATION	Distortion Measurement Residual Noise: -92 dB (80 kHz) Input Impedance: 100k Ohm shunted by less than 100 pF Accuracy: 20 Hz to 20 kHz +/-2% 10 Hz to 110 kHz +/-4% Oscillator Frequency Range: 10 Hz - 110 kHz Output Level: 3 V rms into 600 Ohm Distortion: 10 Hz - 20 kHz -95 dB (0.00187%) THD
INSTRUMENT TYPE	AUDIO OSCILLATOR
SUGGESTED MODEL	Hewlett-Packard 204C
CRITICAL SPECIFICATION	600 Ohm output frequency range 100 k Hz to 200 kHz
INSTRUMENT TYPE	RF SPECTRUM ANALYZER 3 GHZ
SUGGESTED MODEL	Hewlett-Packard Model 8559A with 18IT display
CRITICAL SPECIFICATION	Frequency Band: 0.01-3 Dynamic Range: 0.01 to greater than 70 dB Display Range: Log 10 dB/div and 1 dB/div Display Accuracy: Log Less than 2 dB over full range Input Impedance:50 Ohm SWR: 1.3 dB 10 dB input attenuation
INSTRUMENT TYPE	AUDIO SPECTRUM ANALYZER
SUGGESTED MODEL	Tektronix 7L5 w/Option 25 & L3 Plug -in 7603 Main Frame
CRITICAL SPECIFICATION	Input Impedance: 1 M Ohm/28 pF Input Frequency: 10 Hz to less than 500 kHz Display Range: 80 dB, log 10 dB/div
INSTRUMENT TYPE	POWER METER AND SENSOR
SUGGESTED MODEL	Hewlett-Packard 435A w/8481A Power Head
CRITICAL SPECIFICATION	Accuracy: +/-1% of full scale Power Range: -25 dBm (3 MicroW) to +20 dBm (100 mW) full scale

INSTRUMENT TYPE	STEREO GENERATOR
SUGGESTED MODEL	RCA BTS-101A
CRITICAL SPECIFICATION	Stereo SNR: 75 dB Separation: 55 dB THD: 0.1% or less

INSTRUMENT TYPE	STEREO DEMODULATOR
SUGGESTED MODEL	QEI Model 691
CRITICAL SPECIFICATION	Stereo SNR: 75 dB Separation: 55 dB THD: 0.05% or less

INSTRUMENT TYPE	OSCILLOSCOPE
SUGGESTED MODEL	Tektronix T932A
CRITICAL SPECIFICATION	Bandwidth: 35 MHz

INSTRUMENT TYPE	MULTIMETER
SUGGESTED MODEL	Data Precision Floating input Model 935

INSTRUMENT TYPE	50 Hz FILTER
SUGGESTED MODEL	Figure 6-15

INSTRUMENT TYPE	75 Micro-s DE-EMPHASIS NETWORK
SUGGESTED MODEL	Figure 6-16

INSTRUMENT TYPE	AUDIO AMPLIFIER
SUGGESTED MODEL	Figure 6-17

INSTRUMENT TYPE	STEREO SOURCE SELECTOR
SUGGESTED MODEL	Figure 6-18

6.3.1 STL Frequency Alignment

Specification:

+/-0.00025%, 0 to 50 C (+/-2.375 kHz at 950 MHz)
+/-500 Hz at 25 C (77 F)

Description:

The STL frequency is aligned by using a counter to measure the transmitter output frequency and the receiver first local oscillator frequency. A high-precision counter (+/- 0.2 ppm) is recommended to align STL links that are used in a redundant installation. If such a counter is not available, we recommend that both STL systems be aligned at the same time using the same counter. A difference greater than 2 kHz between the STL transmitter center frequency and receiver center frequency will result in degradation of the distortion, separation, and crosstalk performance.

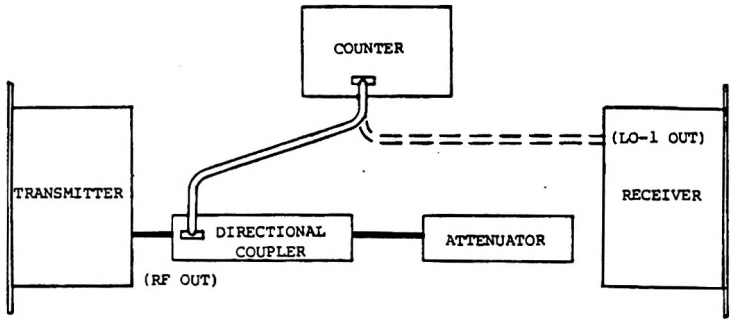

CAUTION: Place the transmitter RADIATE/STANDBY switch in STANDBY until the coupler and attenuator are connected.

Figure 6-1. Test setup for frequency alignment.

Test Equipment:

Name	Manufacturer	Model
Counter	Tektronix	EC-508A w/ option 01
Directional Coupler	Microlab/FXR	CB-49N
Attenuator, Load	Philco	662A-30

Procedure:

1. Connect the equipment as shown in Figure 6-1.

2. Position the transmitter RADIATE/STANDBY switch to the RADIATE position. Verify that the RADIATE, AFC LOCK, and +12 V status LEDs are green.

   Using the METER FUNCTION switch, select the FWD POWER position. Verify that the front panel meter reads between -3 and +2 dB on the top scale.

3. Check the serial number label on the back of the STL transmitter for its operating center frequency. The counter should indicate the frequency within 8 kHz of the specified center frequency. If it does not, proceed to the troubleshooting portion of this procedure and verify that the First LO and FMO are operating at their specified frequencies.

4. While monitoring the counter, adjust the Transmitter First LO frequency adjustment for a reading of the specified transmitter frequency +/-200 Hz.

5. Using the METER FUNCTION switch on the STL receiver, select the LO 1 position. Verify that the indication is within the lower arc on the receiver front panel meter.

6. Calculate the receiver first LO frequency by adding 70 MHz to the frequency specified on the serial number label at the back of the PCL-606/C Receiver.

7. Connect a frequency counter to the output of the receiver first LO. (Note: If an adapter is not available, the MUX 1 connector may be temporarily removed from the transmitter for this purpose.) The counter should indicate a frequency within +/-8 kHz of the frequency calculated in Step 6. If it does not, proceed to the troubleshooting portion of this procedure.

8. Using the counter, adjust the receiver First LO frequency adjustment for a reading within +/-200 Hz of the frequency calculated in Step 6.

Note: If two STL systems are installed for redundant operation, both should be aligned for frequency at the same time.

Troubleshooting:

1. The crystal in the transmitter First Local Oscillator should be 102.000 MHz.

2. The crystal frequency of the Receiver First LO should be the same as that specified on the serial number label on the back of the PCL-606 Receiver.

3. If the First LO fails to meet the +/-8 kHz specified in this procedure, the crystal oven should be checked to ensure that it is operating at 65°C +/-5°C.

4. If the transmitter frequency fails to meet the +/-8 kHz specified in this procedure and the First LO appears to be operating to specification, the FMO should be checked to ensure that it is operating at its designed frequency. The FMO frequency may be calculated as follows:

   FMO frequency = 1020 MHz minus the transmitter center frequency

   The FMO frequency should be within +/-1 kHz of the value calculated.

5. A red AFC lock status will inhibit the green +12 V power supply status indicator and cause the RADIATE status indicator to remain red.

6.3.2 Receiver Sensitivity

Specification:

30 Micro-V (43 uV narrowband) or less for 60 dB SNR broadband, de-emphasized

150 Micro-V (210 uV narrowband) or less for 60 dB SNR left or right channel demodulated stereo, de-emphasized.

Description:

The sensitivity of the PCL-606 STL Receiver is verified using a signal generator and either a de-emphasis network or a de-emphasized stereo demodulator.

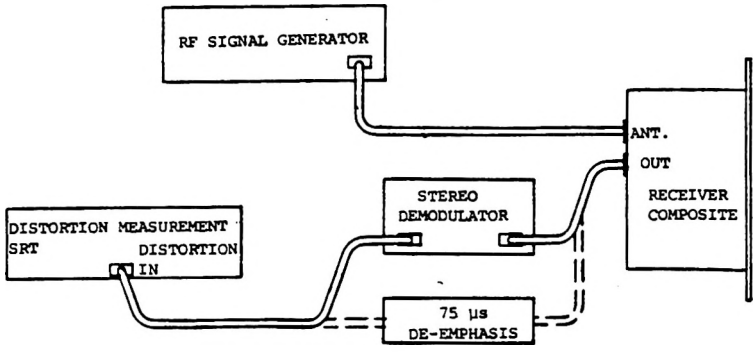

Figure 6-2. Sensitivity test setup.

Test Equipment:

Name	Manufacturer	Model
RF Signal Generator	Hewlett-Packard	HP-8640B
75 Micro-s DeEmphasis Network	(See Figure 6-16)	
Stereo Demodulator	QEI	Model 691
Distortion Measurement Set	Hewlett-Packard	HP-339A

Procedure:

1. Connect the equipment as shown in Figure 6-2 and set the controls on the signal generator as follows:

Meter Level	Volts
AM Modulation	Off
FM Deviation	Off
Range MHz	1024/512
Frequency Tuned	Tuned to center frequency (indicated on serial number label on back of STL receiver).

Output Level	-40 dBm
RF	On

Adjust the output level on the signal generator for a reading of 3 mV on the signal generator meter.

2. Using the METER FUNCTION switch on the PCL-606 Receiver, select the RF LEVEL meter position. Verify that the meter reads within the 3K range of the middle scale. If it does not, verify that TP1 on the Pre-amplifier and First Mixer module is between -14 and -16 V prior to troubleshooting.

3. While monitoring the center scale of the receiver meter, switch the OUTPUT LEVEL ADJ on the signal generator from -40 to -110 and verify that the signal strength reads within the meter range for each setting. If it does not, proceed to paragraph 6.4.N, FM Demodulator Log Gain Adjust, prior to continuing the test, and perform the calibration adjustments given there.

4. Using the METER FUNCTION switch on the receiver, select the PGM LEVEL position.

   Set the FM Deviation on the RF Signal generator to ON.

   Set the modulation frequency on the signal generator to 400 Hz.

   Adjust the deviation control on the signal generator so that the meter on the STL receiver reads 0 dB on the top scale. Verify that the deviation on the signal generator reads 50 +/-8 kHz (35 kHz narrowband).

5. Set the controls on the distortion measurement equipment for a 0 dB reference.

   Set the FM Deviation on the RF signal generator to OFF.

   Position the controls on the distortion measurement equipment for a reading of 60 dB SNR.

   Reduce the RF LEVEL adjustment on the RF signal generator until the distortion measurement equipment reads 60 dB.

   Observe the RF level output of the signal generator; it should indicate less than 150 Micro-V (210 uV narrowband).

6. Set the controls on the distortion measurement equipment for a signal-to-noise ratio of 40 dB.

   Reduce the RF level on the signal generator until the mute threshold LED on the FM Demodulator module indicates red. Observe the RF level output of the signal generator; it should indicate between 18 and 22 Micro-V. If not, the MUTE THRESHOLD ADJ on the FM Demodulator module should be rotated fully counter-clockwise. Then set the RF level output of the signal generator to 20 Micro-V and adjust the MUTE THRESHOLD ADJ until the mute threshold LED changes from off to red.

   Note: This completes the testing for sensitivity if the STL receiver is used in a composite link.

7. Broadband De-emphasized SNR

   Replace the stereo demodulator with a 75 Micro-s de-emphasis network (see Figure 6-16.). Repeat the above steps 1 through 6 with the following exception:

   The specification for 60 dB signal-to-noise ratio is 30 Micro-V (43 uV narrowband) or less.

Troubleshooting:

1. The cable between the RF signal generator and the STL receiver should be kept at a minimum to reduce insertion loss. As an example, a 3-foot cable (RG-58) will cause a 1 dB or 10% loss in signal.

2. Prior to troubleshooting, verify that the RF GAIN ADJ on the Preamplifier and First Mixer module is fully clockwise and that TP1 reads between -14 and -16 volts.

3. Verify the RF gain distribution outlined in paragraph 6.5.2, step 5 (General Trouble shooting Information).

6.3.3 Receiver Selectivity

Specification:

Bandwidth	Wideband	Narrowband
3 dB	+/-100 kHz	+/-75 kHz
60 dB	+/-450 kHz	+/-350 kHz
80 dB	+/-1 MHz	+/-1 MHz

Description:

The STL link selectivity is determined by positioning the 2ND 10.7 MHz bandwidth select jumpers E2 and E3 located on the receiver Double Converter module. Unless otherwise specified on the purchase order, the system will be in wideband mode.

Changing the STL receiver selectivity affects the distortion, stereo separation, stereo crosstalk, and multiplex output performance of the STL link.

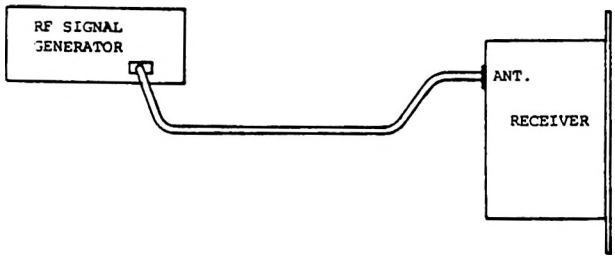

Figure 6-3. Selectivity test setup.

Test Equipment:

RF Signal Generator — Hewlett-Packard 8640B

Procedure:

1. Connect the equipment as shown in Figure 6-3. Set the controls on the signal generator as follows:

Meter Level	Volts
AM Modulation	Off
FM Deviation	Off
Range MHz	1024/512
Frequency Tuned	Tuned to the center frequency (indicated on the serial number label on the back of the STL receiver).
Output Level	-40 dBm
RF	On

   Adjust the output level on the signal generator for a reading of 3 mV on the signal generator meter.

2. Using the receiver METER FUNCTION switch, select the RF LEVEL meter position. Verify that the meter reads within the 3K range of the middle scale.

3. Position the OUTPUT LEVEL switch on the signal generator to -100. Verify that the receiver meter reads within the 3 Micro-V range on the center scale. Note the position of the meter reading as a reference for the -60 dB point.

4. Position OUTPUT LEVEL on the signal generator to -40. Increase the frequency on the signal generator until the meter reading on the receiver front panel is the same as the value noted in paragraph 3. Subtract the carrier frequency from the value indicated on the signal generator. The value calculated indicates the positive -60 dB point.

5. Decrease the frequency on the signal generator until the meter reads the same as the value noted in paragraph 3. Subtract the frequency indicated on the signal generator from the center frequency. This value indicates the negative -60 dB bandwidth point.

Troubleshooting Notes:

The cable between the RF signal generator and the STL receiver should be kept at a minimum to reduce insertion loss. As an example, a 3-foot cable (RG-58) will cause a 1 dB or 10% loss in signal.

Use of the RF gain adjustment on the Preamplifier and 1st Mixer module may cause the meter reading to be less than 3 mV. In this event, the RF gain should be reset to 15 on the bottom meter.

6.3.4 Transmitter Deviation, and Receiver Output Level Calibration

Specification:

Transmitter: 3.5 V p-p composite input equals +/-50 kHz deviation in wideband mode and +/-35 kHz deviation in narrowband mode.

1.5 V p-p MUX 1 equals +/-5 kHz deviation wideband and +/-3.5 kHz deviation narrowband.

1.5 V p-p MUX 2 equals +/-7.5 kHz deviation wideband and +/-5.25 kHz deviation narrowband.

Receiver: Composite output equals 3.5 V p-p with 50 kHz deviation wideband or 35 kHz deviation narrowband (30 Hz - 80 kHz).

MUX output equals 1.5 V p-p for 5.0 kHz deviation wideband or 3.5 kHz deviation narrowband (80 kHz - 190 kHz).

Description:

The deviation and modulation sensitivity of the composite information is aligned using a Bessel null function as a reference. The MUX channel is aligned using an RF generator as a reference.

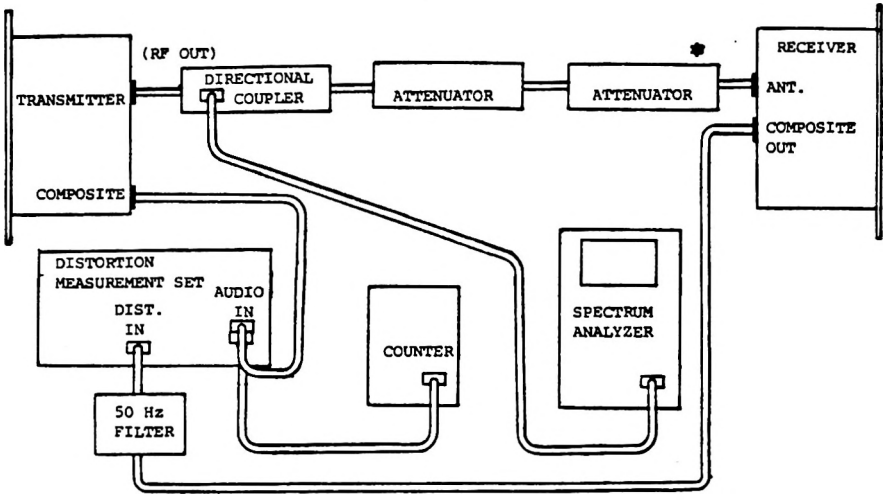

CAUTION: Place the transmitter RADIATE/STANDBY switch in STANDBY until the coupler and attenuator are connected.

*CAUTION: To avoid receiver damage, initially set attenuator for maximum attenuation.

Figure 6-4. Test setup for deviation alignment.

Test Equipment:

Counter	Tektronix DC-508A
Directional Coupler	Microlab FXR CB49N
Attenuator, 50 Ohm Load	Philco 662A-30
Attenuator, Adjustable	Kay Elemetrics 432D
RF Signal Generator	HP-8640B
Distortion Measurement Set	HP-339A
Audio Oscillator	HP-204C
Spectrum Analyzer	HP-8559A
50 Hz Filter	(See Figure 6-15)
Oscilloscope	Tektronix T932A

Procedure:

NOTE: This procedure is for wideband alignment. If narrowband operation is desired, put FMO/Synth jumper E1 in the (WB) position and proceed with the test. When finished, return the jumper to the (NB) position.

1. Connect the equipment as shown in Figure 6-4.

2. Adjust the audio oscillator of the distortion measurement set for an output voltage of 1.25 V rms (3.5V p-p) at 20.79 kHz as follows:

   a. Position the meter function switch to the oscillator level position and adjust the oscillator level controls for a reading of 1.25 V rms on the meter.

   b. Using the counter to monitor the oscillator frequency, position the frequency controls for a reading of 20.79 kHz.

3. Position the STL transmitter RADIATE/STANDBY switch to the RADIATE position.

   Using the METER FUNCTION switch, select the FWD POWER position and verify that the meter reads -3 dB and +2 dB on the top scale.

4. Using the spectrum analyzer, monitor the modulated RF output of the STL transmitter. The controls of the spectrum analyzer should be in the following positions:

Frequency Band GHz	01-3
Time/DIV	Auto
Trigger	Free run
FREQ/SPAN/DIV	50 kHz/DIV with 3 kHz bandwidth
Input ATTEN	30
REF Level	-20
10 dB/DIV	Depress
Tuning	STL transmitter center frequency

5. Disconnect the BNC connector from the composite input of the transmitter and adjust display on the spectrum analyzer so that the waveform is at the top graticule (see Figure 6-5A).

   Reconnect the BNC connector to the composite audio input of the STL transmitter. The display on the spectrum analyzer should be similar to Figure 6-5A.

   Adjust PGM Level Adjust R31 on the Composite Audio Processor module for a Bessel null function of at least -50 dB on the spectrum analyzer.

   Using the METER FUNCTION switch on the STL transmitter, select the PGM LEVEL function. Adjust R3 on the STL transmitter Metering and Status board for a reading of 0 dB on the top scale of the meter.

6. Using the METER FUNCTION switch on the STL receiver, select the RF LEVEL position.

   Position the switches on the adjustable attenuator for an RF level reading between 1K and 3K V on the receiver meter.

   Set the controls on the distortion measurement set as follows:

Meter Function	Reference level
Frequency	1.0 kHz
Meter Input Range	+10 dB

   With the oscillator output connected to the STL transmitter, connect the meter input in parallel with the oscillator output and adjust the Relative Adjust for a 0 dB reference on the distortion measurement set.

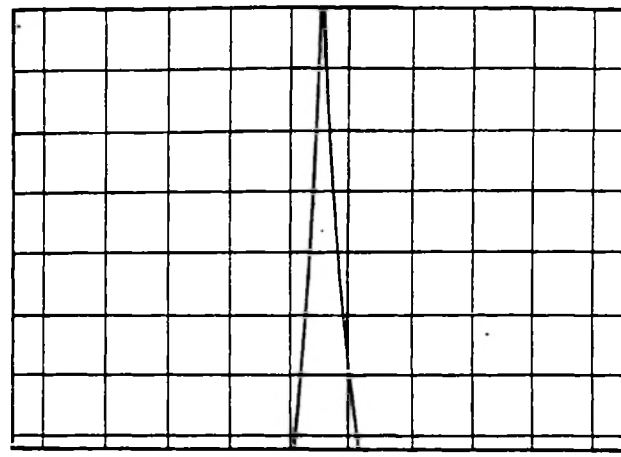

(A)

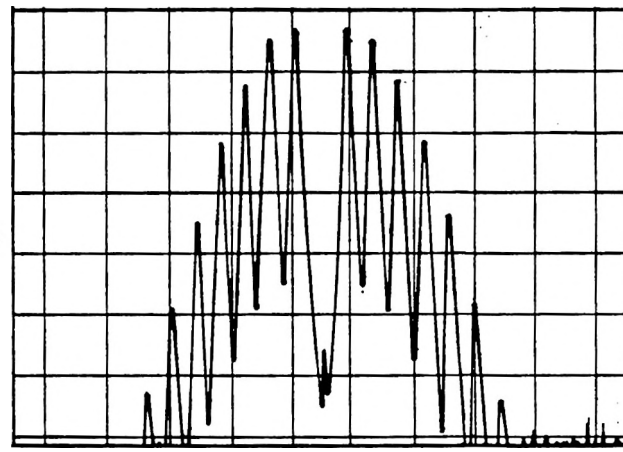

(B)

Vert = 10 dB/Div
Hor = 50 kHz/div and
3 kHz bandwidth

Figure 6-5
Bessel Null Function Waveforms

Reconnect the distortion input to the composite output of the STL receiver.

On the receiver FM Demodulator module, adjust Baseband Level Adjust R10 for a reading of 0 dB on the distortion measurement set. Using the receiver METER FUNCTION switch, select the PGM LEVEL position and adjust R1 on the Metering and Status board for a reading of 0 dB on the top scale.

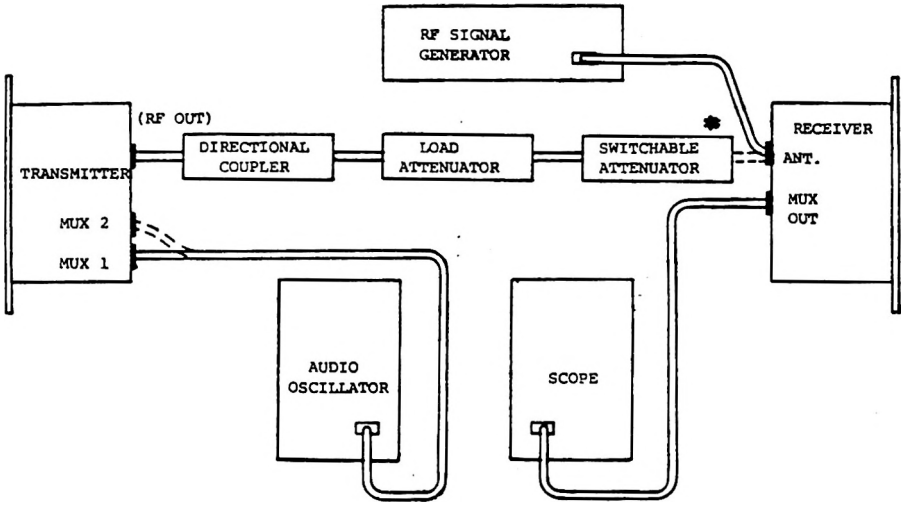

CAUTION: Place the transmitter RADIATE/STANDBY switch in STANDBY until the coupler and attenuator are connected.

*CAUTION: To avoid receiver damage, initially set attenuator for maximum attenuation.

Figure 6-6. Test setup for MUX channel alignment

7. Position the STL transmitter RADIATE/STANDBY switch to the STANDBY position.

   Connect the equipment as shown in Figure 6-6 and adjust the controls on the RF signal generator as follows:

Meter Function	FM
AM	Off
Modulation Frequency	110 kHz

FM	INT
Peak Deviation	10 kHz
Range	1024/512 MHz
Output Level	-40
Frequency Tune	Tune to the center frequency (specified on serial number label of STL receiver).
Peak Deviation	Adjust FM control for a meter reading of 5 kHz.

While monitoring the oscilloscope, adjust MUX Level. Adjust R31 on the STL receiver Composite Baseband Processor module for a reading of 1.5 V p-p.

Using the receiver METER FUNCTION switch, select the MUX LEVEL position.

Adjust R2 on the Receiver Metering and Status board for a reading of 5 on the lower scale of the receiver meter.

8. On the RF signal generator, adjust the modulation frequency to 185 kHz and the FM deviation for 7.5 kHz.

   Note the reading on the receiver meter. It should be between 6 and 8 on the lower scale. This reading will be used as a reference to align the transmitter MUX 2 deviation. Connect the output of the adjustable attenuator to the RF input of the STL receiver.

9. Position the STL transmitter RADIATE/STANDBY switch to the RADIATE position.

   Using the scope, adjust the output of the audio oscillator for a voltage of 1.5 V p-p and a frequency of 110 kHz. Connect the audio oscillator output to the MUX 1 input of the STL transmitter.

   Adjust the MUX 1 Level Adjust R28 on the Transmitter Composite Audio Processor module for a reading of 5 on the lower scale of the receiver meter.

   Using the transmitter METER FUNCTION switch, select the MUX LEVEL position.

Adjust R4 on the transmitter Metering and Status board for a reading of 5 on the meter lower scale.

Connect the audio oscillator to the transmitter MUX 2 input and adjust the oscillator to a frequency of 185 kHz.

Using the receiver meter as a reference, on the transmitter Composite Audio Processor module, adjust MUX 2 Level Adjust R24 for the reading noted in paragraph 8. The meter reading on the transmitter front panel should be between 6 and 8 on the lower scale.

Troubleshooting:

1. When aligning STL systems as a dual or redundant installation, one STL transmitter should be used as a reference. In this case, the second STL transmitter would be aligned using the first STL receiver as a reference. The second STL receiver would be aligned using the first STL transmitter as a reference. As a final verification, the second STL transmitter would be checked using the second STL receiver. Using any combination of transmitter and receiver, the composite band should be flat within +/-0.1 dB. The results from the multiplex band measurements should be within 10%.

2. The multiplexed output is lowest when the carrier center frequency of the transmitter and receiver are identical. This phenomenon is more pronounced when the STL receiver is in the narrow I.F. mode.

6.3.5 Ultimate Signal-to-Noise Ratio

Typical Values:

Ultimate wideband SNR	65 dB or better (62 dB narrowband)
75 Micro-s de-emphasized	76 dB or better (73 dB narrowband)

Description:

The STL ultimate wideband (50 Hz to 80 kHz) and 75 Micro-s de-emphasized SNR are verified using a distortion measurement set. Stereo SNR is verified during the stereo separation test (paragraph 6.3.7), and the STL receiver SNR (quieting) is verified during the receiver sensitivity test (paragraph 6.3.2).

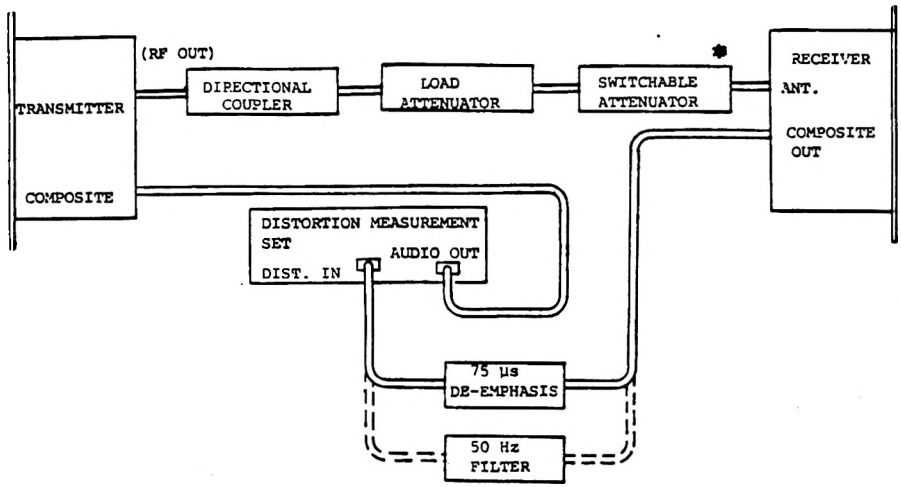

CAUTION: Place the transmitter RADIATE/STANDBY switch in STANDBY until the coupler and attenuator are connected.

*CAUTION: To avoid receiver damage, initially set attenuator for maximum attenuation.

Figure 6-7. Test set-up for signal-to-noise ratio measurement

Test Equipment:

Directional Coupler	Microlab/FXR CB-49N
Attenuator, 50 Ohm Load	Philco, 662A-30
Attenuator, Adjustable	Kay Elemetrics Corp., 432D
Distortion Measurement Set	Hewlett-Packard, HP-339A
50 Hz High Pass Filter	(See Figure 6-15)
75 Micro-s DeEmphasis Network	(See Figure 6 16)

Procedure:

1. Connect the equipment as shown in Figure 6-7 and set the controls on the distortion measurement set as follows:

Meter Function	REF Level
Meter Input	+10 dBm
Frequency	400 Hz

2. Set the controls on the STL transmitter as follows:

RADIATE/STANDBY	RADIATE (Radiate LED green)
METER FUNCTION	PGM LEVEL

3. Using the METER FUNCTION switch on the STL receiver, select the PGM LEVEL position.

4. Adjust the oscillator output level on the distortion measurement set for a reading of 0 dB on the top scale of the transmitter meter.

   Rotate the REFERENCE ADJUST on the distortion measurement set for a 10 dB reference on its front-panel meter. Disconnect the composite input at the STL transmitter rear panel.

   Using the INPUT RANGE switch on the distortion measurement set, measure the ultimate wideband SNR. (Note: The reference is +10 dB; hence, a meter input range indicating -60 and a meter reading of -6 would indicate an SNR of -76 dB.)

5. Position the INPUT RANGE switch to +10 dB and reconnect the audio input to the STL transmitter composite BNC connector.

   Remove the 50 Hz high-pass filter from the distortion measurement set and replace it with the 75 Microsecond de-emphasis network.

   Rotate the RELATIVE ADJUST on the distortion measurement set for a reference of 10 dB.

Disconnect the audio input from the STL transmitter composite BNC connector.

Measure the de-emphasized SNR using the same method described above.

Troubleshooting:

1. If the STL link fails to meet the ultimate SNR specification, the sensitivity test (paragraph 6.3.2) should be performed on the receiver prior to troubleshooting the transmitter.

2. If the STL link fails to meet the SNR specification, and the transmitter is suspected, the following method may be used to help isolate the problem:

   a. Using the 80 kHz filter on the distortion measurement set, measure the output of the Composite Audio Processor module for a reading at least 5 dB greater than specified for the ultimate SNR.

   b. Substitute the first LO signal (1020 MHz) using an RF signal generator such as the HP-8640B at an output level of +10 dBm.

   c. Substitute the FMO signal using the RF signal generator at an RF level of +5 dBm.

NOTE: FMO frequency = First LO frequency minus STL Center frequency.

6.3.6 Distortion Alignment

Specification:

THD and IMD Wide (Narrow) Band	Stereo demodulated THD and IMD: 0.2% (0.3%) or less 30 Hz to 7.5 kHz, typically better than 0.1% (0.15%) at 1 kHz
	Convolved stereo demodulation products: greater than 53 dB (50 dB) below the 400 Hz, 100% modulation ref. level from 7.5 kHz to 15 kHz

Description:

A distortion measurement set is used to align the STL receiver 10.7 MHz IF filter for minimum distortion. This method assumes the FMO will contribute a negligible amount of distortion to the overall reading. The FMO distortion can be verified independently of the receiver by referring to section 6.4B (FMO Synthesizer).

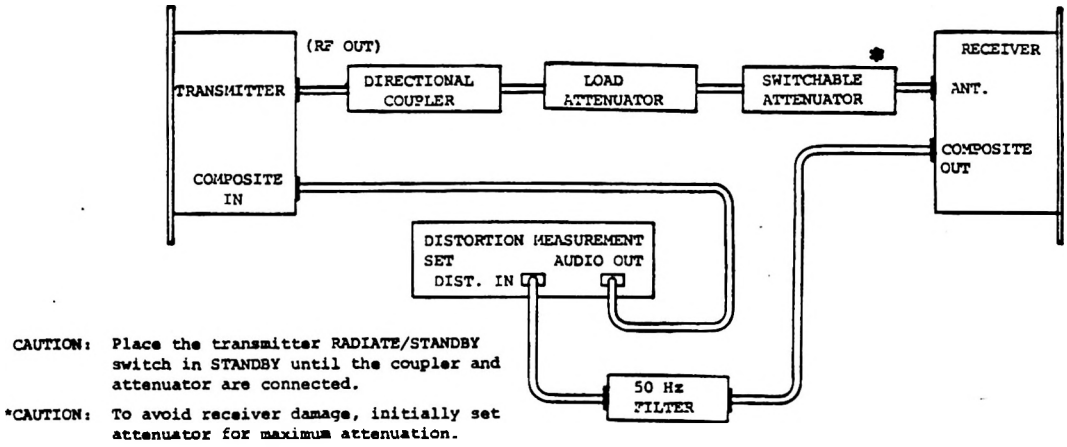

Figure 6-8. STL distortion alignment

Test Equipment:

Directional Coupler	Microlab/FXR CB-49B
Attenuator, 50 Load	Philco, 662A-30
Attenuator, Adjustable	Kay Elemetrics Corp., 432A

Procedure:

1. Connect the equipment as shown in Figure 6-8 and adjust controls on the distortion measurement set as follows:

Meter Function	Input level
Filters	400 Hz - In; 80 kHz - In

Distortion Range	0.3%
Input Range	+10 dB
Frequency	1.0 kHz
Oscillator Level	1.25 V rms (3.5 V p-p)

2. Position the RADIATE/STANDBY switch on the STL transmitter to the RADIATE position. The RADIATE status LED should be green. Using the METER FUNCTION switch on the transmitter, select the FWD POWER position and verify that the meter reads between -3 and +2 dB on the top scale.

   Using the METER FUNCTION switch on the transmitter, select the PGM LEVEL function and verify that the meter reads between -1 and +1 dB on the top scale.

3. Using the METER FUNCTION switch on the STL receiver, select the RF LEVEL function.

   Position the switches on the adjustable attenuator for a reading between 1k and 3k Micro-V on the middle scale of the receiver meter.

   Using the METER FUNCTION switch on the receiver, select the PGM LEVEL function. The meter should read between -1 and +1 dB on the top scale.

   Set the frequency to 15 kHz and verify that the meter of the distortion measurement set reads between 1.2 and 1.3 Vac rms.

   Adjust the METER FUNCTION switch on the distortion measurement set to the DISTORTION position.

4. The following adjustments have dual controls. First determine by the position of the jumpers E2 and E3 in the doubler converter whether the IF is wideband (WB) or narrowband (NB), then adjust the corresponding controls on the Double Converter module and the Second and Third Local Oscillator module for minimum distortion:

   a. 1ST 10.7 MHz IF ADJ (WB) or (NB)

   b. LO 2 FREQ ADJ (WB) or (NB)

5. Rotate the 2ND 10.7 MHz IF ADJ for a minimum reading on the distortion measurement set. Steps 4 and 5 may be repeated two to three times to optimize the distortion reading.

   The distortion reading should now be less than 0.2% wideband or 0.3% narrowband. Switch the frequency on the distortion measurement set to 1.0 kHz. Verify that the distortion reading is less than 0.1%.

Troubleshooting:

1. An RF input to the STL receiver exceeding 6 mV may cause an indication of high distortion.

2. The distortion of the Composite Baseband Processor module in the receiver can be tested independently by applying the output of the distortion measurement set's audio oscillator to the input of the Composite Baseband Processor module.

6.3.7 Stereo Separation and Stereo Signal-to-Noise Ratio

Specification:

Stereo Separation Wide (Narrow) Band	48 dB (43 dB) or better 50 Hz to 15 kHz, typically 50 dB (45 dB) or better
Signal-to-Noise Ratio Wide (Narrow) Band	73 dB (70 dB) or better, typically 76 dB (73 dB) below 100% modulation, de-modulated, de-emphasized left or right

Description:

The stereo separation alignment is accomplished using a stereo generator and demodulator of known quality and an audio spectrum analyzer with tracking generator.

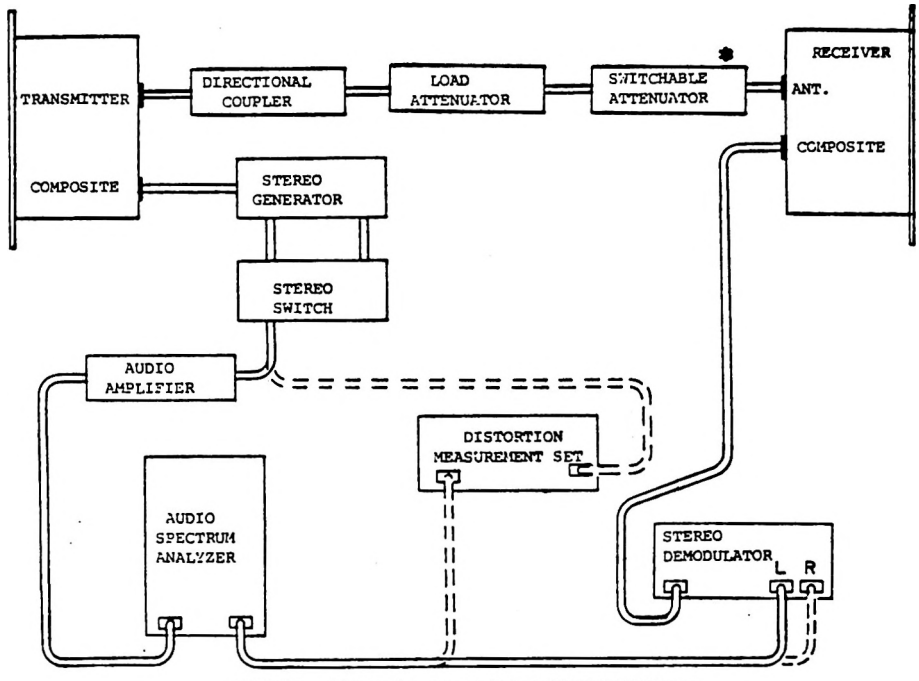

CAUTION: Place the transmitter RADIATE/STANDBY switch in STANDBY until the coupler and attenuator are connected.

*CAUTION: To avoid receiver damage, initially set attenuator for maximum attenuation.

Figure 6-9. Stereo separation test setup

Test Equipment:

Directional Coupler	Microlab/FXR CB-49N
Attenuator, 50 Ohm Load	Philco, 662A-30
Attenuator, Adjustable	Kay Elemetrics Corp., 432D
Distortion Measurement Set	Hewlett-Packard HP-330A

Spectrum Analyzer	Tektronics 7L5 w/ Option 01 & Main Frame
Audio Amplifier	See Figure 6-17
Stereo Generator	RCA BTS-101A
Stereo Demodulator	QEI Model 691
Stereo Source Selector	See Figure 6-18

Procedure:

1. Connect the equipment as shown in Figure 6-9. This test should be run flat; i.e., the stereo generator pre-emphasis and the stereo demodulator de-emphasis should be switched out. If this cannot be accomplished, the system modulation reference level should be reduced to -20 dB at 400 Hz. Adjust the controls on the audio spectrum analyzer as follows:

Frequency	Far left graticule
Dot Frequency	Zero Hz
LOG	10 dB/DIV
Source	FREE RUN
Mode	NORM
Terminate	1 M Ohm
REF	dBV
Resolution	Coupled
SPAN/DRV	2 kHz
Time/DIV	Auto
Tracking GEN	ON

2. Set the RADIATE/STANDBY switch on the STL transmitter to the RADIATE position. Verify that the RADIATE LED is green.

   Using the METER FUNCTION switch on the transmitter, select the FWD POWER position. Verify that the meter reads between -3 and +2 dB on the top scale.

Using the METER FUNCTION switch on the transmitter, select the PGM LEVEL position.

Adjust the dot frequency on the audio spectrum analyzer to 1.0 kHz and the SPAN/DIV to zero.

Adjust the level control on the audio spectrum analyzer for a reading of zero dB on the top scale of the transmitter meter.

Set the dot frequency on the audio spectrum analyzer to zero and the SPAN/DIV to 2 kHz.

Using the METER FUNCTION switch on the receiver, select the RF LEVEL position.

Position the switches on the adjustable attenuator for a reading between 1K and 3K on the receiver meter middle scale.

Using the METER FUNCTION switch on the STL receiver, select the PGM LEVEL position. Verify that the meter reads within +/-1 dB of the STL transmitter meter.

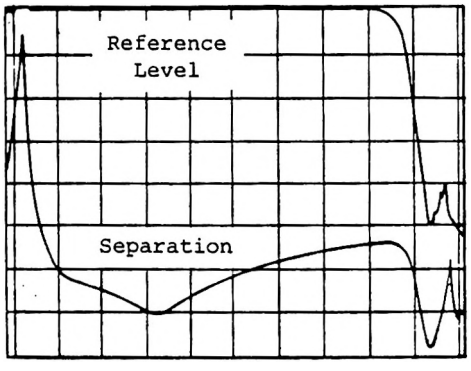

Stereo separation: Measurement of the worst-case ratio in dB of residual signal in the stereo demodulated right channel referred to the demodulated left channel with a left-only driving signal for frequencies between 30 Hz and 15 kHz; the procedure is repeated for right to left channel separation.

Vert = 10 dB/div Hor = 2 kHz/div.

Figure 6-10. Swept separation waveform.

3. Select the LEFT ONLY position on the stereo source selector.

Adjust the step and VAR attenuators on the audio spectrum analyzer so that the waveform is at the top graticule. (See Figure 6-10.)

Select the RIGHT ONLY position on the stereo source selector.

Adjust HF TILT ADJ R10 for wideband or R73 for narrowband on the receiver Composite Base-band Processor module for maximum separation between 1 and 5 kHz.

Adjust EQ ADJ R25 for wideband or R75 for narrowband on the Composite Baseband Processor module for maximum separation between 10 and 15 kHz. (See Figure 6-10.)

Using the SAVE A function on the audio analyzer, store this waveform.

Verify that the separation is greater than 48 dB for wideband or 43 dB for narrowband between 1 kHz and 15 kHz.

4. Connect the spectrum analyzer to the right output of the stereo demodulator.

   Select the RIGHT ONLY position on the stereo source selector. Adjust the step and variable attenuators on the audio spectrum analyzer so that the waveform is at the top graticule. (See Figure 6-10.)

   Select the LEFT ONLY position on the stereo source selector. Verify that the separation is greater than 48 dB for wideband or 43 dB for narrowband between 1 kHz and 15 kHz.

   Note: The HF TILT ADJ and Delay EQ ADJ on the Composite Baseband Processor module affect both the left and right channel separation. Paragraphs 3 and 4 may be repeated to assure optimum performance on both channels.

5. Connect the audio output of the distortion measurement set to the stereo source selector. Connect the left output of the stereo demodulator to the input of the distortion measurement set.

   Set the frequency on the distortion measurement set to 1 kHz. Select the LEFT + RIGHT position on the stereo source selector.

Adjust the output level on the distortion measurement set for a reading of zero dB on the top scale of the STL transmitter. Using the METER FUNCTION switch on the STL receiver, select the PGM LEVEL position and verify that the meter reads within +/-1 dB of the transmitter program level.

Adjust the input controls on the distortion measurement set for a zero dB reference.

Set the frequency on the distortion measurement set to 30 Hz.

Verify that the reference on the distortion measurement set is +/-0.5 dB.

Select the RIGHT ONLY position on the stereo source selector. Using the input attenuator on the distortion measurement set, measure the separation.

Adjust LF TILT ADJ R18 on the Composite Baseband Processor module for maximum separation.

Verify the separation at 50, 100 and 500 Hz.

6. Connect the input of the distortion measurement set to the right channel of the stereo demodulator.

   Position the input range and relative ADJ controls on the distortion measurement set for a zero dB reference.

   Select the RIGHT ONLY position on the stereo source selector and, if required, adjust the zero dB reference on the distortion measurement set.

   Select the LEFT ONLY position on the stereo source selector.

   Using the input range controls on the distortion measurement set, measure the right channel separation.

   Note: The low-frequency tilt adjust on the Composite Baseband Processor module affects both channels. Paragraphs 5 and 6 may be repeated several times to optimize this setting.

7. Stereo signal-to-noise ratio. This test should be run using the normal 75 Micro-s de-emphasis characteristics of the stereo demodulator.

Connect the audio output of the distortion measurement set to the stereo source selector.

Set the stereo source selector to the LEFT + RIGHT position.

Using the 50 Hz high-pass filter, connect the left channel of the stereo demodulator to the distortion measurement set input.

Using the METER FUNCTION switch on the STL transmitter, select the PGM LEVEL position.

Adjust the output of the audio oscillator on the distortion measurement set for a frequency of 400 Hz.

Adjust the output level on the distortion measurement set so that the transmitter meter reads zero dB on the top scale.

Using the METER FUNCTION switch on the receiver, select the PGM LEVEL position, and verify that the meter reads within +/-1 dB of the transmitter meter.

Adjust the input range and relative ADJ controls on the distortion measurement set for a zero dB reference on its meter.

Position the stereo source selector to the OFF position.

Measure the stereo demodulated signal-to-noise ratio for the left channel using the input range control on the distortion measurement set. This value should be greater than 73 dB for wideband operation or 70 dB for narrowband operation.

Using the 50 Hz high-pass filter, connect the input of the distortion measurement set to the right channel and repeat the test.

Troubleshooting:

The performance of the stereo generator and stereo demodulator can be verified by connecting the output of the stereo generator directly to the input of the stereo demodulator.

6.3.8 Stereo Crosstalk

Specification:

Nonlinear Crosstalk, Subchannel to Main Channel Wide (Narrow) Band	53 dB (50 dB) or better
Nonlinear Crosstalk, Main Channel to Subchannel Wide (Narrow) Band	53 dB (50 dB) or better

Description:

The crosstalk measurements are made using a stereo generator of known quality, a low-distortion audio oscillator, and an audio spectrum analyzer.

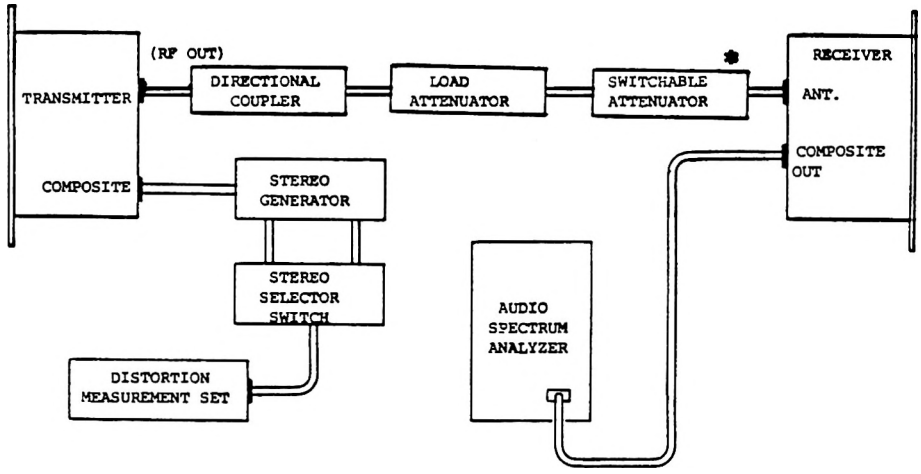

CAUTION: Place the transmitter RADIATE/STANDBY switch in STANDBY until the coupler and attenuator are connected.

*CAUTION: To avoid receiver damage, initially set attenuator for maximum attenuation.

Figure 6-11. Stereo Crosstalk Setup

Test Equipment:

Directional Coupler	Microlab/FXR CB-49N
Attenuator, 50 Ohm Load	Philco 662A-30
Attenuator, Adjustable	Kay Elemetrics Corp., 432D
Distortion Measurement Set	Hewlett-Packard HP-339A
Audio Spectrum Analyzer	Tektronix 7L5
Stereo Source Selector	(See Figure 6-18)
Stereo Generator	RCA BTS-101A

Procedure:

1. Connect the equipment as shown in Figure 6-11. This test should be run with the stereo generator pre-emphasis switched out.

2. Set the RADIATE/STANDBY switch on the STL transmitter to the RADIATE position. The RADIATE status LED should be green.

   Using the METER FUNCTION switch, select the FWD POWER position, and verify that the meter of the STL transmitter reads between -3 and +2 dB on the top scale.

   Using the METER FUNCTION switch on the transmitter, select the PGM LEVEL position.

   Adjust frequency controls on the distortion measurement set for a value of 15 kHz.

   Adjust the oscillator output level on the distortion measurement set so that the transmitter meter reads zero dB on the top scale.

3. Using the METER FUNCTION switch on the STL receiver, select the RF LEVEL position.

   Position the switches of the adjustable attenuator so that the receiver meter reads between 1K and 3K on the middle scale.

   Using the METER FUNCTION switch on the receiver, select the PGM LEVEL position. Verify that the receiver meter reads between -1 and +1 dB on the top scale.

4. Position the controls on the audio spectrum analyzer as follows:

DOT MAR	Dot on far left graticule
DOT FREQUENCY	Zero Hz
LOG	10 dB/DIV
SOURCE	Free run
MODE	NORM
RESOLUTION	Coupled
SPAN/DIV	5 kHz
TIME/DIV	AUTO
TERMIN Z	1 M Ohm
REF	dBV

5. Measure the stereo crosstalk as follows:

   a. Using the attenuator on the audio spectrum analyzer, adjust the 15 kHz waveform to the top graticule. (See Figure 6-12A.)

   b. Calculate the main channel to subchannel crosstalk by measuring the indicated waveforms and using the formula shown in Figure 6-12A. This value should be greater than 53 dB wideband or 50 dB narrowband.

   c. Adjust the frequency of the distortion measurement set to 7.5 kHz.

   d. Position the stereo source selector (Figure 6-18) to the left minus right position.

   e. Calculate the subchannel to main channel crosstalk by measuring the indicated waveforms and using the formula shown in Figure 6-12B. This value should be greater than 53 dB wideband or 50 dB narrowband.

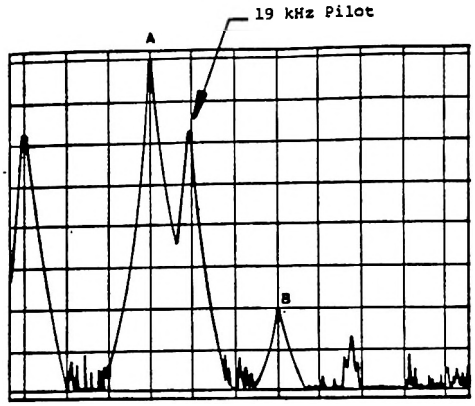

A = 15 kHz L+R Ref. level.
B = 2nd harmonic distortion level at 30 kHz.

Nonlinear crosstalk main to sub = the difference in dB between level A and level B (60 dB in this example).

Vert = 10 dB/div Hor = 5 kHz/div

(A) Nonlinear crosstalk, main to sub.

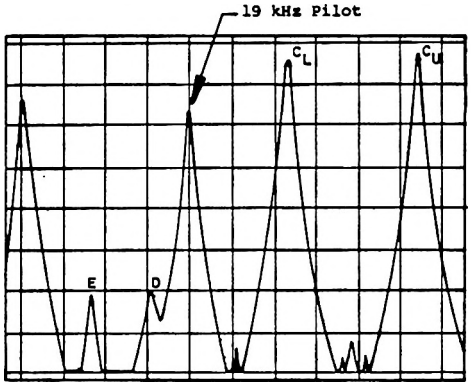

C_L and C_u = lower and upper L-R sideband level at 30.5 kHz and 45.5 kHz.

D = intermodulation product at 15 kHz.

E = linear (vector) crosstalk at 7.5 kHz. This signal is a product of the stereo generator.

Nonlinear crosstalk sub to main = the difference in dB between level C_L or C_u and level D + 6 dB (60 dB in this example).

Vert = 10 dB/div Hor = 5 kHz/div

(B) Nonlinear crosstalk, sub to main.

Nonlinear crosstalk: Measurement of the ratio in dB of harmonic products in the subchannel referred to 15 kHz L+R at 100% modulation in the main channel (M+S); measurement of the ratio in dB of intermodulation products in the main channel referred to 7.5 kHz L-R at 100% modulation in the subchannel (S+M).

Figure 6-12
Nonlinear Crosstalk

Troubleshooting:

1. The stereo generator's performance can be verified by connecting output to the input of the audio spectrum analyzer and performing the tests specified in step 5 above.

2. If the STL link is identified as the source of excessive stereo crosstalk, the following steps should be taken:

   a. Verify that the cover is on the RF amplifier and install the covers on the STL transmitter and receiver using at least two screws.

   b. Ensure that the STL transmitter and receiver are more than 2 feet apart.

   c. Verify that distortion is less than 0.2%, using the procedure shown in paragraph 6.3.6.

6.4 MODULE ADJUSTMENTS

This subsection is intended to

1. Provide additional technical information

2. Assist during alignment troubleshooting

3. Assist during module replacement.

The modules are discussed in the same order used in Section 5. Also included are adjustment instructions to be used during troubleshooting, module repair, or module replacement for the following modules:

FMO Synthesizer

First Local Oscillator

RF Amplifier

Metering and Status (Transmitter)

Double Converter

Metering and Status (Receiver)

6.4.A Composite Audio Processor

PGM LVL ADJ	Program Level Adjustment. Sets the transmitter deviation of the composite signal. Normal input is 3.5 V p-p. The normal deviation of the transmitter is +/-50 kHz wideband or +/-35 kHz narrowband.
MUX 1 LVL ADJ	Multiplex 1 Level Adjustment. Sets the transmitter Multiplex 1 deviation. The normal input is 1.5 V p-p at 110 kHz. Main carrier deviation normally is +/-5 kHz wideband or +/-3.5 kHz narrowband.
MUX 2 LVL ADJ	Multiplex 2 Level Adjustment. Sets the transmitter deviation for the Multiplex 2 input. The normal input is 1.5 V p-p at 185 kHz. Main carrier deviation normally is +/-7.5 kHz wideband or +/-5.25 kHz narrowband.
OUT LVL TP1	Output Level Test Point. Used to monitor the baseband audio input to the FMO. The signal includes both the composite and multiplex levels. 3.5 V p-p = 100% modulation +/-50 kHz wideband or +/-35 kHz narrowband.
A/B SWITCH Internal	Switch used to select the phase of the modulation. When used with a PCL-606 Receiver, the "B" position is used for in-phase modulation, and the "A" position will result in modulation 180 out of phase with the input.

6.4.B FMO Synthesizer

FREQ TRIM	Frequency Trim Adjustment. Used to tune the reference oscillator. The frequency switching described below adjusts the frequency in 10 kHz increments. This adjustment is used as a vernier between those 10 kHz increments.
LOSS OF LOCK	This LED gives a red indication when the AFC loses lock.

AFC LVL TP1	AFC Level Test Point. Monitors the dc level of the AFC loop. It is normally set to +7 V.
A=VARICAP BIAS ADJ	Varicap Bias Adjustment. Used to adjust the FMO for minimum distortion.
TP2=VARICAP BIAS LVL	Varicap Bias Level Test Point. A dc test point used to monitor the bias on the Varicap.
B = DISTORTION ADJ	This circuit is disabled.
DEVIATION SELECT	The Deviation Select jumper is used to set the overall modulation sensitivity of the FMO to either +/-50 kHz deviation for wideband mode or +/-35 kHz deviation for narrowband mode with a 3.5 V p-p input signal.
MODULATION ADJ	Modulation Adjustment. Used to trim the FMO deviation. It is normally set to +/-50 kHz with 3.5 V p-p input with Deviation Select jumper in (WB) position.
AFC LVL ADJ	AFC Level Adjustment. Sets the free run oscillator frequency. Rotating it clockwise causes the frequency to decrease. The final adjustment is made by monitoring TP1 (above) to a value of +7 V.
FMO LVL TP3	FMO Level Test Point. A dc test point used to monitor the output of the FMO oscillator.

Frequency Selector Switches (Internal):

S1:	Tens of Megahertz
S2:	Megahertz
S3:	Hundreds of kilohertz
S4:	Tens of kilohertz

<u>FMO Adjustment</u>:

<u>Test Equipment</u>:

RF Signal Generator	HP-8640B
Mixer	Mini-Circuit 2AD-1

Adjustable Attenuator	Kay Elemetrics Corp., 432B
RF Spectrum Analyzer	HP-8559A
Distortion Measurement Set	HP-339A
50 Hz Filter	Figure 6-15
Counter	Tektronix BC-508A
Multimeter	Data Precision 935
Power Meter	HP-435A w/ 8481A Power Sensor

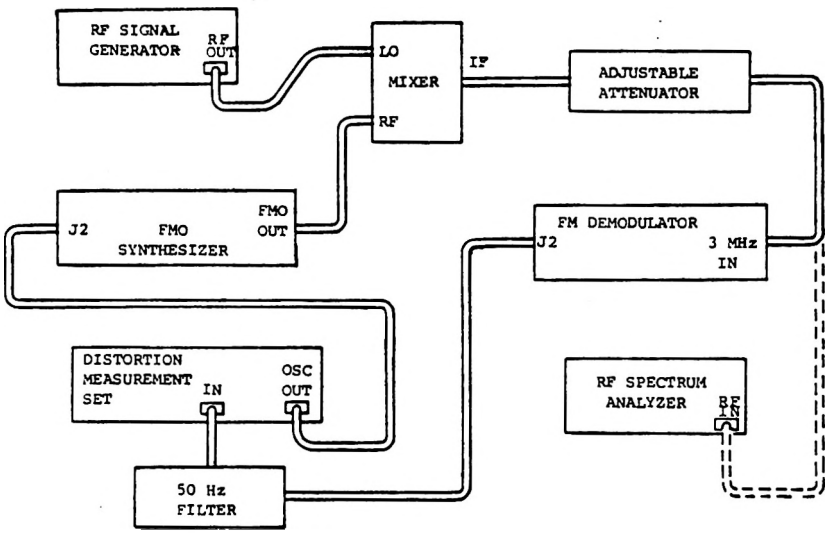

Figure 6-13. Test setup for FMO adjustment.

Procedure:

1. Connect the equipment as shown in Figure 6-13.

   Using the counter, measure the output frequency of the FMO.

FMO frequency equals 1020 MHz minus transmitter frequency.

Note: If the frequency is greater than 10 kHz away from the desired frequency, remove the top cover and position frequency selector switches S1 through S4 for the desired frequency.

Adjust the frequency trim on the FMO so that the counter reads the desired frequency.

Note: If the FMO LOSS OF LOCK is red, it will be necessary to first adjust the AFC level to accomplish this step. See Step 4 below.

Reconnect the FMO output to the RF input of the mixer.

2. Adjust the controls on the RF signal generator for a frequency that is 3 MHz above the FMO frequency and for an output of +10 dBm.

   Using the RF spectrum analyzer, position the switches on the adjustable attenuator for an output level of between -20 and -25 dBM at 3 MHz.

   Reconnect the adjustable attenuator to the FM demodulator.

3. Adjust the oscillator output on the distortion measurement set for a frequency of 1 kHz and a level of 1.25 V rms (3.5 V p-p).

4. Distortion and AFC Level Alignment.

   Using the multimeter, monitor TP1 (AFC Level) and adjust the AFC LVL ADJ so that the voltmeter reads between 6.9 and 7.1 V.

   Using the distortion measurement set, verify that the output of the FM demodulator is between 1.0 and 1.5 V rms.

   Measure the distortion of the output of the FM demodulator, and adjust the Varicap Bias adjustment on the FMO (adjustment A) for a minimum distortion reading.

   Note: Normally there are two setting of the Varicap Bias adjustment that will produce minimum distortion. Varicap bias should be adjusted to the setting that produces the lowest distortion.

Readjust the AFC LVL ADJ so that the voltmeter reads between 6.9 and 7.1 V.

Repeat this procedure until the varicap bias is set for minimum distortion and the AFC level adjustment is between 6.9 and 7.1 V.

Set the frequency on the distortion measurement set for 15 kHz and verify that the distortion is less than 0.05%.

5. Modulation Level.

For this test the deviation select jumper E1 should be in the wideband (WB) position.

Using the counter, set the output frequency of the distortion measurement set oscillator to 20.78 kHz. Verify that the oscillator output voltage is 1.25 V rms.

Adjust FMO deviation for +/-50 kHz as follows, using the Bessel null function waveforms in Figure 6-5:

a. Connect the output of the adjustable attenuator the RF spectrum analyzer and disconnect the audio input from the FMO. Establish the reference level shown in Figure 6-5A on the RF spectrum analyzer.

b. Reconnect the audio from the distortion measurement set to the FMO and adjust the MODULATION ADJ on the FMO from minimum to the first Bessel null function (Figure 6-5B).

6. Reconnect the adjustable attenuator to the FM demodulator.

Verify the AFC level at TP1 is between 6.9 and 7.1 V.

Verify the distortion at 15 kHz is less than 0.05%.

Repeat Steps 3 through 5 of this procedure as required to achieve the above results. If narrowband operation is desired, put the Deviation Select jumper E1 to the (NB) position.

7. Using the Power Meter, verify that the output of the FMO is between 0 dB and +5 dB.

Notes:

A. S1, S2, S3 and S4 are used to set the FMO frequency between 60 and 80 MHz.

B. The FM distortion is normally adjusted using a mixer and FM demodulator of known quality. The quality of the FM demodulator can be verified as follows:

   i. Set the signal generator (mixer LO) frequency 3.000 MHz above the FMO (mixer RF) frequency and measure the distortion.

   ii. Set the signal generator (mixer LO) frequency 3.000 MHz below the FMO (mixer RF frequency and measure the distortion.

   iii. The FM demodulator distortion is equal to the absolute value of measurement (i) minus measurement (ii). The difference should be less than 0.02%.

C. If ordering a replacement FMO from the factory, please specify the operating frequency of the transmitter.

6.4.C Up Converter

This module includes a mixer, 950 MHz filter, and IPA amplifier.

Mixer: The mixer requires no adjustment.

950 MHz Filter: The insertion loss of the filter is between 1 to 2 dB between 940 MHz and 960 MHz. It is designed to provide an additional 40 dB of attenuation of the first LO signal, normally 1020 MHz, and greater than 60 dB of the upper sideband, normally 1080 MHz to 1100 MHz. All adjustments are internal and considered to be factory adjustments.

IPA (Intermediate Power Amplifier): R7 (internal is adjusted for power output. With an input of -10 dBm, the output should be between +15 and +17 dBm between 940 MHz and 960 MHz.

6.4.D First Local Oscillator And Multiplier

FREQ ADJ	Frequency Adjust. Sets the first LO output frequency.

OSC LVL TP1	Oscillator Level Test Point. Provides a DC voltage used to verify that the oscillator is functioning.
1ST DBLR TUNE	First Doubler Tune Adjustment. Used to tune for maximum DC potential at TP2 (1st Doubler Level).
2ND DBLR MATCH	Second Doubler Match Adjustment. Used to tune for maximum DC voltage at TP2 (1st Doubler Level).
1ST DBLR LVL TP2	First Doubler Level Test Point. Provides a DC voltage used to verify that the 1st Doubler is functioning.
2ND DBLR TUNE	Second Doubler Tune. Used to tune for maximum DC voltage at TP3 (2nd Doubler Level).
2ND DBLR LVL TP3	Second Doubler Level Test Point. A DC test point used to verify that the second doubler is functioning.
DIO DRVR TUNE	Diode Drive Tune Adjustment. Used to tune for maximum power output.
DIO BIAS TP4	Diode Bias Test Point. A DC test point used to verify that the step recovery diode is properly biased (0.4 to 0.8 V).
DIO MATCH	Diode Match Adjustment. Used to tune for maximum power output.
Notes:	When installed in the PCL-606 STL transmitter, the frequency output of this module should be 1020 MHz with a power output between +5 and +10 dBm. This measurement should be made on a low-power wattmeter.

6.4.E RF Amplifier

R1 Power output adjustment.

RF Amplifier Alignment

1. Set the HP-8640B signal generator (or equivalent) to center frequency at a power level of -10 dBm.

2. Connect the output of the signal generator to the input of the Intermediate Power Amplifier (IPA).

3. Connect the output of the RF Amplifier to an appropriate power meter.

4. Adjust R1 for 6w power while keeping the final stage current below 1.2 A.

5. Spurious and second harmonic emissions should be monitored by using a 30 dB coupler and spectrum analyzer. The second harmonic should be less than:

$$-10 \text{ P out} + 43 \text{ dB}$$

6.4.F Metering and Status

R1 Used to adjust the FWD POWER meter function. 0 dB equals 100% power (5 to 10 watts).

R2 Adjusts the REFL POWER meter function. Adjust to 0 dB with the antenna disconnected.

R3 Used to adjust the PGM LEVEL meter function. 0 dB equals 50 kHz deviation in wideband mode or 3.5 kHz deviation in narrowband mode.

R4 Used to adjust the MUX LEVEL meter function. 5 on the lower scale equals 5 kHz (3.5 kHz narrowband) deviation of the main carrier by the subcarrier.

R5 Used to adjust the AFC LEVEL meter function. 7 volts equals midscale on the lowest arc.

R6 Used to adjust the IPA LEVEL meter function. Adjust to midscale on the lower arc when the IPA is producing between +15 and +17 dBm of power.

R7 Used to adjust the PA CURRENT meter function. Using a digital voltmeter with a floating input, measure the differential voltage between TP1 and TP2 on the Transmitter Control board when the transmitter is in the RADIATE position. The power amplifier final current is then equal to ten times this value. R7 is then adjusted so that the lower scale of the meter will indicate a value 100 times the value indicated by the digital voltmeter.

R8 Used to adjust the VOLTMETER function of the meter. Using a jumper, connect TP1 of the Metering and Status board to TP2 of the power supply and adjust R8 for a value of 15 on the lower scale.

R9 Adjusts the meter ballistics. The meter is normally adjusted for a 0.25 dB overshoot by switching between the REFL POWER meter function and the PGM LEVEL meter function with a 0 dB input (program input = 3.5 V p-p or 1.25 V rms).

6.4.G Transmitter Control

TP1 A dc test point used to measure the relative forward power.

TP2 TP2 and TP3 are used to monitor the power amplifier final output current. The measurement is made using a floating input dc voltmeter. Ten times the voltage measured equals the current of the final stage in the RFA amplifier.

TP3 See TP2 above.

6.4.H Power Supply

R5 Used to adjust the +12.5 V power supply output voltage when the transmitter is in the RADIATE position.

6.4.I Preselector Filter

The five tuning elements on the STL receiver preselector are aligned at the factory using a return loss technique. Attempting to tune the preselector for insertion loss only generally results in degraded performance of the STL receiver.

Measuring the STL receiver noise performance (paragraph 6.3.2) is an indirect method of verifying the preselector performance.

An insertion loss greater than 2 dB is an indication that the preselector is failing to meet its performance criteria. When making this measurement, care should be taken to ensure that the cables do not adversely affect measurements. Figure 6-14 shows the proper method of measuring the preselector insertion loss.

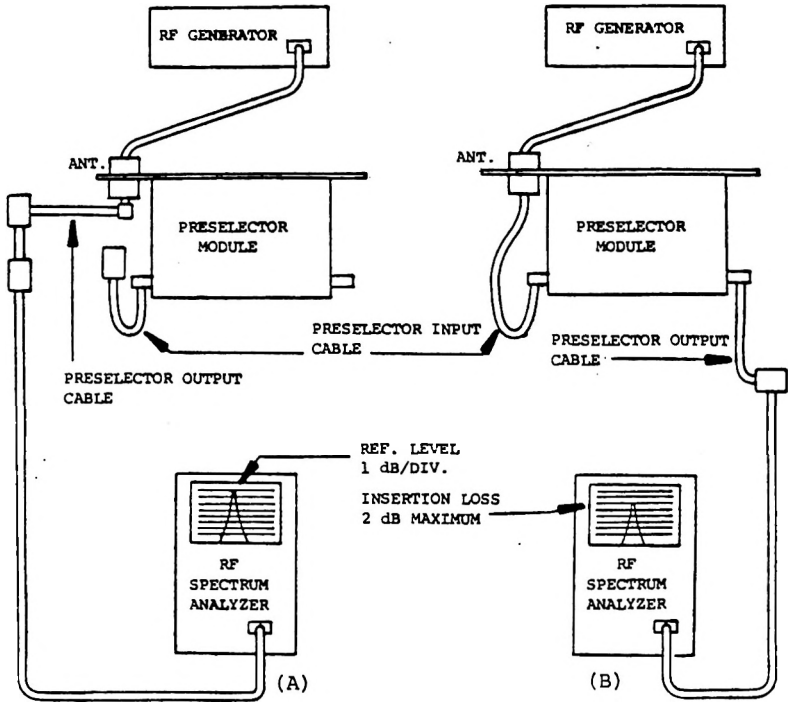

Figure 6-14. Test setup for measuring the preselector insertion loss.

6.4.J Preamplifier and First Mixer

70 MHz OUT ADJ — 70 MHz Output Adjustment. Alignment is performed using an RF signal generator and the receiver front-panel meter in the RF LEVEL position.

Set the RF Signal Generator as follows:

Frequency	As specified on the serial number label.
FM Deviation	OFF
RF Level	Set to 300 to 1K on the middle scale of the STL receiver meter.

Adjust the 70 MHz OUT ADJ (L3) for maximum receiver meter indication. NOTE: Greater accuracy can be achieved by monitoring the rear panel MTR OUT (meter output) terminal with a dc voltmeter.

RF GAIN LVL TP1 — RF Gain Level Test Point. Used to monitor the negative dc voltage on the pin diode attenuator.

RF GAIN ADJ — RF Gain Adjustment. During servicing and alignment, this adjustment is set for a reading between -14 V and -16 V on TP1 (RF Gain Level).

When installed at the Broadcast Transmitter site, this adjustment may range between 0 and 15, as indicated on the STL receiver meter lower range when the RF GAIN function is selected.

6.4.K First Local Oscillator

Determine the STL receiver first LO output as follows:

Receiver frequency + 70 MHz = first LO frequency

The adjustments for the receiver First Local Oscillator and Multiplier module are identical to those specified in Paragraph 6.4.D for the transmitter First Local Oscillator and Multiplier module.

6.4.L Double Converter

Note: The 10.7 MHz IF is factory-adjusted for minimum distortion at the desired selectivity.

1ST 10.7 MHz IF ADJ (WB)	IF Adjustment. Adjust for minimum distortion when the Receiver is operating in the wideband mode.
1ST 10.7 MHz IF ADJ (NB)	IF Adjustment. Adjust for minimum distortion when the Receiver is operating in the narrowband mode.
2ND 10.7 MHz IF ADJ	IF Adjustment. Adjust for minimum distortion. Note: The LO2 FREQ ADJ on the second and third Local Oscillator module and the first 10.7 MHz IF ADJ and second 10.7 MHz IF ADJ on the Double Converter module interact. See paragraph 6.3.6, Distortion Alignment, for additional information.
70 MHz BPF ADJ (1 to 4)	Bandpass Filter Adjustments. The alignment of the 70 MHz bandpass filter can be checked indirectly by verifying the receiver noise performance to within 20 Micro-V of the value specified on the final test data sheet included in this manual. (See paragraph 6.3.2, STL Receiver Sensitivity).

<u>70 MHz Bandpass Filter Alignment</u>

1. Connect RF signal generator (HP-8640B or equivalent) to the 70 MHz input of the Double Converter module.

   Set the following:

   Frequency to 70.000 MHz

   RF level to -37 dB

2. Using a digital voltmeter, monitor TP3 (Log Level) on the FM Demodulator module.

3. Adjust the 70 MHz BPF ADJ (1-4) capacitors for a maximum reading on the digital voltmeter. Repeat this step two or three times to ensure a maximum reading.

4. After alignment of the 70 MHz bandpass filter, both the STL receiver sensitivity (paragraph 6.3.2) and the STL link distortion (paragraph 6.3.6) alignment procedures should be performed.

6.4.M Second and Third Local Oscillator

LO2 FREQ ADJ (WB)	LO2 Frequency Adjust for wideband mode. Adjusts the LO2 frequency between 80.670 kHz and 80.730 kHz. Exact frequency for the purpose of alignment is determined by the wideband 10.7 MHz IF.
LO2 FREQ ADJ (NB)	LO2 Frequency Adjust for narrowband mode. Functions identically to adjustment above for the narrowband IF.
BFR LVL TP1	Buffer Level Test Point. A dc test point used to indicate that the oscillator and buffer are functioning.
1ST DBLR ADJ	First Doubler Adjustment. Adjust for maximum dc level at TP2 (1st DBLR Level).
1ST DBLR LVL TPT2	First Doubler Level Test Point. A dc test point used to verify that the first doubler is functioning.
LO2 OUT ADJ	LO2 Output Adjustment. Adjust for maximum LO2 RF output. Note: If a power meter is not available, the LO2 Output may be tuned for a maximum dc level at TP3 (LO2 Output Level).
LO2 OUT LVL TP3	LO2 Output Level Test Point. A dc test point used to indicate that the second doubler is functioning.
LO3 OUT LVL TP4	LO3 Output Level Test Point. A dc test point used to verify that the third LO (13.7 MHz oscillator) is functioning. Note: The LO2 frequency affects the STL receiver distortion and stereo crosstalk performance. When installing a replacement module in an STL receiver, the fre-

quency should be set to the value specified on the Double Converter module.

6.4.N FM Demodulator

LOG GAIN ADJ	Log Gain Adjustment. Calibrates the RF LEVEL meter function. To accomplish this, the RF GAIN ADJ on the Preamplifier and First Mixer module should be at 0 attenuation (-14 V to -16 V). With 10 mV of signal applied to the RF input, R3 on the Metering and Status board should be adjusted for a reading of 3K on the middle scale. The input should then be reduced to 100 Micro-V, and the LOG GAIN ADJ on the FM Demodulator should be adjusted for 100 on the middle scale. The 3, 10, 30, 100, 300, 1K, and 3K levels should be checked to ensure that the meter reads between the upper and lower line on the meter for each range. As a general rule, R3 on the Metering and Status board is used to adjust the full scale or 3K reading, and the LOG GAIN ADJ on the FM Demodulator module is used to adjust the linearity in the 100 to 300 Micro-V range.
LOG LVL TP3	Log Level Test Point. A dc test point used to monitor the first stage of the meter log amplifier.
DEMOD LVL TP2	Demodulator Level Test Point. A dc test point with a voltage proportional to the frequency of the 3 MHz IF. Normally this voltage is between +4 and +6 Vdc.
MUTE THR ADJ	Mute Threshold Adjust (LED). Indicates status of mute logic (red = mute).
MUTE THR ADJ	Mute Threshold Adjust. Adjusts the mute logic threshold; threshold = 20 Micro-V input signal with RF gain at 15 on receiver meter (TP1 on Preamplifier and First Mixer module at -14 V to -16 V).

BB LVL ADJ	Baseband Level Adjust. Adjust the output of the baseband including the composite and multiplex levels. +/-50 kHz deviation wideband or +/-35 kHz deviation narrowband = 3.5 V p-p.
BB LVL TP1	Baseband Level Test Point. An ac test point used to monitor the output level of the baseband processor. +/-50 kHz deviation wideband or +/-35 kHz deviation narrowband = 3.5 V p-p.

6.4.0 Composite Baseband Processor

HF TILT ADJ (WB)	HF Tilt Adjustment for wideband mode. Adjusts the stereo separation between 1 and 5 kHz.
HF TILT ADJ (NB)	HF Tilt Adjustment for narrowband mode. Adjusts the stereo separation between 1 and 5 kHz.
LF TILT ADJ	LF Tilt Adjustment. Adjusts the stereo separation between 30 and 100 Hz.
DLY EQ ADJ (WB)	Delay Equalizer Adjustment for wideband mode. Adjusts the stereo separation between 10 and 15 kHz.
DLY EQ ADJ (NB)	Delay Equalizer Adjustment for narrowband mode. Adjusts the stereo separation between 10 and 15 kHz.
MUX LVL ADJ	Multiplex Level Adjustment. Adjusts the multiplex level output of the Composite Baseband Processor module. Normally adjusted so that +/-5 kHz (wideband) or +/-3.5 kHz (narrowband) deviation equals 1.5 V p-p at 110 kHz.
COMP LVL TP1	Composite Level Test Point. An ac coupled test point used to measure the composite level. Normally, 3.5 V p-p equals +/-50 kHz (wideband) and +/-35 kHz (narrowband) deviation.
MUX LVL TP2	Multiplex Level Test Point. An ac coupled test point used to measure the multiplex level. 5 kHz (wideband) or 3.5 kHz (narrowband) deviation at 110 kHz equals 1.5 V p-p.

Notes: The HF TILT, LF TILT, and DELAY EQ adjustments are used primarily to optimize stereo separation performance. In other applications, such as communications, HF TILT and LF TILT would be used to adjust audio frequency response within +/-.1 dB from 30 Hz to 53 kHz. The DELAY EQ adjustment would have no effect on the frequency response performance.

6.4.P Metering and Status

R1 Adjusts the PGM LEVEL meter function on the receiver Metering and Status board. Zero dB on the top scale of the meter equals +/-50 kHz (wideband) or +/-35 kHz (narrowband) deviation of the composite signal.

R2 Adjusts the MUX LEVEL function of the meter. A reading of 5 on the lower scale equals 5 kHz (wideband) or 3.5 kHz (narrowband) deviation of the main carrier by the 110 kHz subcarrier. The meter indication for the 185 kHz deviation is given on the test data sheet (Section 8).

R3 Used to adjust the RF LEVEL function. A reading of 3K on the center scale of the meter equals 3000 Micro-V of input signal. Other controls that affect this setting are: the RF GAIN Adjust on the Preamplifier and First Mixer module, and the LOG GAIN Adjust on the FM Demodulator module. (See Paragraph 6.4.N LOG GAIN ADJ for the alignment of this meter function.)

R4 Adjust to center of the lowest scale for the LO1 LEVEL meter function.

R5 Adjust to center of the lowest scale for the LO2 LEVEL meter function.

R6 Adjust to center of the lowest scale for the LO3 LEVEL meter function.

R7 Adjusts the RF GAIN meter function. Adjust to 15 on the lower scale when TP1 on the Preamplifier and First Mixer module is between -14 V and -16 V.

R8 Adjusts the VOLTMETER function of the meter. Adjust by connecting a test probe between TP1 on the Metering and Status board and TP5 on the Power Supply module.

R9 Adjusts the meter ballistics. The meter is normally adjusted for a 0.25 dB overshoot by switching between the VOLTMETER meter function (with no input) and the PGM LEVEL meter function with a 0 dB input (program input = 3.5 V p-p or 1.25 V rms).

6.4.Q Mute and Transfer

The Mute and Transfer module requires no adjustment.

If a failure is suspected in the Mute and Transfer module, the following information may be useful in isolating the problem:

1. A mute signal from the FM Demodulator (Mute Threshold Adjust LED red) will de-energize the mute relay and disconnect the composite and multiplex audio outputs.

2. This module may be externally muted, either by a remote mute input or a transfer input from a dual STL receiver.

3. The transfer mode is activated by the STL receiver OPERATE/TRANSFER switch. Disconnecting J3 will open this circuit and eliminate the possibility of either a short circuit or bad switch.

6.4.R Power Supply

Input Voltage: 100, 110, 220, or 240 VAC.

Output Voltages: The output voltages are predetermined by an internal reference in the IC regulator chips. Overvoltage generally indicates a failure of the appropriate chip. Zero output voltage generally indicates a short circuit in one of the STL receiver modules. This can be verified by removing J1 through J4 and checking the output voltage.

Poor regulation generally results from either a high load (greater than 0.75 A) or poor mechanical connection with the heat sink.

6.5 GENERAL TROUBLESHOOTING INFORMATION

Description:

The information below will assist in troubleshooting an STL transmitter or receiver to the module level.

Test Equipment:

Attenuator 50-Ohm Load	Philco	662A-30
Counter	Tektronix	DC-508A
Directional Coupler	Microlab/FXR	Model CB-49B
Distortion Measurement Set	Hewlett-Packard	Model 339A
Power Meter and Sensor	Hewlett-Packard	435A w/8481A Power Sensor
RF Signal Generator	Hewlett-Packard	Model 8640B
RF Spectrum Analyzer	Hewlett-Packard	Model 8559A
Stereo Demodulator	QEI	Model 691
Multimeter	Data Precision	Model 935
75 s DeEmphasis Network	Figure 6-16	

6.5.1 Transmitter Troubleshooting Procedure

1. Connect the equipment as shown in Figure 6-1 and position the RADIATE/STANDBY switch to the RADIATE position.

2. Verify that the +15 V, -15 V and +5 V status lights are green. If they are not, power supply voltages should be checked before proceeding.

3. Verify that the RADIATE, AFC LOCK, and +12 V status indicators are green. The AFC LOCK indicator is controlled by the FMO. The RADIATE status indicator is controlled by the Transmitter Control board, and the +12 V indicator is controlled by the Power Supply. Also, the wiring harness and the Metering and Status board may lead to faulty indications.

4. Using the final test data sheet (Section 8) as a reference, use the METER FUNCTION switch to select the following positions:

   AFC LEVEL - The meter should indicate within the lower black arc. If it does not, the FMO AFC Level should be aligned before proceeding.

   IPA LEVEL - The IPA Level should read within the lower black arc. If it does not, the following steps should be taken:

   Verify that the +12 V is between 12.25 and +12.75 V.

   Using the power meter, verify that the input to the IPA amplifier on the Up Converter is at least -10 dBm. If it is, the problem is located in the Up Converter amplifier.

   Verify that the output of the Up Converter mixer is at least -6 dBm. If it is, the problem is located in the 950 MHz Up Converter bandpass filter.

   Measure the output of the First Local Oscillator and Multiplier module for a value between +5 and +10 dBm. Using the power meter, measure the output of the FMO for a value between 0 and +5 dBm.

6.5.2 Receiver Troubleshooting Procedure

1. Connect the equipment as shown in Figure 6-2 and adjust the RF signal generator as indicated in procedure 6.3.2 Step 1.

2. Verify that the power supply status LEDs on the front panel are green. If they are not, use the multimeter to verify power supply output voltages prior to proceeding.

3. Using the METER FUNCTION switch, verify that the LO1 LEVEL, LO2 LEVEL, and LO3 LEVEL meter readings are within the lower arc on the meter.

4. Using the METER FUNCTION switch, select the RF GAIN position and verify that the meter reads 15. If it does not, adjust the RF GAIN ADJ on the Preamplifier and First Mixer module so that TP1 on the Preamplifier and First Mixer module reads between -14 and -16 V.

5. The following procedure is used to measure the gain distribution of the receiver for proper performance:

   a. Using the procedure outlined in Paragraph 6.4.I, measure the preselector insertion loss for a minimum of 2 dB.

   b. Reconnect the preselector output to the preamplifier input.

   c. Using the RF signal generator and spectrum analyzer, measure the Preamplifier and First Mixer conversion gain for a value between +10 and +14 dBm. Note: Use the output of the RF signal generator to establish a reference on the spectrum analyzer; then measure the 70 MHz output of the Preamplifier and First Mixer module. Add preselector insertion loss to the gain indicated by the spectrum analyzer to determine the Preamplifier and First Mixer conversion gain.

   d. Using the output of the Preamplifier and First Mixer module as a reference, measure the conversion gain of the Double Converter module. The 3 MHz output should be between +3 and +7 dB greater than the 70 MHz input.

   e. Connect the output of the RF signal generator to the input of the FM Demodulator. The output of the RF signal generator should be set for a frequency of 3 MHz at a level of -25 dBm with an FM deviation of 5 kHz. The output of the FM Demodulator should be 0.35 V p-p. If it is not, troubleshooting of the FM Demodulator is indicated. If it is, troubleshooting of the Composite Baseband Processor or the Mute and Transfer modules is indicated.

6.6 TEST FIXTURE DIAGRAMS

The test fixtures shown in Figures 6-15 through 6-18 have been designed to interface with the equipment specified in Table 6-1.

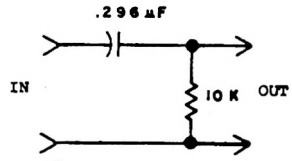

Figure 6-15
50 Hz High-Pass Filter

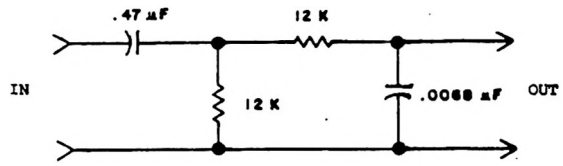

Figure 6-16
75 Micro's De-Emphasis with 30 Hz High-Pass Filter

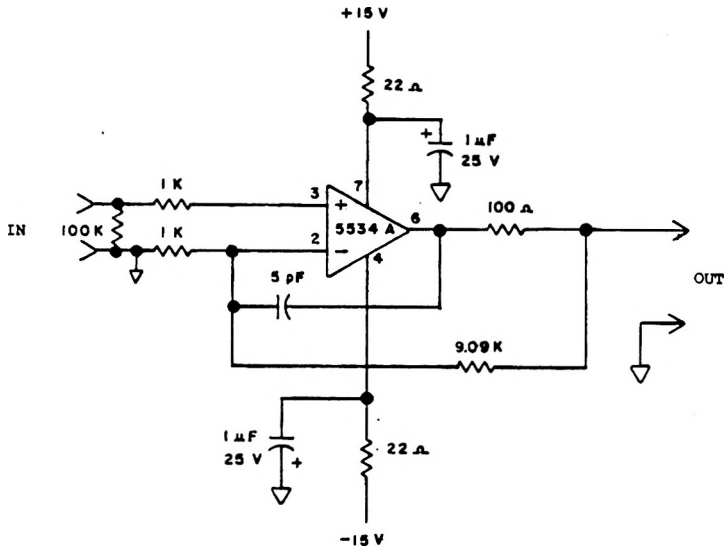

Figure 6-17 Audio Amplifier

Figures 6-15, 6-16, 6-17

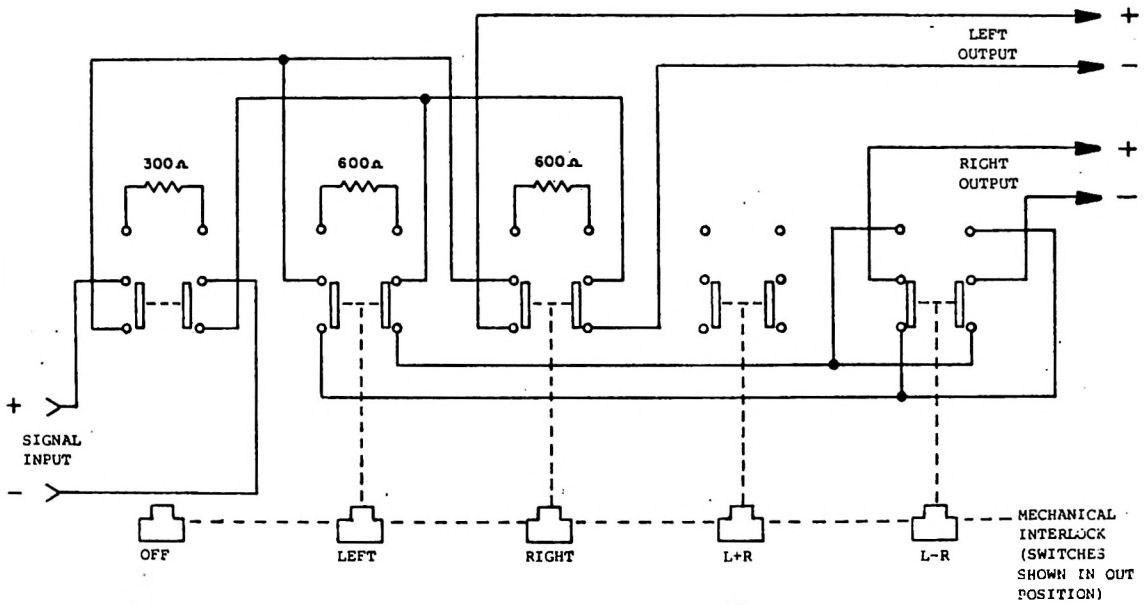

Figure 6-18
Stereo Source Selector

SECTION 7

RECOMMENDED SPARES

7.1 INTRODUCTION

This section contains replacement parts information. The next two subsections contain information on complete replacement modules, which is the most expedient method of correcting a problem. The last subsection decribes the spare parts kit and optional spare parts kits for those who wish to troubleshoot to the component level. Price information on the recommended spares is available upon request.

7.2 SPARE TRANSMITTER MODULES

Module	Drawing Number	Module Item No.	Stock Location
Composite Audio Processor	20D2831	9301318	2211
FMO Synthesizer	20D2951	9302175	2212
Up Converter	20C2934	9104753	2212
First Local Oscillator	20D2828	9301276	2211
RF Amplifier	20D2937	9302035	2211
Metering and Status	20D2818-2	9204199	2211
Transmitter Control	20C2834	9204215	2211
Power Supply	20C2817	9203597	2211

7.3 SPARE RECEIVER MODULES

Module	Drawing Number	Module Item No.	Stock Location
Preselector Filter	21C2754	9102138	2211
Preamp and First Mixer	20D2827	9301268	2211
First Local Oscillator	20D2828	9301276	2211
Double Converter*	20D2945-1	9302498	2211

Second and Third Local Oscillator	20D2948	9302118	2212
FM Demodulator	20D2949	9302100	2211
Composite Baseband Processor*	20D2946	9302084	2211
Metering and Status	20D2818-1	9204165	2211
Mute and Transfer	21D2742	9102120	2211
Power Supply	21D2850	9104803	2075

*These modules are matched sets and should be replaced together.

7.4 SPARE PARTS KITS

The following pages describe the spare parts kit and optional spare parts kits. These kits contain component level replacements.

APPENDIX

STL PATH EVALUATION

INTRODUCTION

This appendix provides instructions for preparing the STL path profile and the path evaluation calculations. The STL path profile is needed to determine a clear unobstructed line-of-sight path with the main incident beam clearing all objects by a distance that is at least 0.6 of the radius of the first Fresnel zone.

The path should be plotted on a seven and a half minute topographical map, which is available from the United States Geological Survey. The maps can be ordered as follows:

East of the Mississippi:	West of the Mississippi:
Geological Survey Distribution Section Washington, DC 20242	Geological Survey Distribution Section Federal Center Denver, CO 80225

STL PATH PROFILE

Using ground elevations obtained from the topographical map, prepare an STL path profile using the true-earth-radius graph paper attached to this appendix. Be sure to include all obstacles in the path, including buildings, towers, grain elevators, recently erected structures, etc. that may not appear on the map.

The axis of the main incident beam should, ideally, clear all obstacles in the path by a distance that is at least 0.6 of the radius of the first Fresnel zone. This factor is used to define the transition between the obstruction and interface zones regardless of the reflection coefficient.

The following formula may be used to determine the first Fresnel zone clearance:

$$F_r = 2280 \sqrt{\frac{AB}{f_o P}}$$

where

F_r = Fresnel radius (in feet) perpendicular to the main beam path

A = distance (miles) from receiver to obstruction

P = total path length (miles)

B = P - A (miles)

f_o = carrier frequency in MHz.

Draw a straight line on the STL path profile graph which clears any obstacle in the path by the distance calculated using the above formula multiplied by 0.6 which yields the critical dimension. This line then determines the STL antenna and/or tower heights necessary at each end of the path.

PATH EVALUATION FOR AURAL STL SYSTEMS

Using the System and Path Information Sheet and the Path Evaluation Form, prepare path evaluation calculations for each path under consideration. Follow these instructions for completing the Path Evaluation Form:

Line 1. Transmitter Power Output: Enter the transmitter output power in dBm. Examples: 5 W = +37 dBm, 7 W = +38.5 dBm, 8 W = +39 dBm, 10 W = +40 dBm, and 50 W = +47 dBm.

Line 2. Transmitter Antenna Gain: Enter the gain of the STL transmitting antenna over an isotropic antenna.

Line 3. Receiver Antenna Gain: Enter the gain of the STL receiving antenna over an isotropic antenna.

Line 4. Total Gain: Add the total of lines 1, 2, and 3 and enter here.

Line 5. Path Loss: Use a straight-edge ruler on the free-space attenuation nomograph provided on the System and Path Information Sheet. With the right side aligned on fo and the left side at the path distance, read the unobstructed free-space attenuation in dB from the center scale. Enter this value on Line 5.

Line 6. Transmission Line Loss: Determine the total length of transmission line required in the STL system (at both ends, the transmitter and receiver); then enter the line length and line loss in dB.

Line 7. Connector Loss: Enter total connector losses. (Example a nominal figure is 0.5 dB based on 0.125 dB per mated connector pair at 950 MHz).

Line 8. Other Losses: Enter other miscellaneous system losses here. These may include power dividers, duplexers, diplexers, circulators, isocoupler, and the like.

Line 9. Total Loss: Enter the total of lines 5, 6, 7, and 8. This is the total STL system loss.

Line 10. Total Gain: Enter the total gain from line 4.

Line 11. Total Loss: Enter the total loss from line 9.

Line 12. Effective Received Signal: Enter the difference between line 10 and line 11. This is the signal level in dBm (without fading) that we expect at the RF input connector of the STL receiver.

Line 13. Minimum Signal for 60 dB SNR: Enter the model number of the STL receiver. Using the listing on the System and Path Information Sheet, enter the receiver signal input (in dBm) required to achieve a 60 dB SNR output.

Line 14. Fade Margin: Subtract line 13 from line 12 and enter here. At 950 MHz, typical minimum fade allowances are:

Monaural	-	15 dB
Composite	-	20 dB

CONVERSION CHART FOR MICROVOLTS TO dBm

(at 50 ohms impedance)

Microvolts	dBm
0.10	-127
0.25	-119
0.50	-112.9
0.70	-110
1.0	-106.9
1.4	-104
2.0	-100.9
2.5	-99
3.0	-97.5
3.5	-96
4.0	-95
4.5	-93.9
5.0	-92.9
6.0	-91.25
7.0	-90
8.0	-88.9
9.0	-87.9
10	-86.9
11	-86
12	-85.25
14	-84
16	-82.9
18	-81.9
20	-80.9
25	-79
30	-77.25
35	-76
40	-74.9
45	-73.9
50	-72.9
60	-71.25
70	-70
80	-68.9
90	-67.9
100	-66.9
120	-65.25
140	-64
160	-62.9

Microvolts	dBm	
180	-61.9	
200	-60.9	
250	-59	
300	-57.50	
350	-56	
400	-54.9	
450	-53.9	
500	-52.9	
600	-51.25	
700	-50	
800	-49	
900	-48	
1,000	-46.9	
1,200	-45.25	
1,400	-44	
1,600	-42.9	
1,800	-41.9	
2,000	-40.9	
2,500	-39	
3,000	-37.25	
3,500	-36	
4,000	-34.9	
4,500	-33.9	
5,000	-33	
6,000	-31.25	
7,000	-30	
8,000	-28.9	
9,000	-27.9	
10,000	-26.9	
22.36 mV	-20	(10 µW)
70.7 mV	-10	(100 µW)
223.6 mV	0	(1 mW)
707.1 mV	+10	(10 mW)
2.23 V	+20	(100 mW)
7.07 V	+30	(1 W)
15.81 V	+37	(5 W)
22.36 V	+40	(10 W)

MOSELEY ASSOCIATES, INC.
a flow general company • santa barbara research park

PATH EVALUATION FORM

Reference Number _____ Prepared By _____ Date _____

CUSTOMER _____

_____

_____

SYSTEM GAINS

1.	Transmitter Power Output (Model #_____)	+_____ dBm
2.	Transmitter Antenna Gain (Antenna Type_____)	+_____ dBi
3.	Receiver Antenna Gain (Antenna Type_____)	+_____ dBi
4.	Total Gain	+_____ dB

SYSTEM LOSSES

5.	Path Loss (_____miles/_____km)	-_____ dB
6.	Transmission Line Loss (Total ft _____/_____m) (Type_____)	-_____ dB
7.	Connector Loss (Total)	-_____ dB
8.	Other Losses_____	-_____ dB
9.	Total Loss	-_____ dB

SYSTEM CALCULATIONS

10.	Total Gain (Line 4)	+_____ dB
11.	Total Loss (Line 9)	-_____ dB
12.	Effective Received Signal _____μV =	_____ dBm
13.	Minimum Signal Required for _____dB SNR (Model_____)	-_____ dBm
14.	Fade Margin	_____ dB

NOTES:

111 CASTILIAN DRIVE • GOLETA, CALIFORNIA 93117 • (805) 968-9621 • TELEX: 658-448 • CABLE: MOSELE

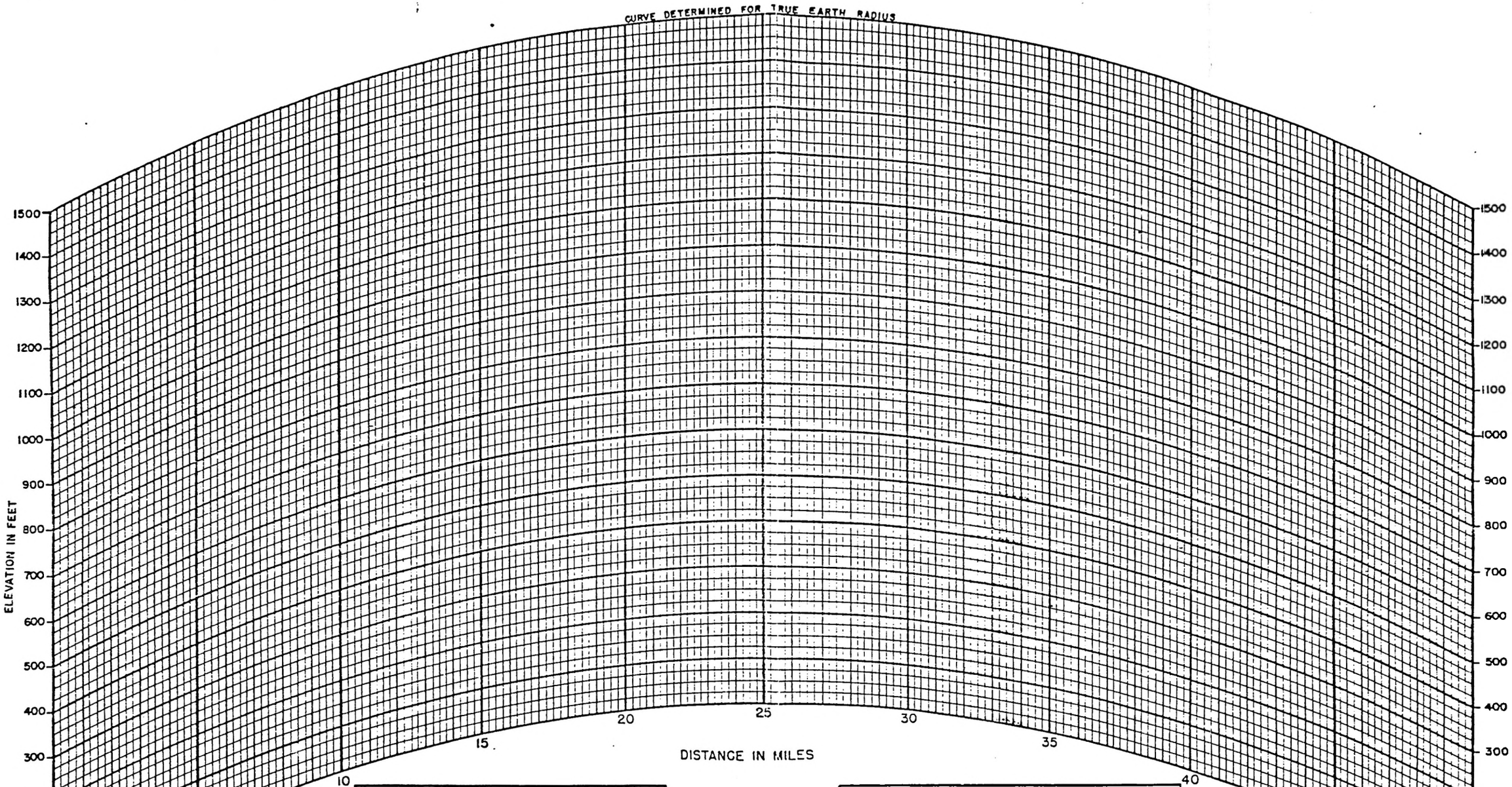

POINT TO POINT PLAN

ENGINEERING DEPARTMENT | MOSELEY ASSOCIATES, INC.
SANTA BARBARA, CALIFORNIA

STATION CALL | FREQ. MC
LOCATION
RADIAL NO. | BEARING DEGREES
FROM TO
TRANSMITTING ANTENNA HEIGHT ABOVE GROUND FT
RECEIVING ANTENNA HEIGHT ABOVE GROUND FT
DATE: _____ FIG. NO. ____

15B-1003