MOSELEY ASSOCIATES, INC.

INSTRUCTION MANUAL

MODEL PCL-505
(890-960 MHz)

MONAURAL

AURAL

STUDIO-TO-TRANSMITTER LINK

MOSELEY ASSOCIATES, INC.
Santa Barbara Research Park
111 Castilian Drive
Goleta, California 93017

Revised
March 1978

(805) 968-9621

MOSELEY ASSOCIATES, INC.

FINAL TEST DATA

MODEL PCL-505

Date 17 Aug. 1983
Order # 3392
Technician Conrad

Customer KHYX
Tx Serial # 39225
Rx Serial # 40699
Frequency 950.125 MHz

Transmitter Meter Readings

Program	0	dB top
MPX Chan. 1 @ 26 kHz	10	bottom
Chan. 2 @ 67 kHz	15	bottom
AFC	15	bottom
FRD PWR 6.0 Watts	0	top -0.5
RFL PWR	0	bottom 0
+VDC	12.5	bottom 12.5
Reference Oscillator	14.5	bottom 14.5
H.F. Divider	13.0	bottom 13.0
I.P.A. Drive	20.5	bottom 19.0
Final Current 2 amp max	11.5	bottom 11.2

Power Supply to be set using a DVM

Transmitter	12.5	VDC
Receiver	12.5	VDC

Receiver Meter Readings

+VDC	12.5	bottom
Signal (no input)	1.8	bottom
Program @ 100% mod.	0	dB
MPX 26 kHz	10	bottom
67 kHz	15.9	bottom
Level for 45 dB SNR:	-90	dBm

RF P_o Levels

FMO	25	15 MW min
MULT-DRIV	180	120 MW min
FINAL AMP	6.0	5 W min

PCL-505 System Performance

Freq. (Hz)	Response	Distortion (%)
30	- .4 dB	.21
50	- .4 dB	.13
400	0 dB	.07
1,000	0 ref	.05
5,000	0 dB	.07
10,000	+ .3 dB	.06
15,000	0 dB	.08

Receiver Signal Meter Calibration

Microvolts	
5	1.8
10	1.9
20	2.5
50	7.0
100	9.1
200	11.0
500	13.0
1,000	14.0
1,500	14.0

System Noise

Ultimate SNR: 74 dB
SNR: 82 dB with noise reduction circuit active
Level for 60 dB SNR: -82 dBm
Squelch set between 15-20 20 µV

These readings were noted during final electrical test of the equipment and are intended for reference purposes. Readings may vary with component replacement or aging, adjustment, RF terminations, equipment installation, or path conditions.

Rev. 12 May 1983
ph

MOSELEY ASSOCIATES, INC.

FINAL TEST DATA

MODEL PCL-505

Date 17 Aug. 1983
Order # 3392
Technician Conrad

Customer KHYX
Tx Serial # 39226
Rx Serial # 40700
Frequency 949.875 MHz

Transmitter Meter Readings

Program	0	dB top
MPX Chan. 1 @ 26 kHz	10	bottom
Chan. 2 @ 67 kHz	15	bottom
AFC	15	bottom
FRD PWR 60 Watts	0	top 0
RFL PWR	0.5	bottom 0
+VDC	12.5	bottom 12.5
Reference Oscillator	15.0	bottom 15.0
H.F. Divider	13.0	bottom 13.0
I.P.A. Drive	19.0	bottom 16.9
Final Current 2 amp max	8.5	bottom 7.8

Power Supply to be set using a DVM

Transmitter	12.5	VDC
Receiver	12.5	VDC

Receiver Meter Readings

+VDC	12.5	bottom
Signal (no input)	1.8	bottom
Program @ 100% mod.	0	dB
MPX 26 kHz	10	bottom
67 kHz	13.1	bottom
Level for 45 dB SNR:	-88	dBm

RF P_o Levels

FMO	18	15 MW min
MULT-DRIV	180	120 MW min
FINAL AMP	6.0	5 W min

PCL-505 System Performance

Freq. (Hz)	Response	Distortion (%)
30	- .4 dB	.10
50	- .2 dB	.05
400	0 dB	.05
1,000	0 ref	.04
5,000	0 dB	.07
10,000	+ .2 dB	.06
15,000	0 dB	.09

Receiver Signal Meter Calibration

Microvolts	
5	1.8
10	2.5
20	6.5
50	9.5
100	11.1
200	12.7
500	14.0
1,000	14.2
1,500	14.5

System Noise

Ultimate SNR: 74 dB
SNR: 82 dB with noise reduction circuit active
Level for 60 dB SNR: -83 dBm
Squelch set between 15-20 20 µV

These readings were noted during final electrical test of the equipment and are intended for reference purposes. Readings may vary with component replacement or aging, adjustment, RF terminations, equipment installation, or path conditions.

Rev. 12 May 1983
ph

TABLE OF CONTENTS

INSTRUCTION MANUAL

MODELS PCL-505 AND PCL-505/C

AURAL STUDIO-TO-TRANSMITTER LINKS

1. INTRODUCTION

The Models PCL-505 and PCL-505/C Studio-to-Transmitter Links (STL) were designed to convey high-quality aural program material from a studio site to a transmitter site. Control and secondary programming subcarriers may also be simultaneously carried by the PCL-505. The wide-band "composite" version of this equipment, designated the PCL-505/C, allows the transmission of the complete composite FM stereo broadcast signal over only one link. Two PCL-505 units can be operated in the dual-link configuration to carry Left and Right audio channels for stereo operation. This equipment may also be used in intercity relay service. The environment in which this equipment must operate and the operators using it have both been carefully considered. Attention to design details and quality in construction distinguish the PCL-505.

2. SPECIFICATIONS

2.1 System

Monaural (PCL-505):

Audio Response	±0.4 dB, 30 Hz to 15 kHz
Audio Distortion	Less than 0.4%, 30 Hz to 15 kHz
Signal-to-Noise Ratio	Better than 68 dB
Emission	110F3 (no subcarrier) 110F9 (26 kHz control subcarrier) 230F9 (67 kHz program subcarrier)

Composite (PCL-505/C):

Wide-band Response	±0.2 dB, 30 Hz to 60 kHz ±0.5 dB, 30 Hz to 75 kHz
Wide-band Distortion	Less than 0.4%, 30 Hz to 60 kHz
De-emphasized wide-band output ultimate SNR	Better than 65 dB
Stereo Separation	Better than 35 dB (assuming stereo generator is better than 38 dB)
Stereo Cross Talk	Better than 43 dB, linear and nonlinear combined
Emission	226F9 (no subcarrier) 270F9 (67 kHz program subcarrier) 340F9 (110 kHz control subcarrier) 490F9 (185 kHz program subcarrier)
RF Frequency Ranges	148-174 MHz, 215-240 MHz, 300-330 MHz, 450-470 MHz, 890-960 MHz
Temperature Range	-20°C to +60°C

AURAL STUDIO-TRANSMITTER LINKS

Bulletin 278 A

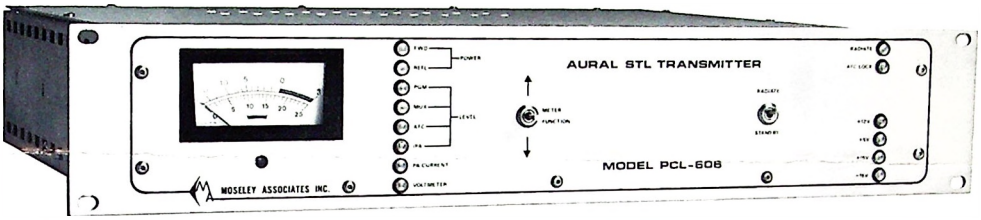

PCL-606 and PCL-606/C

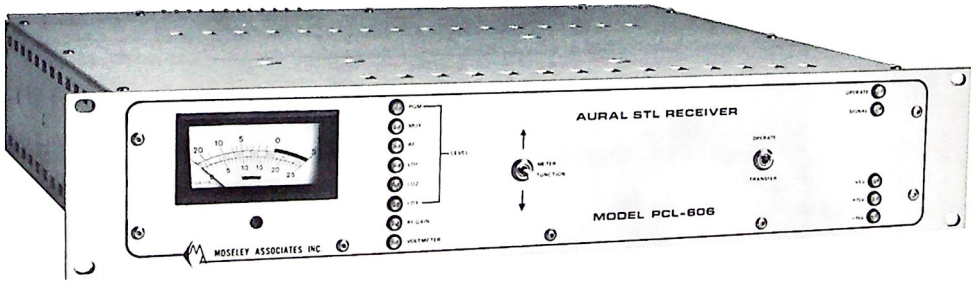

FOR 148-174 MHz
215-240 MHz
300-330 MHz
450-470 MHz
890-960 MHz

MOSELEY ASSOCIATES, INC.
A FLOW GENERAL COMPANY

PCL-606 and PCL-606/C

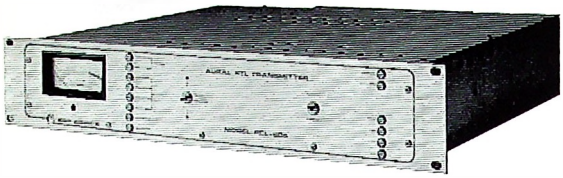

WHY STL?

Studio-transmitter link (STL) systems have traditionally offered broadcasters an alternative to leased telephone lines for conveying program information from the studios to a remote transmitter location. Telephone line charges have increased dramatically over the past few years, while line reliability and ultimate audio quality have either degraded or stayed the same. Studio-transmitter links offer the broadcaster complete control over program carriage with excellent reliability, two factors very important in today's broadcasting. Studio-transmitter links will also convey a program subcarrier, such as an SCA feed, as well as remote control information over the same economical link.

WHY PCL-606?

The PCL-606 and PCL-606/C Studio-Transmitter Links provide the broadcaster and industrial user alike with the highest quality program conveyance service currently available in equipment of this type. By the use of the latest technology available in today's market, significantly improved specifications and performance are achieved, even in areas overly congested in STL service or in areas presenting high density RF environments. The PCL-606, designed for highest quality monaural audio service, may be used in a dual configuration for stereo service where composite stereo is not desired. The PCL-606/C, the composite stereo version, conveys the composite stereo waveform with virtually no degradation, neither adding to nor taking away from the stereo waveform.

The PCL-606 and PCL-606/C Transmitter and Receiver are of an all-new design, using techniques and components heretofore unavailable. Extensive field testing was done on this new STL system to ensure highest performance in hostile RF environments. Enclosed module construction is used to reduce the possibility of RFI as well as allow easy service access to each printed circuit board. All normal service tuning adjustments are easily, yet securely, accessible through the tops of the modules and unit top covers, while extensive internal metering capabilities are standard in both the Transmitter and Receiver.

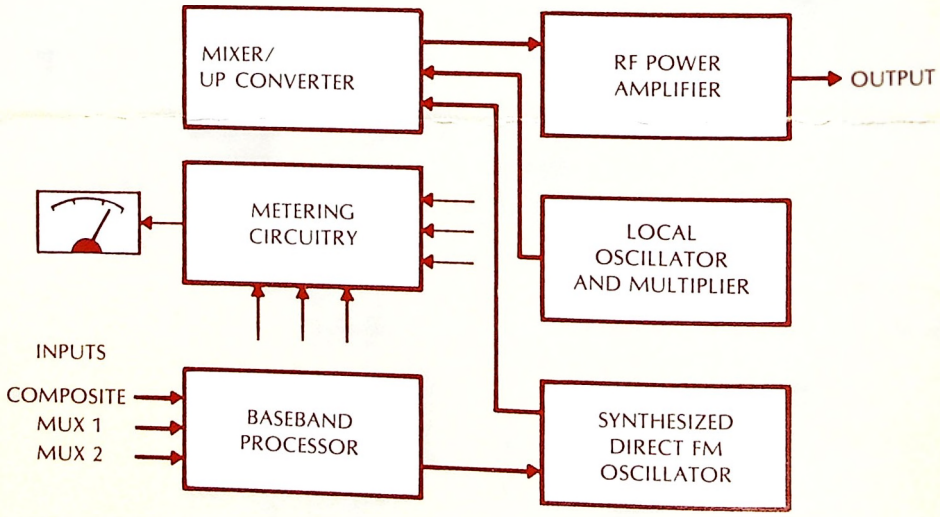

PCL-606/C TRANSMITTER BLOCK DIAGRAM

FOR 940-960 MHz COMPOSITE ONLY

PCL-606 and PCL-606/C

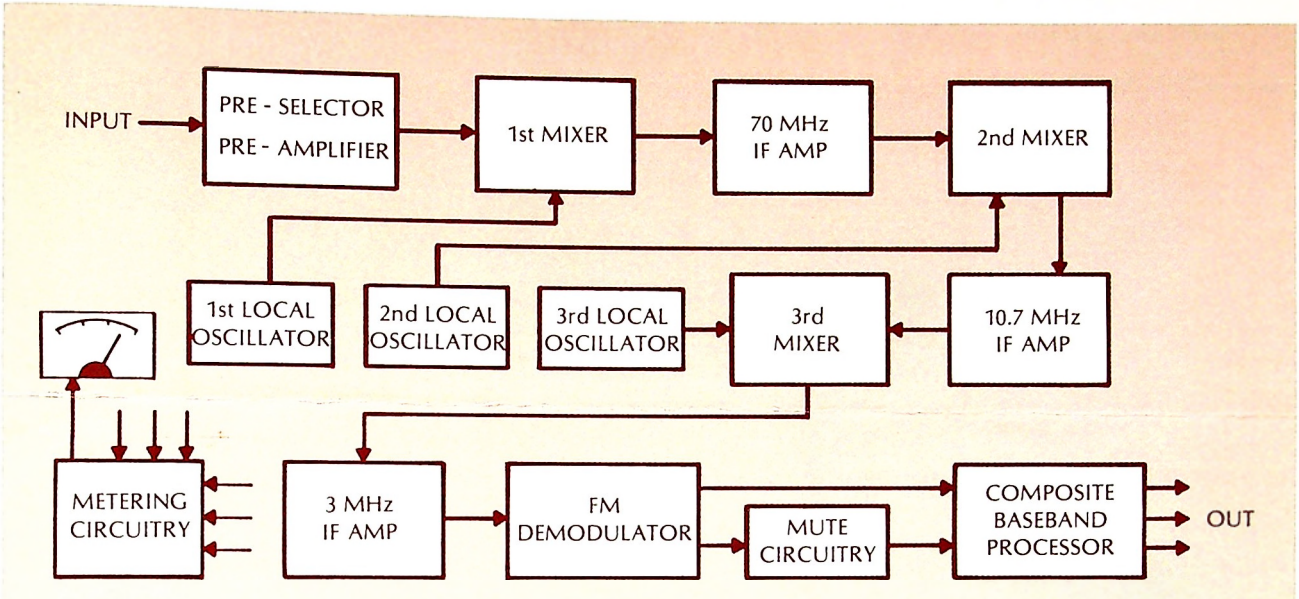

PCL-606/C RECEIVER BLOCK DIAGRAM

FOR 940-960 MHz COMPOSITE ONLY

TRANSMITTER

The PCL-606 and PCL-606/C Transmitters employ a direct FM modulation concept never used before in STL equipment. A synthesized reference oscillator is used for frequency and phase control of the direct FM oscillator. Transmitter FM modulated oscillator frequency conversion is done via a double balanced mixer, instead of employing the usual frequency multiplication of the modulated RF signal.

The transmitter includes a front panel meter with step-switch input selection to allow the metering of important parameters, such as RF forward output, RF reflected output, input levels, and AFC voltage. The metering system even includes built-in absolute value peak responding voltmeter capability, with internal LEDs to indicate DC polarity.

RECEIVER

The PCL-606 and PCL-606/C Receiver designs incorporate several performance and user-controlled features never before seen in point-to-point audio distribution equipment of this type. A PIN diode attenuator circuit is supplied for user adjustment of overall system signal to noise ratio. The PIN diode attenuator circuit reduces adjacent signal intermodulation products caused by input signal overloads.

The receiver IF bandwidth may be changed by the user to optimize the tradeoff between distortion and selectivity. All specifications shown are with the IF system in the "narrow" position, providing maximum selectivity.

The receiver demodulator is of an all-new design, offering extremely low distortion and noise characteristics. The demodulator is broadband and adjustment free, using digital pulse counting techniques for maximum fidelity.

The receiver includes a front panel meter with step-switch input selection to allow the metering of several parameters, including audio output level, subcarrier level, and RF input level in microvolts. The metering system includes built-in absolute value peak responding voltmeter capability with polarity indication. The metering circuit output appears on a back panel connector for remote metering.

Built-in transfer circuitry is standard in the PCL-606 and PCL-606/C Receivers to allow automatic changeover to a standby receiver in the event of a detected malfunction.

SPECIFICATIONS

PCL-606	SYSTEM	PCL-606/C
148-174 MHz, 215-240 MHz, 300-330 MHz 450-470 MHz, 890-960 MHz Specify exact operating frequency	**Frequency Range**	148-174 MHz, 215-240 MHz, 300-330 MHz 450-470 MHz, 890-960 MHz Specify exact operating frequency
Monophonic audio: ±0.25 dB or better 30 Hz to 15 kHz	**Frequency Response**	Composite: ±0.1 dB or better 30 Hz to 53 kHz, ±0.3 dB or better 53 kHz to 73 kHz
0.20% or less 30 Hz to 15 Hz (typically better than 0.1% at 1 kHz)	**THD & IMD Distortion: Narrow (Wide) I.F. Filter**	0.3% (0.2%) or less 30 Hz to 53 kHz, typically better than 0.1% (0.07%) at 1 kHz
Not applicable	**Stereo Separation**	48 dB or better, 50 Hz to 15 kHz (typically 50 dB or better)
Not applicable	**Nonlinear Crosstalk, Subchannel to Main Channel: Narrow (Wide) to I.F. Filter**	50 dB (54 dB) or better
Not applicable	**Nonlinear Crosstalk, Main Channel to Subchannel: Narrow (Wide) I.F. Filter**	50 dB (54 dB) or better
72 dB or better (typically 75 dB) below 100 % modulation	**Signal-to-Noise Ratio**	72 dB or better (typically 75 dB) below 100 % modulation, demodulated, de-emphasized left or right
3.5" (8.9 cm) high, 19" (48.3 cm) wide, 16" (40.6 cm) deep 0°-50°C	**Dimensions, Operating Temperature Range: Transmitter and Receiver**	3.5" (8.9 cm) high, 19" (48.3 cm) wide, 16" (40.6 cm) deep 0°-50°C
	TRANSMITTER	
10 Watts maximum, 5 Watts minimum 15 Watts maximum, 10 Watts minimum	**RF Power Output 890-960 MHz 148-470 MHz**	10 Watts maximum, 5 Watts minimum 15 Watts maximum, 10 Watts minimum
Type N Female, 50 ohm	**RF Output Connector**	Type N Female, 50 ohm
±40 kHz	**Deviation for 100% Modulation**	±50 kHz
Better than 0.00025% 0°C to 50°C	**Frequency Stability**	Better than 0.00025%, 0°C to 50°C
More than 60 dB below carrier level	**Spurious and Harmonic Emission**	More than 60 dB below carrier level
One Program and Two Subcarrier Channels	**Modulation Capability**	One Program and Two Subcarrier Channels
Monophonic: +10 dBm, 600 ohm, balanced, floating, barrier strip screw input. Multiplex: 1.5 V peak-to-peak 4 K ohms unbalanced, type BNC female connectors (2), frequency range 22-85 kHz	**Modulation Inputs**	Composite: 3.5 V peak-to-peak, 6 K ohms unbalanced, type BNC female connector. Multiplex: 1.5 V peak-to-peak, 4 K ohms unbalanced, type BNC female connectors (2), frequency range 110-185 kHz
100/120/220/240 VAC ±10%, 50/60 Hz, 70 Watts	**Power Source**	100/120/220/240 VAC ±10%, 50/60 Hz, 70 Watts
	RECEIVER	
Type N female, 50 ohm	**RF Input Connector**	Type N Female, 50 ohm
20 µV or less required for 60 dB SNR	**Sensitivity**	150 µV or less 60 dB SNR required for left or right channel de-emphasized demodulated,
3 dB I.F. bandwidth ±90 kHz 60 dB I.F. bandwidth ±400 kHz 80 dB I.F. bandwidth ±1 MHz	**Selectivity: Narrow (Wide) I.F. Filter**	3 dB I.F. bandwidth ±100 kHz (±150 kHz) 60 dB I.F. bandwidth ±450 kHz (±850 kHz) 80 dB I.F. bandwidth ±1 MHz (±2 MHz)
Monophonic: +10 dBm, 600 ohm, balanced, floating, barrier strip screw output. Multiplex: 1.5 V peak-to-peak, 100 ohms, unbalanced, type BNC female connectors (2)	**Modulation Outputs**	Composite: 3.5 V peak-to-peak, 100 ohm, unbalanced, type BNC female connector. Multiplex: 1.5 V peak-to-peak, 100 ohms unbalanced, type BNC female connectors (2)
100/120/220/240 VAC ±10%, 50/60 Hz, 30 Watts	**Power Source**	100/120/220/240 VAC ±10%, 50/60 Hz, 30 Watts

FOR FURTHER INFORMATION PLEASE CONTACT OUR MARKETING DEPARTMENT

PRINTED IN U.S.A. 4/82
SPECIFICATIONS SUBJECT TO CHANGE WITHOUT NOTICE

ALLIED BROADCAST EQUIPMENT
1201 E. 15th, Chaddick Center
Suite 309
Plano, TX 75074
Phone (214) 423-8667

2.2 Transmitter

Type	All solid-state, direct FM, indirect crystal control
RF Output	7 watts maximum, 5 watts nominal; Type N female connector
Frequency Stability	±0.0005%
Frequency Deviation	
Monaural (PCL-505)	40 kHz peak for 100% modulation (75 μsec pre-emphasis used in PCL-505)
Composite (PCL-505/C)	60 kHz peak for 100% modulation
Harmonic suppression	Better than 60 dB below carrier
Spurious emissions	Better than 65 dB below carrier
AM Noise	Better than 70 dB below carrier
Modulation inputs	
Monaural (PCL-505)	+10 dBm, 600Ω resistive, balanced, floating, barrier-strip connector
Composite (PCL-505/C)	3.5 V P-P, 12,000Ω, resistive, unbalanced, Type BNC connector
Multiplex	1.5 V P-P, 2000Ω, resistive, unbalanced, Type BNC connector
Power Requirement	120/240 VAC ±10%, 50-60 Hz, 60 watts
Dimensions	8.9 cm (3.5") high, 48.4 cm (19") wide, 40.6 cm (16") deep
Shipping Weight (domestic)	11 kg (25 lbs.)

2.3 Receiver

Monaural (PCL-505)	
Program Output	+10 dBm, 600Ω, balanced, floating, barrier-strip connector
Multiplex Outputs	22-85 kHz, 1.5 V P-P behind 1000Ω, unbalanced, Type BNC connectors
Sensitivity	30 dB signal-to-noise ratio, -100 dBm 60 dB signal-to-noise ratio, -81 dBm (program output, de-emphasized)
3 dB I.F. Bandwidth	180 kHz
80 dB I.F. Bandwidth	2.5 MHz
Composite (PCL-505/C)	
Wide-band Output	3.5 V P-P behind 1000Ω, unbalanced, Type BNC connector
Multiplex Outputs	100-240 kHz, 1.5 V P-P behind 1000Ω, unbalanced, Type BNC connectors
Sensitivity	30 dB signal-to-noise ratio, -100 dBm 60 dB signal-to-noise ratio, -73 dBm (wide-band output, de-emphasized)
3 dB I.F. Bandwidth	330 kHz
80 dB I.F. Bandwidth	3 MHz
Power Requirement	120/240 VAC ±10%, 50-60 Hz, 12 watts; 13.5 ±1 VDC, 0.2A
Dimensions	4.5 cm (1.75") high, 48.4 cm (19") wide, 34.9 cm (13.75") deep
Shipping Weight (domestic)	7 kg (15 lbs.)

3. UNPACKING

The PCL-505 transmitter and receiver should be carefully unpacked and inspected for any shipping damage. Keep all packing material until performance is confirmed. Should inspection reveal shipping damage, or should hidden damage be revealed, immediately file a claim with the carrier.

It is recommended that the top covers on both the transmitter and receiver be removed for a brief superficial inspection. There are two screws that are used to hold the FMO in place during shipment. They should be removed from the bottom of the transmitter chassis before installation. Retain these screws and reinstall them if the transmitter is to be moved. This will prevent damage to the modules inside.

> NOTE: DO NOT REMOVE THE COVERS ON THE TRANSMITTER RF POWER AMPLIFIER ASSEMBLY. DO NOT ATTEMPT DISASSEMBLY OR INSPECTION OF THE RECEIVER INPUT BANDPASS ASSEMBLY. DO NOT MAKE ANY ADJUSTMENTS OF ANY KIND TO THE EQUIPMENT. DO NOT APPLY POWER UNTIL SPECIFICALLY INSTRUCTED TO DO SO LATER IN THIS MANUAL.

The inspection should ascertain that the various modules, assemblies, and components are mechanically secure. After the inspection, replace the covers.

4. INSTALLATION

Although the PCL-505 is intended to provide a wireless equivalent to a wire-line interconnection between a studio and a transmitter site, there are some basic differences:

a) If the audio level applied to the transmitter is excessive, distortion will result and occupied RF bandwidth will increase.

b) Undermodulation or operation with lossy feedlines or operation over extremely long distances may result in degradation of the signal-to-noise ratio of the received signal.

c) The PCL-505 incorporates pre-emphasis (treble boost) in the transmitter and de-emphasis (treble cut) in the receiver to enhance the signal-to-noise ratio. A by-product of this process is an increased susceptibility to overload by higher audio modulating frequencies.

d) The PCL-505 has the bandwidth and linearity to carry control tones and secondary program material in the form of subcarriers.

e) The PCL-505/C uses special circuitry to allow the transmission of the composite stereo waveform (as well as control and program subcarriers) over a single link.

Drawings illustrating the various connections to be made to the PCL-505 transmitter and receiver are shown in Figures 1 through 6.

The PCL-505 equipments should be mounted in a standard rack, preferably between waist and shoulder height. The associated antenna should be mounted at a height such that a reasonably clear path is available between the transmitter and receiver sites. A path having 0.6 Fresnel zone clearance is recommended. Either vertical or horizontal polarization may be used, but the polarization must be the same at each end of the path. Generally, vertical polarization is employed.

Interconnections between the transmitter and its antenna (and between the receiver and its antenna) should be made using coaxial cable whose loss characteristics have been determined by an engineering study. For example, half-inch diameter foam-filled coaxial cable (with a loss of 3 dB per hundred feet) will have a loss of 9 dB if the length of line totals 300 feet. Such a loss will generally be tolerable if the path is short, for example five to ten miles. It might prove disastrous on grazing or long paths. The gain of the transmitting and receiving antennas must also be considered.

Noting that the better feedlines are relatively inflexible, Moseley Associates has made available short "pigtail" assemblies. These are to be attached to the ends of the actual feedlines, and they enable movement of the equipment with less chance of harm to the

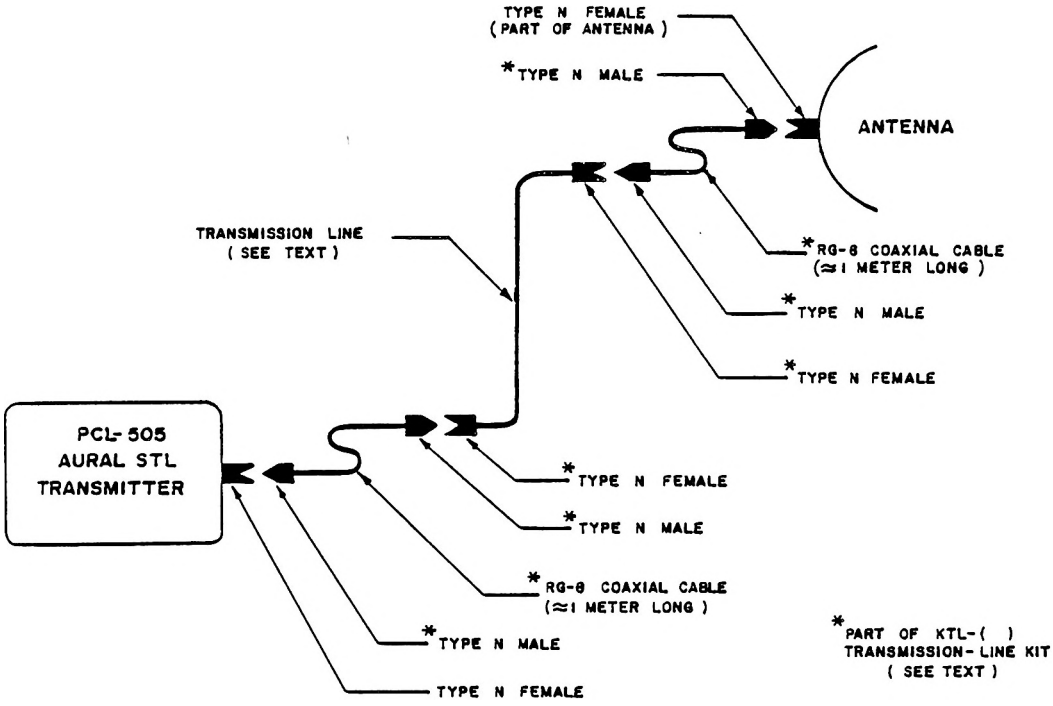

PCL-505 TRANSMITTER RF CONNECTIONS

FIGURE 1

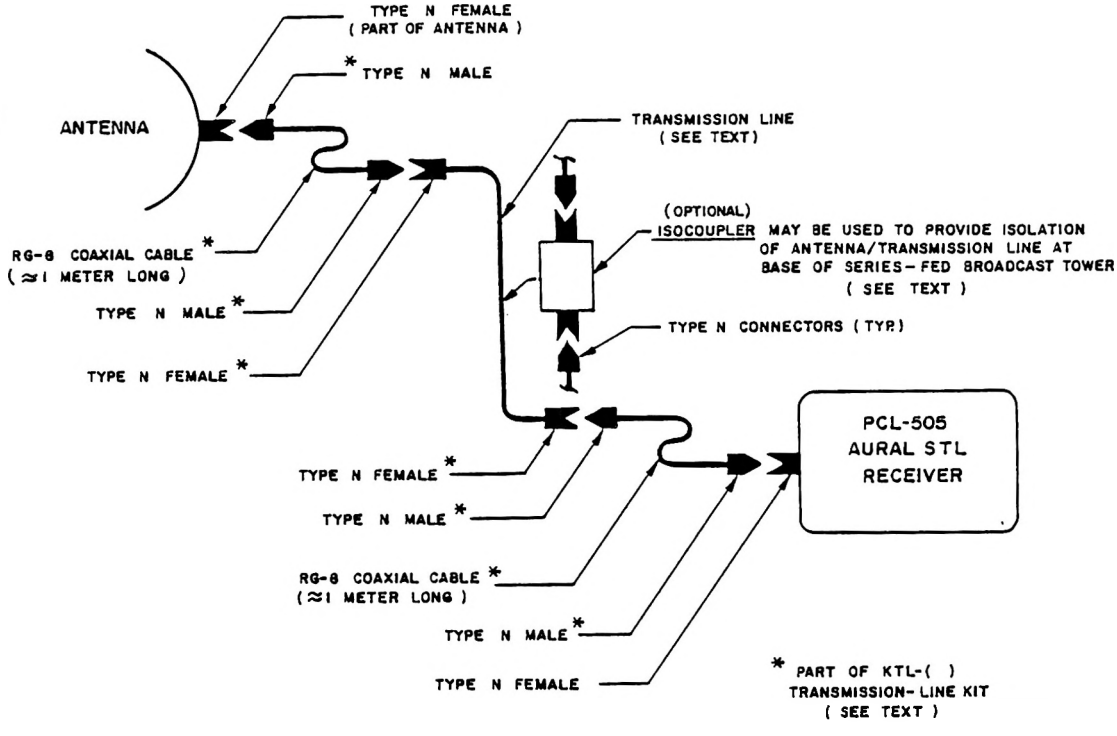

PCL-505 RECEIVER R F CONNECTIONS

FIGURE 2

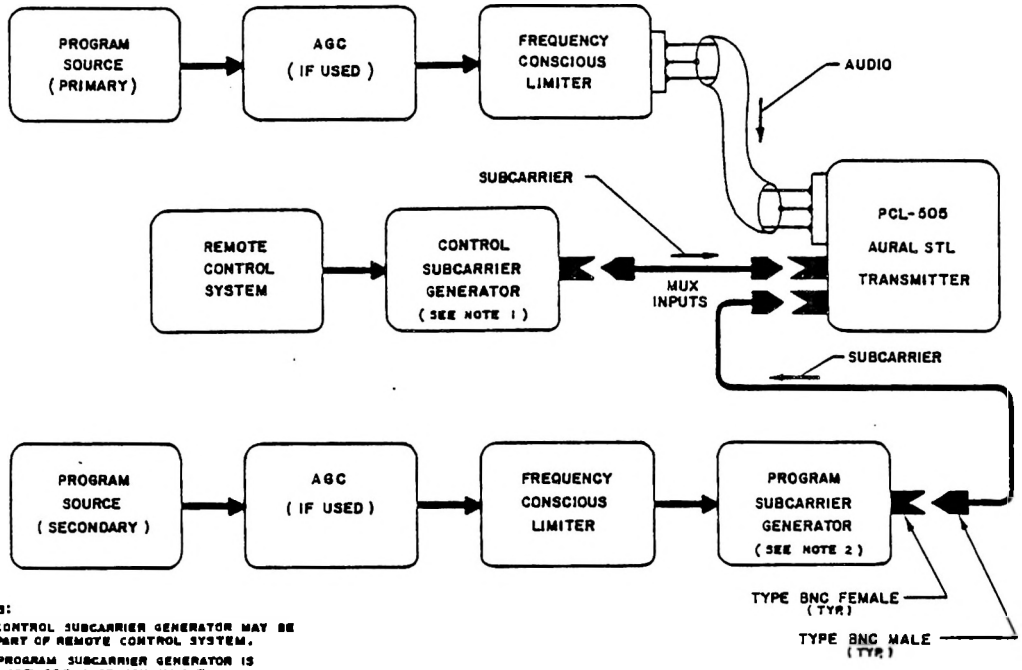

NOTES:

1. CONTROL SUBCARRIER GENERATOR MAY BE PART OF REMOTE CONTROL SYSTEM.
2. PROGRAM SUBCARRIER GENERATOR IS MODEL SCG-6 OR EQUIVALENT.
3. COAX CABLE IS RG58A/U OR EQUAL.

PCL-505 TRANSMITTER (MONO)
PROGRAM AND MULTIPLEX CONNECTIONS
FIGURE 3

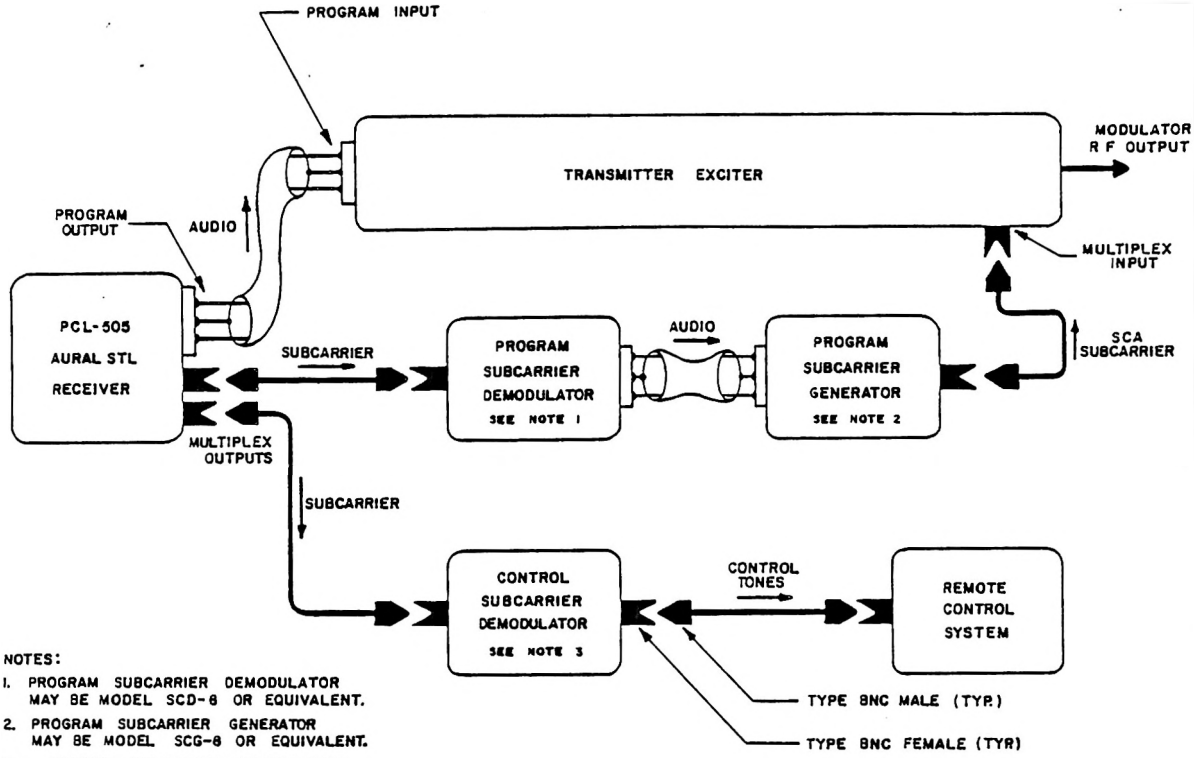

NOTES:

1. PROGRAM SUBCARRIER DEMODULATOR MAY BE MODEL SCD-6 OR EQUIVALENT.
2. PROGRAM SUBCARRIER GENERATOR MAY BE MODEL SCG-6 OR EQUIVALENT.
3. CONTROL SUBCARRIER DEMODULATOR MAY BE PART OF REMOTE CONTROL SYSTEM.
4. COAXIAL CABLE IS RG58A/U OR EQUAL.

PCL-505 RECEIVER (MONO)
PROGRAM AND MULTIPLEX CONNECTIONS
FIGURE 4

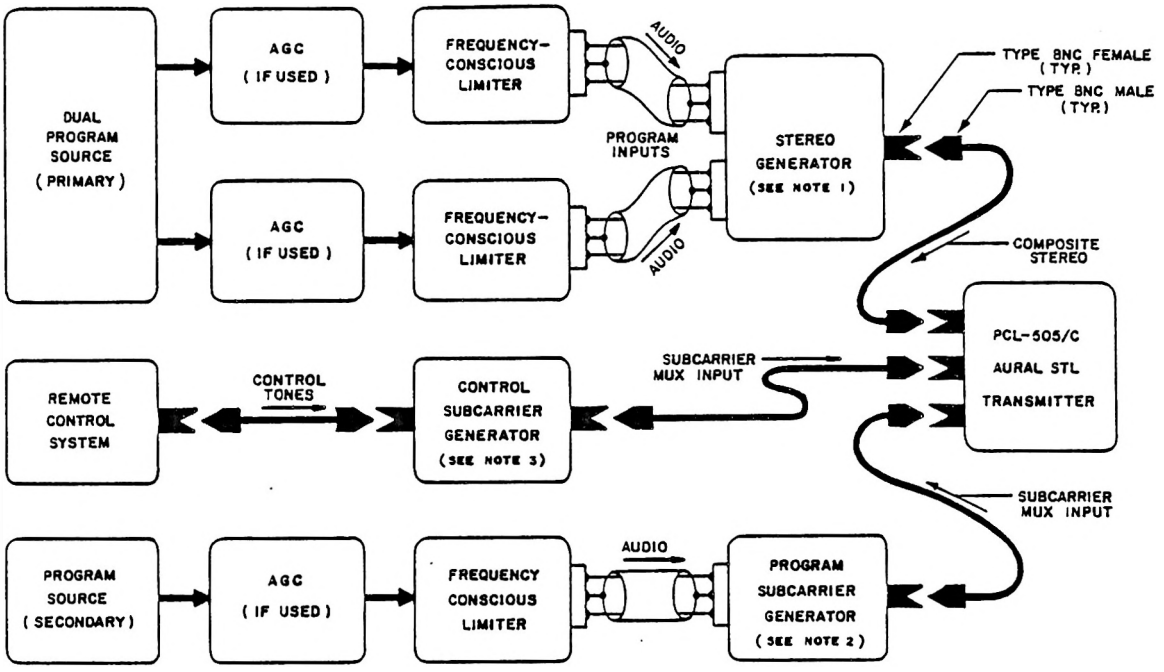

NOTES:
1. STEREO GENERATOR MAY BE MODEL SCG-9 OR EQUIVALENT.
2. PROGRAM SUBCARRIER GENERATOR MAY BE MODEL SCG-8 OR EQUIVALENT.
3. CONTROL SUBCARRIER GENERATOR MAY BE PART OF REMOTE CONTROL SYSTEM.
4. COAX CABLE IS RG 58A/U OR EQUAL.

PCL-505/C TRANSMITTER (COMPOSITE)
PROGRAM AND MULTIPLEX CONNECTIONS

FIGURE 5

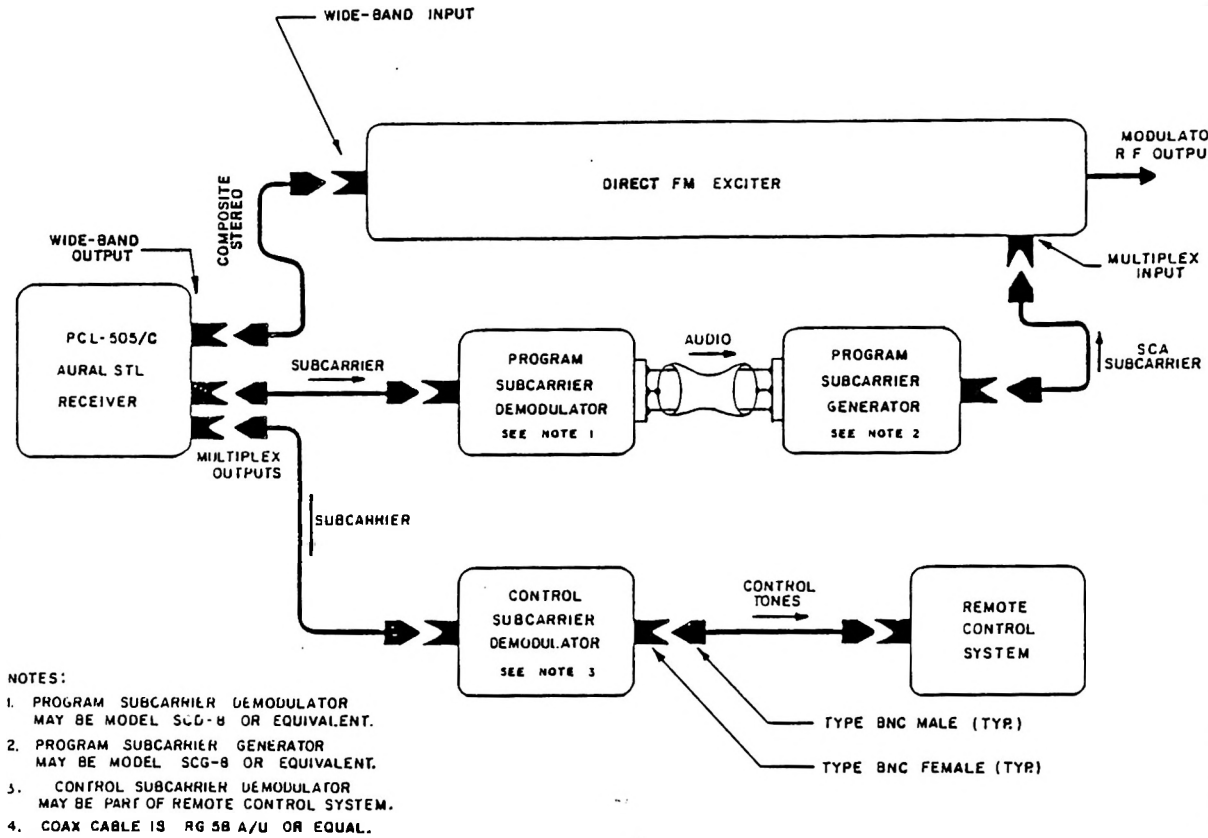

NOTES:

1. PROGRAM SUBCARRIER DEMODULATOR MAY BE MODEL SCD-8 OR EQUIVALENT.
2. PROGRAM SUBCARRIER GENERATOR MAY BE MODEL SCG-8 OR EQUIVALENT.
3. CONTROL SUBCARRIER DEMODULATOR MAY BE PART OF REMOTE CONTROL SYSTEM.
4. COAX CABLE IS RG 58 A/U OR EQUAL.

PCL-505/C RECEIVER (COMPOSITE)
PROGRAM AND MULTIPLEX CONNECTIONS
FIGURE 6

equipment or feedline. These assemblies carry Moseley Associates part number KTL-( ). As an example, use KTL-4 assemblies for Andrew foam-dielectric half-inch line. Each KTL-( ) kit consists of two pigtails with connectors attached, and two individual Type N Female coaxial connectors. Each such kit is sufficient for installation of one end of a link. Two kits would be needed if pigtails are desired at each end of a link.

Should it be desired to mount the receiving antenna on a series-fed Standard Broadcast tower, the required isolation may be accomplished as illustrated in Figure 2. At the base of the tower, a Moseley Associates Isocoupler is used to allow passage of the STL RF signal while introducing no particular change in the tower base impedance. Isolation at Standard Broadcast frequencies is very high, and the Isocoupler introduces a minimal loss to the STL RF signal.

For monaural operation, the output of the program limiter is applied to the program input on the PCL-505 transmitter. Applied to the transmitter multiplex inputs are subcarrier signals (if applicable) for control and secondary programming purposes.

For dual-link stereo operation, the outputs of the program limiters are applied to the program inputs on the pair of PCL-505 transmitters. Choose one link arbitrarily and (if applicable) connect the control subcarrier generator output to a multiplex input on that transmitter. Use the other link (if applicable) for the program subcarrier; connect the program subcarrier generator output to a multiplex input on that transmitter.

The program lines use barrier-strip connections and operate at +10 dBm at <u>low</u> audio frequencies. The multiplex inputs operate at 1.5 volts peak-to-peak and use Type BNC connectors.

For composite (single-link stereo) operation, the output of the program limiters are applied to the stereo generator, such as the Moseley Associates Model SCG-9. The output of the stereo generator is then applied to the wide-band input on the PCL-505/C transmitter. Also applied to the transmitter multiplex input connectors are subcarriers (if used) for control and secondary programming purposes. Multiplex Channel #1 should be used for the control subcarrier while Multiplex Channel #2 should be used for secondary programming.

The program inputs to the SCG-9 Stereo Generator use barrier-strip connections and operate at +10 dBm at low audio frequencies. The output from the stereo generator is 3.5 volts peak-to-peak for full modulation and uses a Type BNC connector.

At the receiver site, the PCL-505 monaural (or dual-link stereo) receiver program output is applied to the program input(s) of the exciter or stereo generator. Also available from the receiver multiplex outputs are the subcarrier outputs to operate subcarrier equipment such as remote control and secondary program demodulators.

The program line uses barrier-strip connections and delivers +10 dBm at low audio frequencies. The multiplex outputs deliver 1.5 volts peak-to-peak and use Type BNC connectors.

The wide-band output from the PCL-505/C composite receiver is applied to the wide-band or composite input of the direct-FM exciter. The receiver multiplex outputs are also available to operate remote control and secondary programming demodulators.

The wide-band output from the receiver is 3.5 volts peak-to-peak behind 100Ω and uses a Type BNC connector. The multiplex outputs deliver 1.5 volts peak-to-peak and also use Type BNC connectors.

If either the transmitter or receiver is to be operated from 240 VAC, refer to the schematics for rewiring information.

With the transmitter properly terminated, power may now be applied to both the transmitter and receiver. At this time, system performance may be checked on a back-to-back basis.

Each transmitter metering position should be checked. The readings may be compared with the values shown in the final factory test data. It would be wise to record these readings for future reference. Note that the forward power (and the reflected power, in particular) may deviate somewhat from the final test values due to possible VSWR of the load.

Now the PCL-505 may be installed in the operating configuration and a skeleton proof of performance run. See paragraph 7.4 or 7.5 as applicable.

5. OPERATION

Routine operation of the PCL-505 system is very simple. Power should be applied to both the transmitter and the receiver at all times.

> NOTE: USER MUST COMPLY WITH APPLICABLE OPERATING REQUIREMENTS OF GOVERNING REGULATIONS.

The transmitter unit may be remotely controlled and metered. Refer to Paragraph 7.8 on remote control of the transmitter. When no other meter readings are being taken, it is suggested that the program position be used to continuously monitor program modulation. Table 1 on the following two pages discusses front-panel controls and switches for both the receiver and the transmitter.

6. CIRCUIT DESCRIPTION

6.1 Transmitter

The block diagram of the PCL-505 transmitter is shown in Figure 7. Individual module block diagrams are shown in Figures 8 through 15.

6.1.1 Input Interface

Modulation input to the transmitter is applied to the modulation circuitry via an Input-Interface module (see Figure 8). The monaural version of this module terminates the program input with a pi-type attenuator. This assures a resistive input and allows various nominal input levels to be accommodated.

The output from the pad is routed to the input isolation transformer and then back to the board. At this point, there is an active pre-emphasis system with an amplifier whose gain is adjustable.

Following this amplifier is a 16 kHz low-pass filter to prohibit program components from interfering with any subcarriers which may also be applied to the link. The output of the filter is applied to an active summing amplifier.

The composite version of this module, used in the PCL-505/C, is similar except that it contains no input pad, has no pre-emphasis, and does not contain a low-pass filter.

TABLE 1

MODEL PCL-505 FRONT-PANEL CONTROLS AND SWITCHES

TRANSMITTER

RADIATE	Turns power on or off to multiplier driver module thus carrier is on or off.

Metering Switch Positions

PROGRAM	Meters main program applied to modulator. The "0" on the top meter scale represents 100% modulation.
MPX.	Meters subcarriers applied to modulator. Percent injection is read on lower scale.
AFC	Meters DC level of AFC system. (See AFC ADJUST - next page)
FWD. PWR.	Meters forward RF power to antenna.
RFL. PWR.	Meters reflected RF power from antenna.
+VDC	Meters +13.5 VDC power supply on the bottom meter scale.
REF. OSC.	Meters reference oscillator and associated circuitry. Normal is between 10 and 20 on the bottom meter scale.
H.F. DIVIDER	Meters FMO, H.F. Buffer and Divider, and associated circuitry. Normal is between 10 and 20 on the bottom meter scale.
IPA DRIVE	Meters output of multiplier module driving power amplifier. Normal is 15 or more on the bottom meter scale.

FINAL CURRENT	Meters current of final power amplifier stage. Bottom scale is actual current used by the output transistor.
AFC ADJUST	Screwdriver adjustment to set AFC to center of AFC range. Shown on meter in AFC position.
POWER	Green L.E.D. is illuminated when primary power is applied to the transmitter.

RECEIVER

Metering Switch Positions

+VDC	Meters +13.5 VDC power supply on the bottom meter scale.
SIGNAL	Meters relative received signal strength. (See Final Test Data)
PROGRAM	Meters received program level. The "0" on the top meter scale represents 100% program modulation of received signal.
MPX.	Meters received subcarrier levels. This reading is relative and should be noted for future reference.
POWER	Green L.E.D. is illuminated when primary power is applied to receiver.

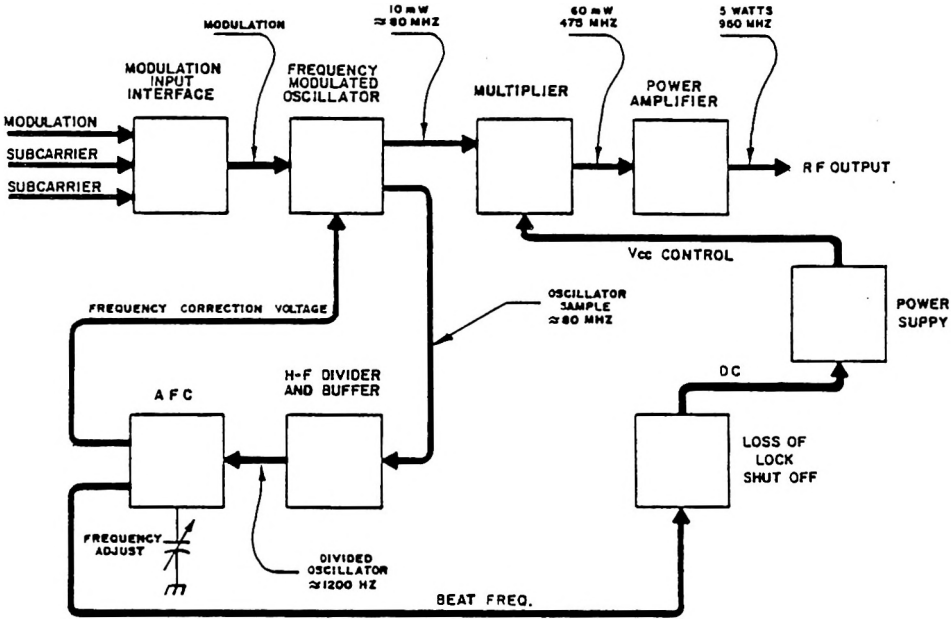

BLOCK DIAGRAM
PCL-505 TRANSMITTER
(MONAURAL OR COMPOSITE)

FIGURE 7

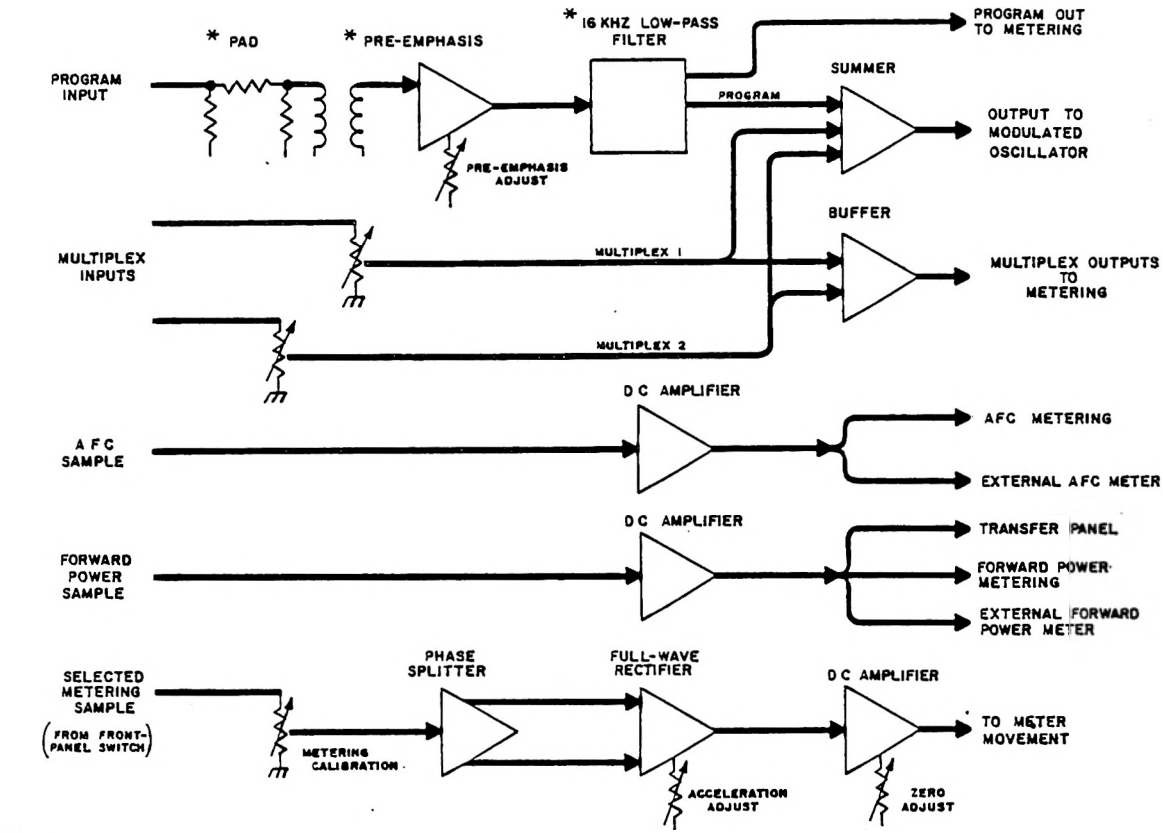

* NOT USED IN PCL-505/C

PCL-505 INPUT INTERFACE AND METERING AMPLIFIERS
(MONAURAL OR COMPOSITE)
FIGURE 8

Both the monaural module and the composite module contain identical subcarrier-processing circuitry. Subcarrier inputs are terminated with individual level-setting potentiometers, whose outputs are applied to the active summer. The potentiometer outputs are also applied to a separate buffer amplifier for subsequent application to the metering system.

Also included on the Input-Interface module is a series of metering amplifiers. One metering amplifier processes the selected sample in a peak-sensitive fashion for reading either program modulation or subcarrier injection. This amplifier has a calibration control, a phase-splitter, and a full-wave peak-sensitive rectifier. The rectifier output is applied to a DC amplifier for application to the panel meter. Adjustable meter acceleration and zeroing controls are included in this amplifier.

A second metering amplifier buffers the AFC voltage for application to an external meter movement. A third amplifier buffers the forward power sample. A fourth amplifier buffers this same sample and allows its application to an external meter.

The external meters referred to here are those involved in remotely controlling the PCL-505 transmitter. For further information on this, see the section headed "Remote Control of the STL Transmitter."

6.1.2 Modulated Oscillator

The total modulation output from the summing amplifier on the Input-Interface module is applied to the frequency-modulated oscillator, shown in block diagram form in Figure 9.

A low-noise oscillator is frequency-modulated by a pair of varactor diodes. One of these modulators is used for frequency control and the other is used for program modulation. Subcarrier modulation, if used, is merely summed with the program modulation.

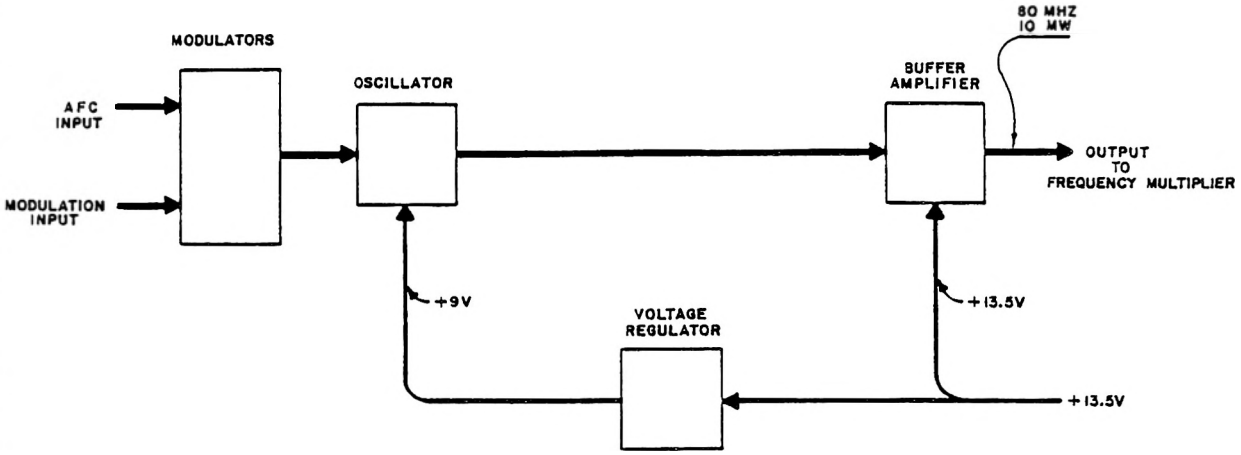

PCL-505 TRANSMITTER FREQUENCY-MODULATED OSCILLATOR

(MONAURAL OR COMPOSITE)

FIGURE 9

The output of the oscillator is applied to an amplifier. The buffer amplifier operates from 13.5 volts while the oscillator and program modulator bias operate from a regulator whose output is 9 volts. The primary purpose of this regulator is noise reduction.

The output of this module, in the region of 80 MHz and a power level of about 12 milliwatts, is applied to the frequency multiplier.

6.1.3 Frequency Multiplier

The output of the modulated oscillator is applied to the frequency multiplier, shown in block diagram form in Figure 10.

The first stage of this module is a buffer, followed by a doubler, tripler driver, and finally a power amplifier.

The RF output from this module is in the 485 MHz region at a typical power level of 120 milliwatts. It is applied to the power amplifier module. The RF output is also rectified by a diode and applied to the front-panel meter in the IPA position.

The input drive signal to the frequency multiplier is sampled and provides excitation to the AFC system.

6.1.4 Power Amplifier (890-960 MHz)

The transmitter power amplifier (see Figure 11) accepts the 100 milliwatt 445-480 MHz signal from the buffer multiplier, doubles and amplifies it to a nominal 5 watts. The first stage is a doubler with input and output filtering and matching. The second and final stages are 890-960 MHz amplifiers. A nine section lowpass filter follows the final transistor to reduce all harmonics. Following the final RF amplifier filter is a dual directional coupler used to assist in the tune-up of the amplifier assembly and to provide drive to the panel meter.

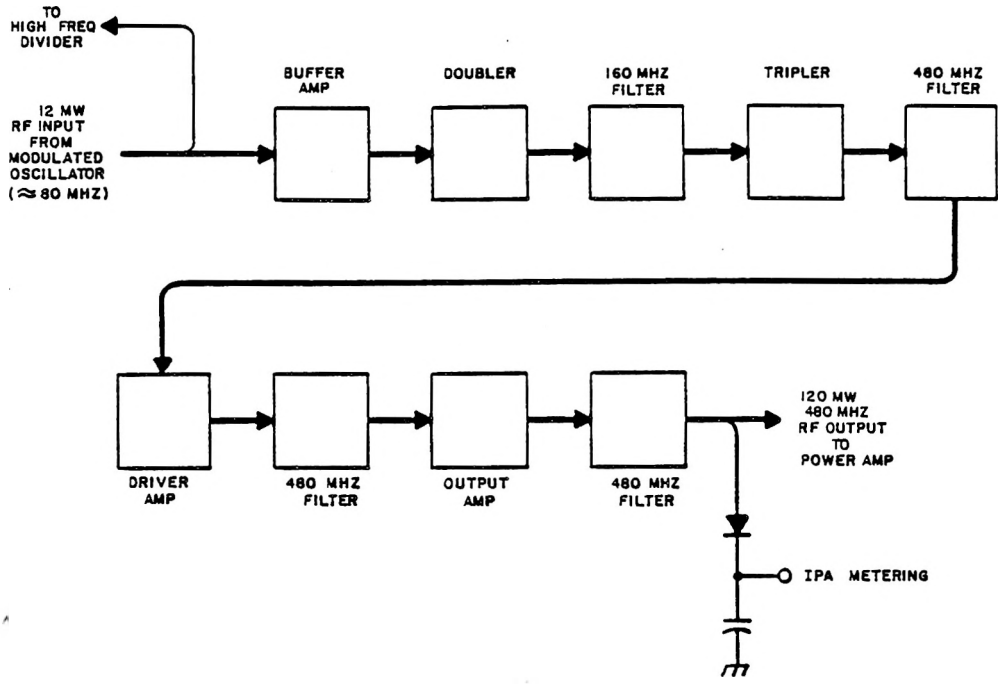

PCL-505 TRANSMITTER MULTIPLIER

(MONAURAL OR COMPOSITE)

FIGURE 10

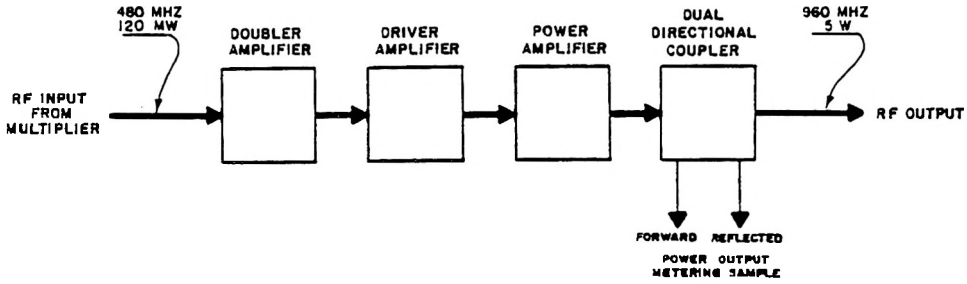

PCL-505 R F POWER AMPLIFIER

(MONAURAL OR COMPOSITE)

FIGURE 11

Section 6.1.5 deleted from text

6.1.6 High-Frequency Buffer and Divider

A sample of the modulated oscillator signal is taken from the input of the frequency multiplier and is applied to the High-Frequency Buffer and Divider module. The block diagram of this module is shown in Figure 12.

The first three stages of this module provide amplification and shaping to drive a high-frequency, integrated-circuit frequency divider. This divider accepts the amplified and shaped, modulated-oscillator signal and divides it by a factor of 16 down to the 5 MHz region.

This signal is applied to an amplifier which interfaces the high-frequency signal to a form acceptable to another divider, for further division down to the 1200 Hz region.

The output of this divider is applied to an output buffer amplifier which both drives the next stage of the AFC system and provides a metering sample.

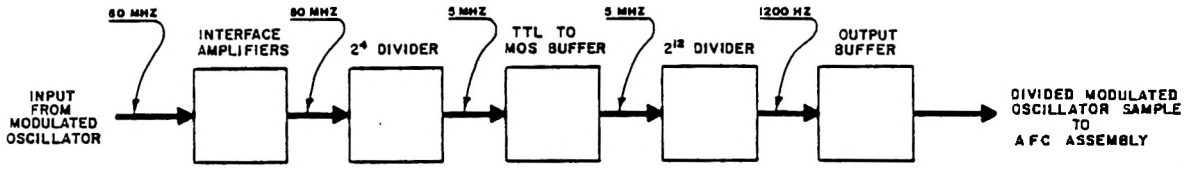

PCL-505 HIGH-FREQUENCY BUFFER AND DIVIDER
(MONAURAL OR COMPOSITE)

FIGURE 12

6.1.7 AFC

The AFC module (see Figure 13) generates a stable reference signal in the 5 MHz region (carrier frequency divided by a factor of 192). The oscillator is crystal-controlled, with the crystal located in an oven which is proportionally controlled for best stability.

The reference signal is applied to an integrated-circuit frequency divider for division down to the 1200 Hz region. This 1200 Hz signal, along with the 1200 Hz signal from the divided-down modulated oscillator, is applied to an integrated-circuit phase detector. The output of the phase detector is applied to a 30 Hz low-pass filter to remove the 1200 Hz component present in its output, leaving only the DC frequency-correcting voltage. This voltage is applied to an active lag-compensation circuit for processing prior to application to the frequency-modulated oscillator. The output of the lag compensator is applied to the AFC input on the modulated oscillator for frequency stabilization.

Note that the center frequency stability of the transmitter is determined by the 5 MHz oscillator; if the modulated oscillator should attempt to drift, the only effect will be a change in the AFC frequency-correcting voltage.

The oven temperature is sensed by a silicon diode mounted in the oven in contact with the heating element. A current is applied to this diode, and the voltage drop across it is compared with a voltage derived from a potentiometer. The output of this comparison amplifier is applied to a power amplifier which drives the oven heating element (resistor). The entire heating-control system operates on regulated DC and so is noise-free.

6.1.8 Power Supply

The block diagram of the power supply for the PCL-505 is shown in Figure 14.

Primary AC power is applied to the power transformer via an appropriate fuse. A bridge rectifier on the secondary provides unregulated DC which is applied to a series regulator. This regulator has current limiting and adjustable output voltage.

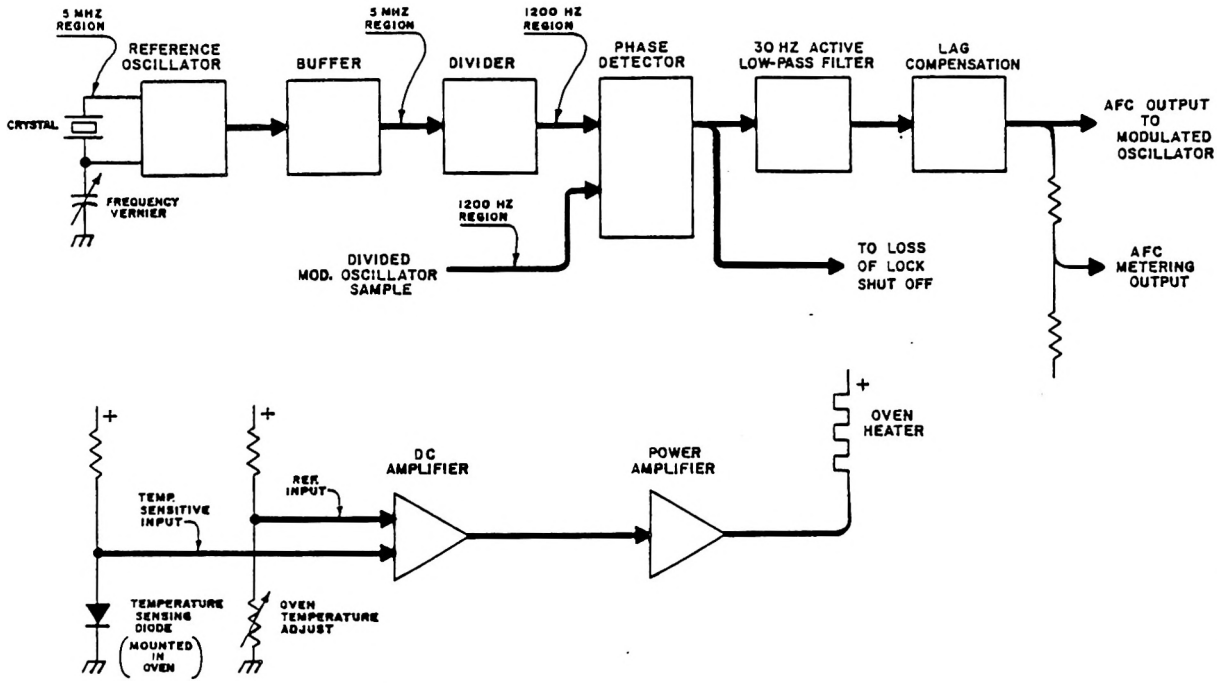

PCL-505 AUTOMATIC FREQUENCY CONTROL

(MONAURAL OR COMPOSITE)

FIGURE 13

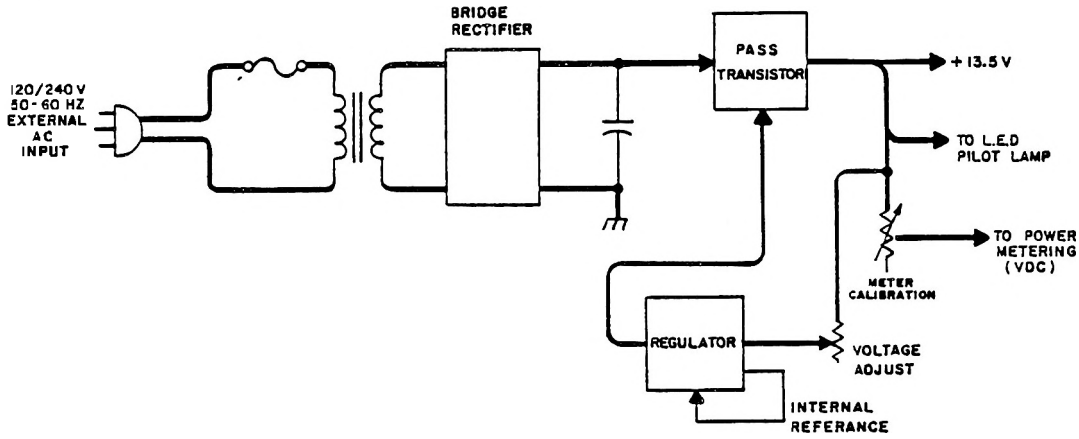

PCL-505 POWER SUPPLY REGULATOR
(MONAURAL OR COMPOSITE)

FIGURE 14

6.1.9 LOSS OF LOCK SHUT OFF

The function of this circuit (see below) is to remove the 13.5 volt Direct Current (DC) from the Multiplier Driver which in turn turns off the RF output power. The circuit is comprised of four (4) subcircuits. The first is an active 250 Hz low-pass filter which passes the beat note from the AFC when the Frequency Modulated Oscillator (FMO) becomes unlocked from the AFC Reference Oscillator. The second is a comparator which amplifies the beat note when it is greater in amplitude than the pre-set comparator level. The third is a detector which changes the beat note to DC. The fourth is a clamp switch which removes the DC drive from the base of a series gate transistor on the DC regulator printed-circuit board which in turn removes the 13.5 volts DC from the Multiplier Driver.

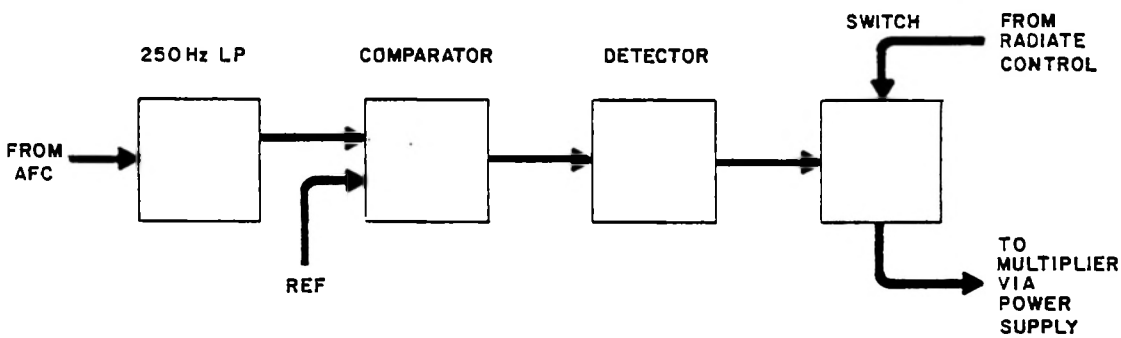

Also included on this module are miscellaneous control and metering components.

6.2 Receiver (890-960 MHz)

The block diagram of the PCL-505 receiver is shown in Figure 16. Individual module block diagrams are shown in Figures 17 through 25.

6.2.1 Input Bandpass Filter

The input to the PCL-505 receiver is applied to a bandpass filter (see Figure 17). This filter is down 3 dB at about 30 MHz from the carrier frequency and is down 50 dB at about 120MHz from the carrier frequency. The input and output impedances of this filter are 50Ω.

6.2.2 RF Preamplifier

The output of the filter is applied to a preamplifier (see Figure 18). This amplifier has a 4 dB noise figure and provides about 12 dB of gain at the operating frequency. Input and output impedances are 50Ω.

6.2.3 Balanced Mixer

The output of the preamplifier is applied to the third module, a balanced mixer (see Figure 19). This mixer provides conversion to the 74 MHz first I.F. Immediately following the mixer proper is a single tuned circuit at 74 MHz and then a low-noise I.F. amplifier. Two more tuned circuits at 74 MHz, a high-gain I.F. amplifier, and then another pair of tuned circuits complete this module. The output is at 50Ω.

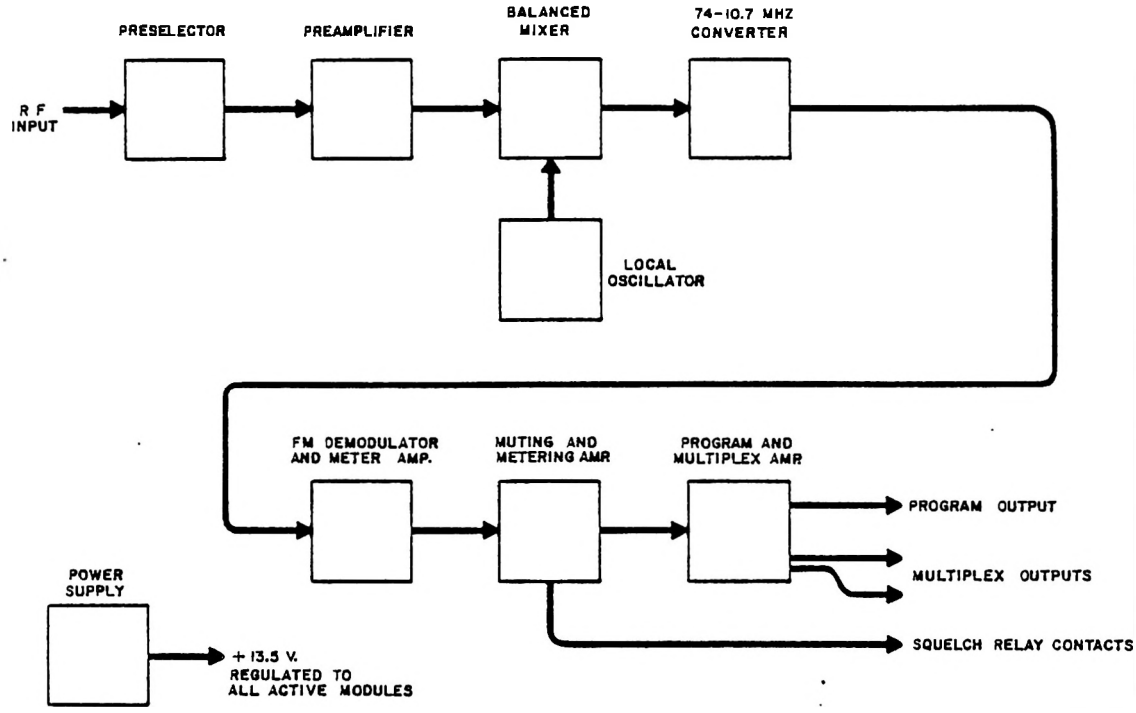

PCL-505 RECEIVER BLOCK DIAGRAM
(890-960 MHZ MONAURAL OR COMPOSITE)

FIGURE 16

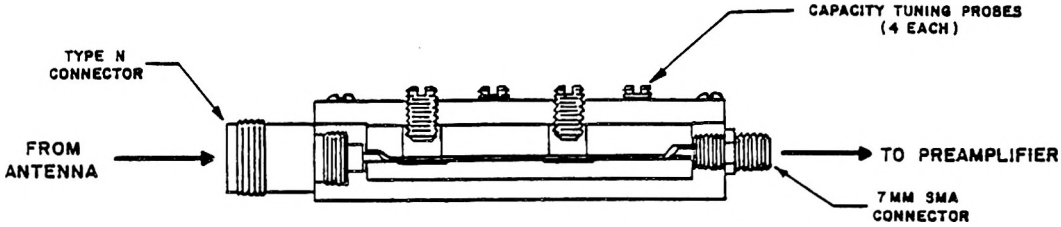

PCL-505 RF PRESELECTOR
(890-960 MHZ)
(MONAURAL OR COMPOSITE)

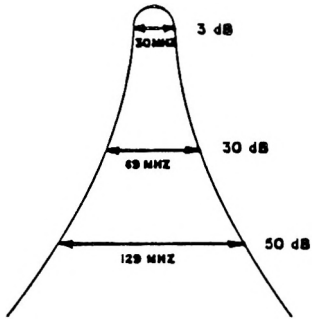

TYPICAL RESPONSE
(890-960 MHZ)

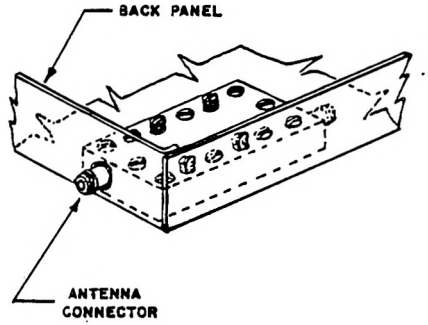

PRESELECTOR LOCATION

FIGURE 17

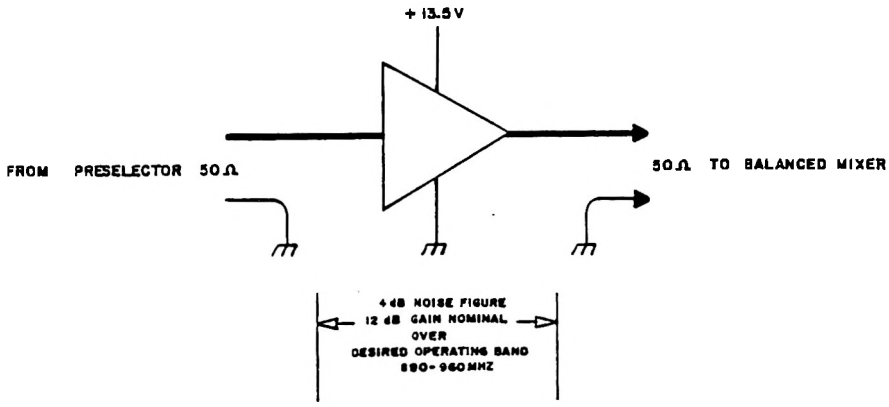

PCL-505 RECEIVER
ON-FREQUENCY R F PREAMPLIFIER
(MONAURAL OR COMPOSITE)

FIGURE 18

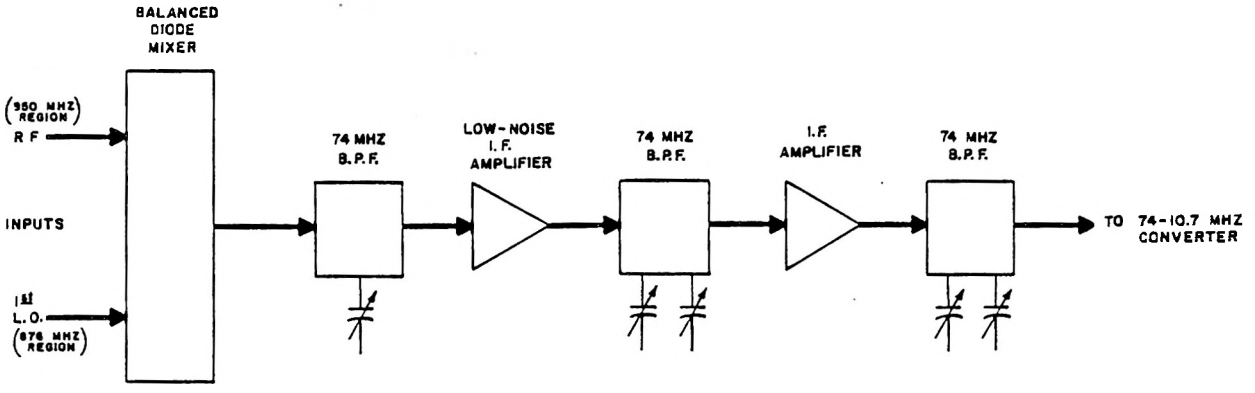

PCL-505 BALANCED MIXER (FIRST)

(890-960 MHZ MONAURAL OR COMPOSITE)

FIGURE 19

6.2.4 Local Oscillator (890-960 MHz)

Excitation to the first mixer and local-oscillator input port is provided by the Local Oscillator module (see Figure 20). This module uses a crystal in the 50 to 55 MHz region. A quadrupler provides drive to the 217 MHz bandpass filter. The output of this filter is applied to a doubler, a 435 MHz bandpass filter, another doubler, and finally an 870 MHz bandpass filter. The output of this final filter is in the 3 to 5 milliwatt range at an impedance of 50Ω.

6.2.5 74 - 10.7 MHz Converter

The 74 MHz output from the balanced mixer is applied to an integrated-circuit second mixer (see Figure 21) for conversion to 10.7 MHz. Oscillator injection is provided by a crystal oscillator contained within the same module. This oscillator operates at a fixed frequency of 63.3 MHz. The desired 10.7 MHz output from the mixer is extracted by an L-C bandpass filter which is responsible for the basic selectivity of the receiver. The output impedance of this converter module is 50Ω.

6.2.6 FM Demodulator and Meter Amplifier

Due to the requirements of this circuit, it is not recommended that the detector be adjusted in the field. Field adjustments without the aid of a low-distortion FM signal generator and distortion analyzer is difficult. Transformer T1 should only be adjusted using a non-metallic tuning tool. Adjust T1 pink and blue slugs for maximum AF output from terminal 3 (AF) when observed on an oscilloscope. Adjust T1 blue slug for minimum distortion from terminal 3 (AF) when observed on a distortion analyzer.

6.2.7 Metering and Muting

The baseband output from the FM demodulator is applied to a metering and muting module (see Figure 23). This assembly contains a peak-reading voltmeter which can be selected to read multiplex and program levels. It also contains a DC amplifier to operate an all-electronic muting system as well as a relay. The contacts from the relay are brought out to the rear of the receiver for alarm or fail-safe purposes. The output of the muting system is applied to the program and multiplex amplifier.

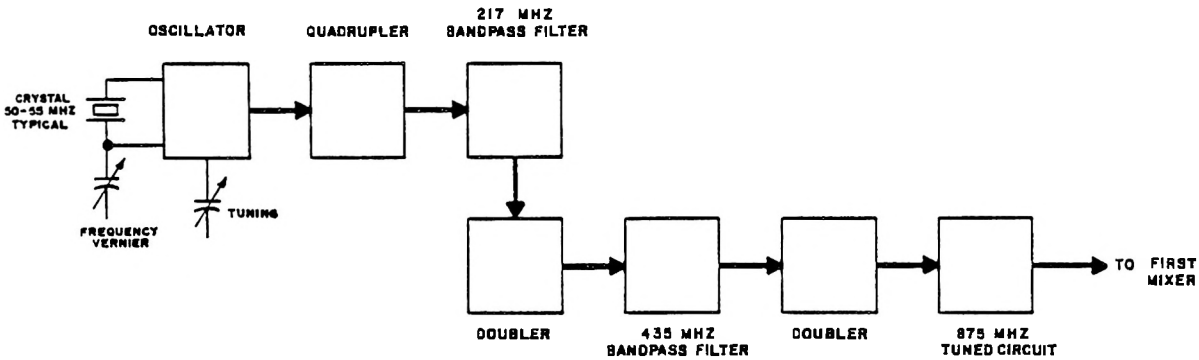

PCL-505 1ST LOCAL OSCILLATOR

(890-960 MHZ MONAURAL OR COMPOSITE)

FIGURE 20

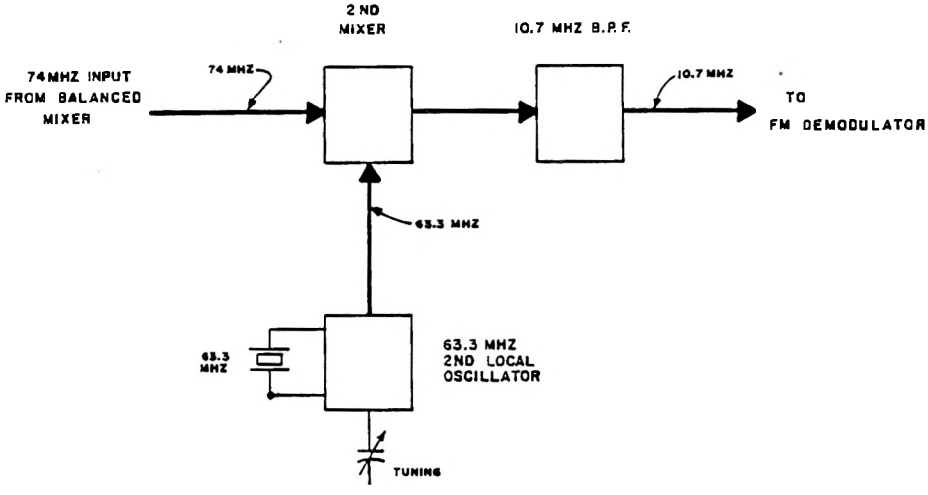

PCL-505 74-10.7 MHZ CONVERTER
(MONAURAL OR COMPOSITE)

FIGURE 21

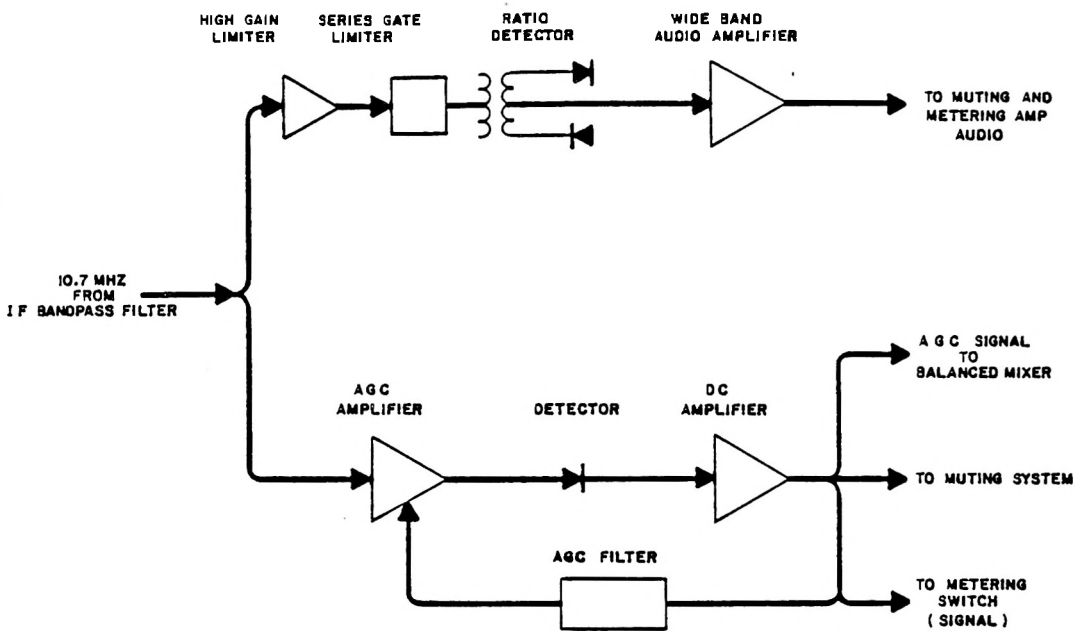

PCL-505 DEMODULATOR AND METER AMPLIFIER

(MONAURAL OR COMPOSITE)

FIGURE 22

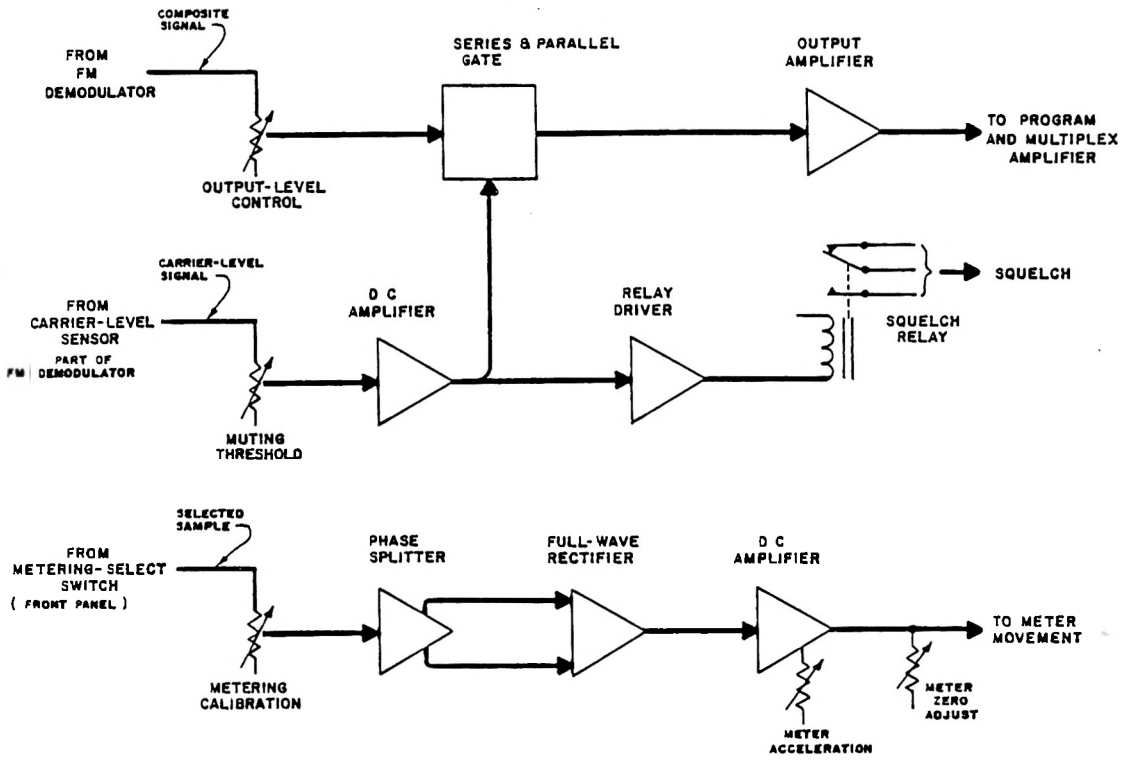

PCL-505 MUTING AND METERING AMPS

(MONAURAL OR COMPOSITE)

FIGURE 23

6.2.8 Program Amplifier

The monaural version of the program amplifier (shown in Figure 24) as used in the PCL-505 contains a 16 kHz low-pass filter whose purpose is to reject subcarriers above 22 kHz. Following this low-pass filter is an output amplifier with adjustable de-emphasis and automatic noise reduction. The de-emphasis adjustments allow the system frequency response to be tailored for extreme flatness. The automatic noise reduction circuit enhances the apparent signal-to-noise ratio, especially over extremely long paths or paths subject to moderate fading. It has no audible effect on the programming and is switch-defeatable. Note that all specifications for the PCL-505 are with this circuit defeated (disabled).

The program and multiplex amplifier assembly also contains a 22 kHz high-pass filter to reject program material below 16 kHz while passing subcarriers above 22 kHz. Following this high-pass filter is an adjustable-gain amplifier, an 85 kHz low-pass filter (to eliminate extremely high-frequency noise from the multiplex output), and an output buffer amplifier. The output of this buffer is applied to the output Type BNC connectors.

The composite version of the program amplifier (see Figure 25) as used in the PCL-505 contains special circuitry for processing the complete stereophonic signal. The first stage is a preamplifier with adjustable high-frequency boost. This stage compensates for the slight baseband response rolloff caused by the selectivity of the I.F. system. This set of equalizers compensates for system envelope delay distortion.

Following the delay equalizer system is the subcarrier-removing low-pass filter. After the filter is an amplifier with adjustable low-frequency phase correction. This stage allows compensation of low-end system phase errors. It drives the output amplifier whose output is applied to the output Type BNC connector.

The program and multiplex amplifier also contains a 100 kHz high-pass filter which removes stereophonic and 67 kHz SCA material from the multiplex output. Following the high-pass filter is an adjustable gain amplifier, a 240 kHz low-pass filter, and a multiplex output buffer amplifier. The output of this buffer is applied to the output Type BNC connectors.

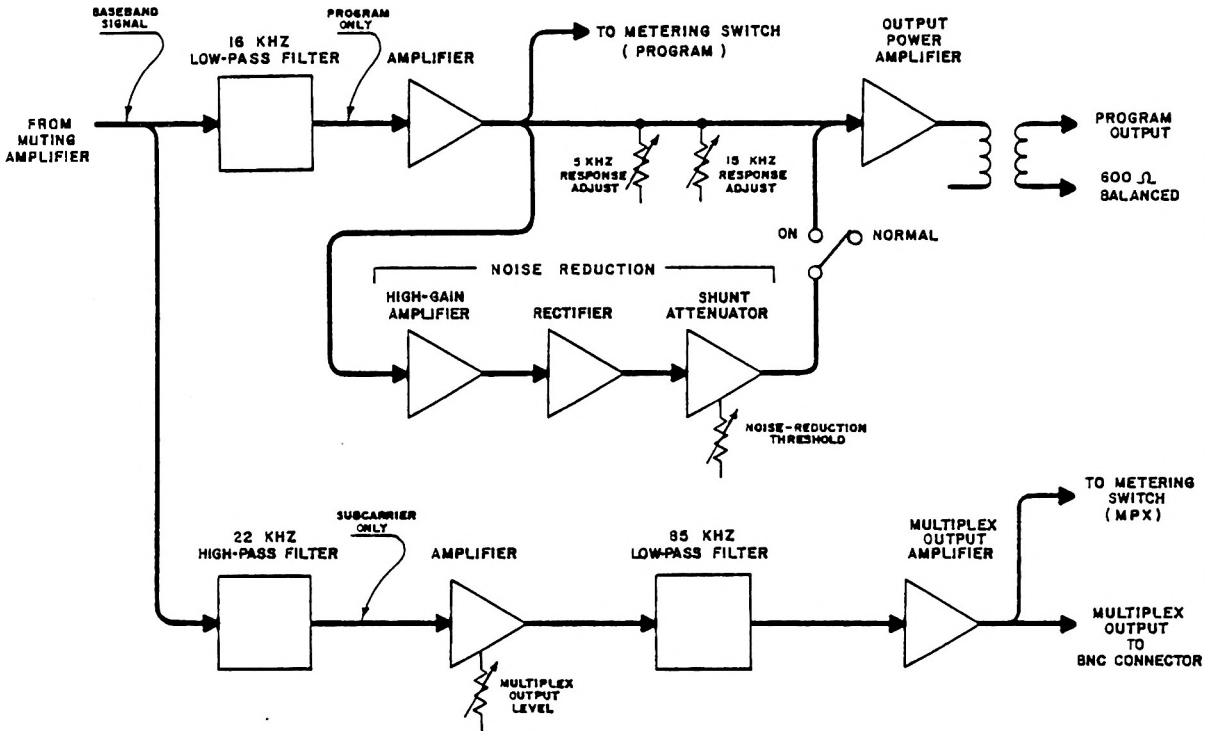

PCL-505 PROGRAM AND MULTIPLEX AMPLIFIER

(MONAURAL)

FIGURE 24

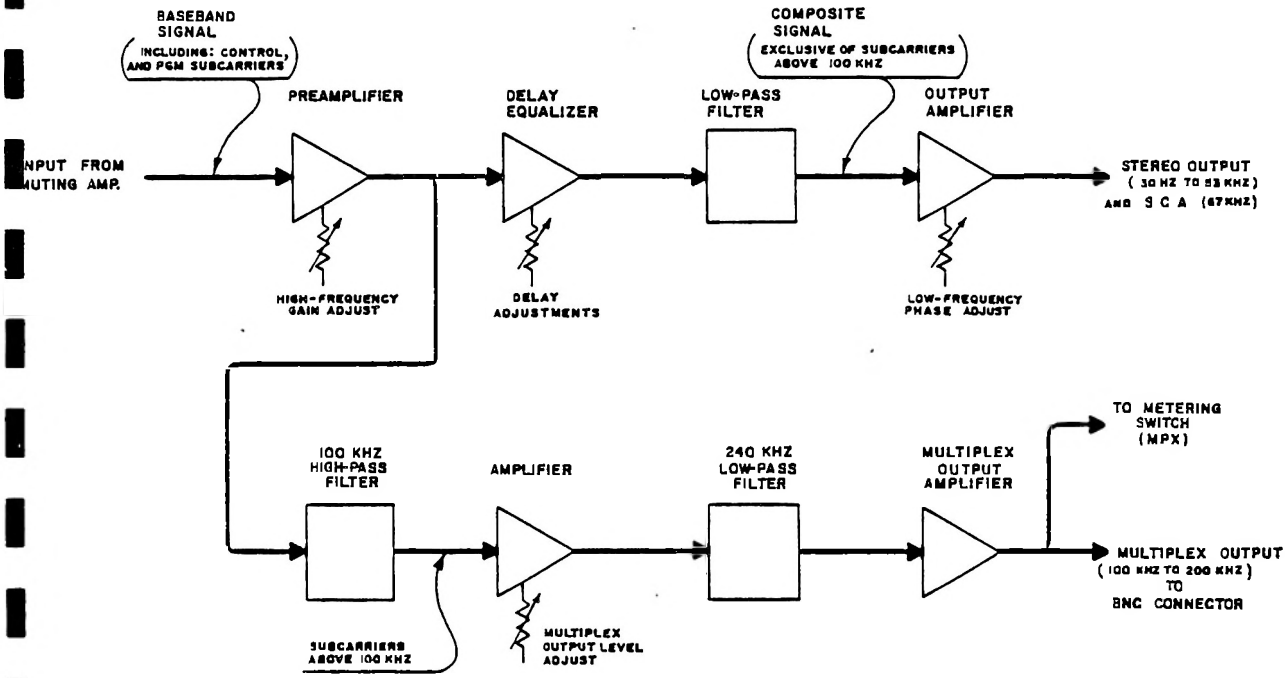

PCL-505/C PROGRAM AND MULTIPLEX AMPLIFIER
(COMPOSITE)

FIGURE 25

7. OPERATIONAL SUGGESTIONS

7.1 Recommended Standards and Data

Monaural--PCL-505:

Program Level	+10 dBm (sinusoid) 0 VU (complex) Note: these are low-frequency values, to be reduced as the audio frequency is raised.
Program Impedance	600Ω, resistive, floating, balanced
Control Subcarrier Frequency	26 kHz
Control Subcarrier Level	Approximately 1.5 V P-P
Program Subcarrier Frequency	67 kHz
Program Subcarrier Level	Approximately 1.5 V P-P

Dual Monaural (for stereo):

Program	See Monaural, above
Control Subcarrier Frequency	26 kHz
Control Subcarrier Level	Approximately 1.5 V P-P
Control Subcarrier Link #	1
Program Subcarrier Frequency	67 kHz
Program Subcarrier Level	Approximately 1.5 V P-P
Program Subcarrier Link #	2

Composite--PCL-505/C (single-link stereo):

Program Level	3.5 V P-P Note: this signal, which is the composite stereophonic waveform, should be measured only with a wide-band oscilloscope
Program Impedance	Approx. 10KΩ (transmitter) Approx. 1KΩ (receiver)
Control Subcarrier Frequency	110 kHz
Control Subcarrier Level	Approximately 1.5 V P-P
Program Subcarrier Frequency	185 kHz
Program Subcarrier Level	Approximately 1.5 V P-P

7.2 Program Levels

The normal level required for full modulation of a PCL-505 monaural transmitter (or for each transmitter in a dual system) is +10 dBm. This is the level normally required for full modulation using a sine wave at low audio frequencies. Complex waves, such as speech and music, will indicate much lower on an ordinary effective or RMS meter such as the VU-type. Furthermore, the level required for full modulation decreases as the audio frequency rises. This is due to the pre-emphasis circuitry in the transmitter.

> NOTE: THE ACTUAL MODULATION OF THE STL TRANSMITTER IS INDICATED BY THE FRONT PANEL METER. THIS METER IS FULL-WAVE PEAK-SENSITIVE, AND IS LOCATED AFTER THE PRE-EMPHASIS CIRCUITRY.

The modulation of the STL transmitter should be controlled by a limiter, preferably one of the frequency-conscious types. This limiter may be preceeded by an audio AGC system at the discretion of the individual station. The recommended method of adjustment of this chain of equipment is as follows:

a) Adjust the AGC input level controls. This is best done by using some form of actual program material. Adjust the control until the AGC unit is operating in the middle of its intended range.

   In stereo systems, adjust both of the AGC input level controls until the AGC units are operating in the middle of their intended range without any stereo interconnection. It would be best to use actual program material, and preferably a source which is balanced level-wise or else a monaural source with identical material in each channel. After the input level controls have been adjusted, reapply the stereo interconnection.

b) The remaining adjustments will all be made using a steady 400 Hz sine wave for the test material. It is assumed that the output of the AGC unit is connected to the limiter, and the limiter output is connected to the PCL-505 program input. In stereo systems, two identical audio chains will be involved.

c) Adjust the output of the AGC unit to some standard level. Using the test tone, set the AGC output level to +10 dBm.

For stereo systems, adjust both AGC unit outputs to the same level.

d) Adjust the limiter input control. Using the test tone, adjust the limiter input control for a satisfactory degree of limiting as read on the limiter panel meter.

In stereo systems, adjust both of the limiter input level controls until the limiters are operating with the desired degree of limiting without the stereo interconnection. The limiting activity may be read on the limiter panel meters. After the limiter input level controls have been adjusted, reapply the stereo interconnection.

e) Adjust the limiter output level control. Adjust the control for an indication of "0" on the PCL-505 panel meter in the program position.

In stereo systems, adjust each limiter output level for a reading of "0" on the corresponding STL program level meter.

f) In composite systems where the stereo generator (such as the Moseley Associates SCG-9) is located at the studio, the limiter outputs are set in a slightly different manner. Disable the audio input to one of the limiters. Then set the output level of the remaining limiter for an indication of "0" on the stereo generator output meter. This sets the level for one channel. Now follow the same process for the other channel.

7.3 Subcarrier Levels

In STL subcarrier systems, control or program signals are generated at the control point or studio. The subcarriers, in turn, are applied to the STL transmitter. The modulation of the

subcarrier by the control tone or program is commonly called "deviation" of the subcarrier. The modulation of the STL by the subcarrier is commonly termed "injection" of the subcarrier onto the link. The PCL-505 is designed for subcarrier injections of 10% to It will be found that the control systems need less than the program systems; the program systems are more demanding, particularly in the area of signal-to-noise ratio. The panel meter on the PCL-505 is factory calibrated to read percent injection on the lower scale when the MPX push button on the front panel is depressed. This should be coincident with a subcarrier input to the multiplex connector of about 1.5 volts peak-to-peak. At the same time, the PCL-505 receiver should deliver about the same output.

Filters in the PCL-505 are used to separate the program and subcarrier signals. For this reason, be sure to use a subcarrier in an appropriate frequency region when testing is performed. Monaural links will pass subcarriers in the 22 kHz to 85 kHz region, while the composite links are designed to pass 100 kHz to 240 kHz. Subcarrier frequencies above 185 kHz are not recommended for systems operating under FCC regulations.

7.4 Proof of Performance--PCL-505

There are three primary areas to be considered in measuring the performance of the STL:

1. Frequency response
2. Distortion
3. Signal-to-Noise ratio

Other items to be considered are cross talk into subcarriers (if used), transmitter power output, and receiver sensitivity. In addition, the composite PCL-505/C must be tested in a manner to insure passage of the stereophonic waveform. The requirements for the PCL-505/C are noticeably different from those of the monaural PCL-505, and will be covered separately.

Presented here are suggestions for proving the performance of the PCL-505. In this discussion, only the link will be considered; preceeding and subsequent apparatus (excepting test equipment) will be left out of these suggested procedures.

In measuring the frequency response of the STL, it should be remembered that pre- and de-emphasis are incorporated into the link to enhance the signal-to-noise ratio. Because of this, the STL cannot be truly considered as a "piece of wire." The transmitter modulator and the receiver demodulator have limited signal handling capability. Taken as a system, the link will display the following characteristics:

a) At low modulating levels (as for example 20 dB below normal) the frequency response of the system and the receiver output capability will both be flat.

b) At higher modulating levels the audio distortion will increase somewhat, due primarily to the selectivity in the receiver.

c) At still higher modulating levels the audio may actually be clipped, due primarily to overload in the transmitter or receiver audio processing circuitry. In addition, the receiver output level will fall off. The receiver program output level capability is similar to the de-emphasis curve used in the receiver.

These points should be kept in mind when running a proof of performance. If it is observed at any time that either the STL transmitter or the STL receiver program-level metering is indicating beyond the "0" mark, then the modulation level must be reduced by reducing the input to the STL transmitter.

It is undesirable to constantly change the level of an audio generator when running tests. To keep the modulation constant, a de-emphasis network may be connected between the audio generator and the STL transmitter. Such a network will automatically reduce the audio level as the frequency is raised. However, the receiver output level will fall off as the audio frequency is increased, and a comparison with a de-emphasis chart will be required to enable a system response measurement.

A simpler and more commonly used method of testing the frequency response of the STL is to merely reduce the audio level by several dB (deliberately undermodulate) and then make

the assumption that the link is a "piece of wire." This assumption cannot be made at full modulation levels. It is suggested that the audio level be reduced 20 dB for frequency response measurements. It will be found that this expedites frequency response measurement.

Distortion measurements should always be made at full modulation. Regardless of the audio frequency being used, deviate the transmitter fully (to the "0" mark on the transmitter modulation meter). Notice that when this is done that output level from the receiver will be lower at the higher modulating frequencies. For this reason, the distortion meter must have its input level control reset at each audio test frequency.

The signal-to-noise ratio is very simple to measure, but a few pitfalls may obscure the true reading. Establish a reference level in the system by modulating the transmitter with a test tone in the low-audio-frequency region, such as 400 Hz. Observe that the level required will be about +10 dBm, and more importantly, that the STL receiver output level will be at +10 dBm. When this test tone is removed, the remaining signal observed at the receiver output will be noise.

It has been observed that the residual noise output from the STL is sometimes masked by locally-generated interference (such as an AM broadcast transmitter in the vicinity of the test equipment) or by a ground loop, typically in the STL receiver/test equipment combination. It is sometimes helpful to ground the "low" side of the test equipment at one or both sites if the noise is observed to be power line related hum.

AM broadcast interference is best reduced by filtering particularly by using bypass capacitors across the program lines or between these lines and chassis ground.

If the noise is observed to be high-frequency hiss, it is probable that the receiver is receiving an inadequate signal. A review of the antenna installation and/or path engineering would probably be in order.

7.5 Proof of Performance--PCL-505/C

The basic requirements for the PCL-505/C composite STL are similar in nature to those for the PCL-505 monaural STL, but certain additional tests must be made. These extra tests are due to the more severe requirements placed on the STL in order that it may handle the composite stereo waveform with minimal degradation.

Although frequency response and distortion tests can be made on the STL as such, they will be found to be relatively immaterial with regard to its intended purpose of passing stereo. Typically, the figures obtained by such simple tests will be good enough to tax the test equipment; only an actual stereo signal of proven integrity will truly prove the capability of the link.

The equivalent of the monaural STL frequency-response test is the stereo STL separation test. In order for the stereo signal to easily pass the stereo technical standards, the frequency response of the composite STL must be flat within about 0.2 dB from 30 Hz to 53 kHz; at the same time the time delay must be constant within about one-half microsecond. This is no simple task and is the reason for the equalizing circuitry in the PCL-505/C receiver.

Separation in the PCL-505/C is best measured by using an actual stereo generator of known good performance for a test signal. Apply an audio test tone to one channel of the generator at the normal level and observe the composite (wide-band) output from the PCL-505/C receiver, using a stereo monitor. For modulating frequencies from 30 Hz to 15 kHz the separation should easily comply with accepted stereophonic standards, providing the stereo generator used meets these standards. The separation right to left and left to right should be similar.

Note that this test requires a monitor which can read a baseband signal. If no such monitor is available, then the transmitter's exciter will have to be added onto the chain of equipment under test.

Distortion in the PCL-505/C is best tested by monitoring the cross talk generated in a stereo signal. Cross talk, as the term

is used in stereophonic broadcasting, measures unwanted frequencies in the L-R subcarrier channel (23 kHz to 53 kHz) which result from desired signals in the L+R channel (50 Hz to 15 kHz) as well as those frequencies appearing in the L+R channel caused by modulation in the L-R channel. While not generally recognized, cross talk is caused by both linear (vector) and nonlinear distortions in the system. As linear (vector) distortion is introduced only by phasing errors in the L and R audio channels prior to matrixing, the PCL-505/C cannot modify or alter these products. Nonlinear distortion, i.e. harmonic distortion, in the PCL-505/C system can degrade the cross-talk performance. To measure cross talk, both audio channels in the stereo generator are fed with the same test tone, in parallel (in phase) such that the subchannel component is suppressed. Then the stereo monitor is switched to read the level of the subchannel component. For modulating frequencies from 50 Hz to 15 kHz the subchannel component must be suppressed more than 40 dB.

Note that when the monitor is switched to read the stereo subchannel, it is reading harmonics of the main channel, appearing in the 23 kHz to 53 kHz region. In addition, it is responding to any subchannel feedthrough from the stereo generator, a form of vector cross talk. The 38 kHz switching-signal may also be present.

For the second part of the cross talk test, the stereo generator audio channels are fed in opposition (out of phase) with the same test tone such that the main channel component is suppressed. Then the stereo monitor is switched to read the level of the main channel component. For modulating frequencies from 50 Hz to 15 kHz, the main channel component must be suppressed more than 40 dB. Note that when the monitor is switched to read the main channel that it is responding to intermodulation components originating within the L-R channel. In addition, it is responding to any main channel feedthrough from the stereo generator, a form of vector (or linear) cross talk.

The signal-to-noise ratio of the PCL-505/C may be measured using any of three different systems:

a) Measuring the signal-to-noise ratio of the wide-band output;

b) Measuring the signal-to-noise ratio of the wide-band output; with de-emphasis added to the measuring voltmeter;

c) Connecting the wide-band output to a stereo demodulator (monitor) and measuring the signal-to-noise ratio of a demodulated audio channel.

Of these three, it appears that the second method is the simplest to implement and yields consistent, meaningful results.

7.6 Cross Talk into Subcarriers

Cross talk into subcarriers may be tested by using a test tone on the program or main channel while measuring the signal-to-noise ratio of the demodulated subcarrier. For this test, be sure the subcarrier injection is correct. Then modulate the subcarrier generator with a low audio frequency such as 400 Hz. Measure the audio output from the subcarrier demodulator. This level will be the standard level. In the case of the Moseley Associates Model SCD-8, this should be +10 dBm. When the test tone is removed from the subcarrier generator, the residual signal from the subcarrier demodulator will be noise. When the main channel of the STL is modulated, it will generally be observed that this noise level will increase; the signal-to-noise ratio will decrease. Cross talk levels measured with steady state tones are usually higher than when measured with normal program content. Main channel to subcarrier cross talk measured during normal main channel programming is typically 50 dB below the standard level.

To measure subcarrier to main channel cross talk, apply the normally modulated subcarrier to the STL with no main channel program. Subcarrier signals appearing in the main channel output must be at least 60 dB below normal main channel program audio output.

7.7 Composite Receiver to Exciter Interface

The composite STL receiver output must be carefully connected to the wide-band input on the FM exciter. The interconnection must be made with shielded wire (small coaxial cable). Attenuation of the composite signal, if needed, should be done right at the exciter, preferably inside any shielded enclosure. A third point of which the installer should be aware is the possibility of a ground loop.

This will manifest itself as apparently unavoidable power line related hum. Either the receiver or the transmitter exciter may be operated from an isolation transformer should this occur. If this offers no relief, then an isolation transformer must be wide-band such as a 600Ω to 600Ω high-fidelity or a suitable telephone line repeat coil. Such a transformer should not be needed in exciters using a differential amplifier input stage.

7.8 Remote Control of the STL Transmitter

The PCL-505 transmitter has been designed to be operated by remote control. Radiate/standby control capability, as well as metering outputs for power and AFC, are built in.

Figure 26 shows the interconnections required for remote control of the transmitter. All connections to the transmitter are made via J1 on the rear of the unit. The interconnecting cable should have not more than a few thousand ohms resistance per conductor. The panel itself is shown schematically; this entire assembly is available from Moseley Associates as the Model ECP-5 Extension Control Panel.

The Radiate/Standby switch will place the transmitter in a radiating condition when closed. It is electrically interconnected with the control switch on the transmitter itself. The AFC and Output meters give relative indications of these two parameters. The two calibration potentiometers are set to give a suitable meter deflection, as for example, half-scale.

7.9 Adjustment Guides

Various adjustments have been provided in the PCL-505 to allow realistic manufacturing tolerances and to provide operational flexibility. The settings of these adjustments should not be altered unless it has been determined that an apparent problem will be resolved by resetting a specific control. The locations of adjustments, as well as related test points and plug-in components, are shown in the following series of adjustment guide drawings.

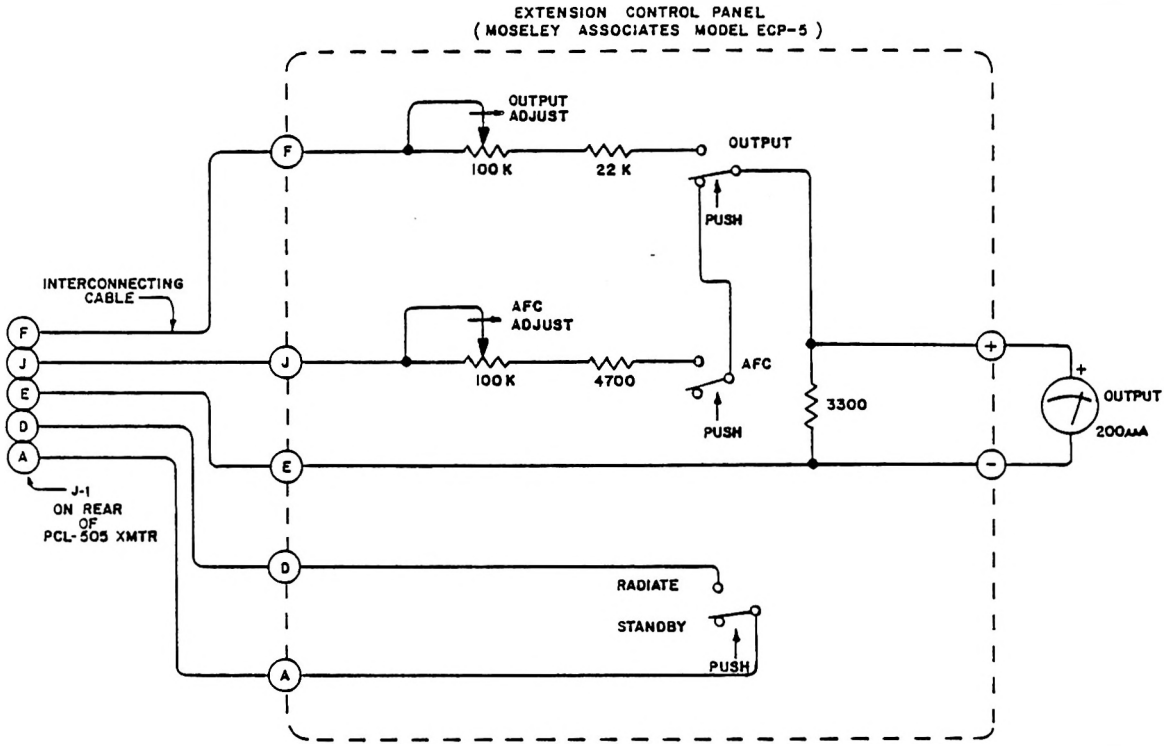

EXTENSION CONTROL PANEL CONNECTIONS

FIGURE 26

Should measuring equipment indicate that there is a problem in the system, and further should this trouble be positively traced to the PCL-505, then readjustment may be in order. In any case, controls should not be reset unless it is quite certain that a specific problem will be solved by a specific readjustment. A description of the various controls is given here to assist the operator with the proper test equipment to correct misadjustment. These controls are internal to the receiver and routine readjustment ("tweaking") is discouraged.

The following descriptions of the PCL-505 transmitter internal controls are with reference to drawing 21A2503 (for the composite, monaural, and dual versions).

+13.5V REGULATOR ADJUST - While monitoring the 13.5 volt line with an external voltmeter, set the +13.5V regulator adjustment control for a reading of +13.5 volts DC.

+VDC METER CALIB. - Depress the "+VDC" switch and adjust the +VDC METER CALIB. control for a front-panel meter reading of 13.5 on the lower scale.

OVEN TEMPERATURE ADJUST - This control allows adjustment of the proportional oven temperature. It is set for a reading of 3.7 to 4.3 volts DC at the oven heater pin 3, located inside the AFC subassembly, and chassis (chassis ground).

This reading should be taken after the temperature (and therefore the voltage has reached a stable value at room ambient. This will take about four or five minutes. If readjustment is necessary, it should be accomplished only in small increments with time given to allow restabilization.

AFC ADJUST (COURSE) - This control sets the free-running frequency of the modulated oscillator. The front-panel AFC ADJUST control should first be set to the middle of its range. While monitoring the AFC switch position, set the internal AFC ADJUST control slowly until "lock" is achieved as indicated by the meter going to the midscale position. Confirm AFC lock by operating the front-panel AFC ADJUST potentiometer and observing that the meter follows the rotation of the potentiometer. Return the potentiometer to the center of its range.

The following controls are all located in the Multiplier Module:

DOUBLER TUNING; TRIPLER TUNING; BUFFER TUNING; OUTPUT TUNING - These controls are all tuned by monitoring the IPA DRIVE meter position and tuning for maximum meter deflection.

The following controls are located within the Power Amplifier module:

Power Amplifer, the two DOUBLER INPUT TUNE controls are adjusted for approximately 0.5 VDC across R701. Adjust DOUBLER OUTPUT TUNE and DRIVER INPUT TUNE for 0.1 to 0.5 VDC across R702. This voltage is somewhat a function of the tuning of the following stage. Adjust FINAL OUTPUT TUNE and the two FINAL OUTPUT TUNE adjustments for maximum output as indicated on the front panel meter.

FORWARD POWER METER CALIB. - This control is set to read "0" dB when monitoring the FWD PWR meter position.

PROGRAM MODULATION SET - This control sets the deviation of the transmitter. For a composite system an input of 3.5 volts peak-to-peak is standard, and the deviation is 60 kHz peak. For a monaural or dual system the input is +10 dBm at a frequency of 1000 Hz, and the deviation is 40 kHz peak.

MUX 1 LEVEL SET - This control sets the deviation of the transmitter due to a subcarrier applied to the MUX INPUT #1. With a subcarrier of 1.5 volts peak-to-peak amplitude, the control is set for 15% injection (modulation). This will be 6 kHz for a monaural or dual system, or 9 kHz for a composite system.

MUX 2 LEVEL SET - As with the Mux 1 control, this adjustment sets the transmitter modulation for the MUX INPUT #2.

METER DC ZERO ADJUST - This control is used to electrically zero the panel meter deflection in either the PROGRAM or MPX positions. The meter's mechanical zero should be checked prior to adjustment of this control, which is set in the PROGRAM position without any program input.

MUX METER CALIB. - This control is set to produce a -3 dB deflection when program material sufficient to produce 100% modulation is applied to the transmitter.

METER ACCELERATION ADJUST - This control enables the panel meter to have the best possible response time in the PROGRAM and MPX positions. It is adjusted while rapidly varying the level of a test tone applied to the transmitter. Adjust for a 0.5 dB overshoot on the panel meter while monitoring a step going from no modulation to full modulation.

The following descriptions of the PCL-505 receiver internal controls are with reference to drawings 21A2501 (composite receiver) and 21A2502 (monaural or dual receiver).

+13.5V REGULATOR - While monitoring the 13.5 volt line with an external voltmeter, set the +13.5V REGULATOR control for a reading of +13.5 volts DC.

+VDC METER CALIB. - Depress the "+VDC" meter switch and adjust the +VDC METER CALIB. control for a front-panel meter reading of 13.5 on the lower scale.

1st L.O. FREQUENCY - This capacitor is adjusted to produce a second I.F. of 10.7 MHz when a carrier of the correct frequency is being received.

OSCILLATOR OUTPUT; QUADRUPLER OUTPUT; DOUBLER OUTPUT; OUTPUT TO MIXER - None of these controls should be adjusted unless a spectrum analyzer is available. If an analyzer is available, these controls may be adjusted for maximum output consistent with freedom from noise or spurious outputs. The minimum acceptable output level from this module is 4 milliwatts into a 50 ohm termination.

CONVERTER OSCILLATOR OUTPUT - This control is adjusted for maximum indication of received signal strength. On strong signals, the panel meter may show little change as this control is adjusted.

CONVERTER OSCILLATOR FREQUENCY - This control is adjusted for an oscillation frequency of 63.3 MHz. This control is only a vernier on the oscillator and may be left at midrange.

10.7 MHZ I.F. - These four controls affect the shape of the receiver selectivity curve. They are first adjusted by using a sweep generator and are slightly adjusted if required to minimize crosstalk into program subcarriers, if used. Should this readjustment be made, then the filter must be rechecked using the sweep generator.

74 MHZ FIRST I.F. - These controls should be adjusted only when a carrier-frequency sweep generator is available. They are adjusted for maximum output from the module when the local oscillator and carrier-frequency sweep generator are applied to the inputs. Should the controls be more than slightly off-resonance, or should the bandwidth be insufficient, then the possibility of oscillation exists. This will be revealed by examination with a spectrum analyzer. The correct bandwidth of this module is 4 MHz total width at the 2 dB point.

INPUT PRESELECTOR - These controls are adjusted for maximum indication of received signal strength. On strong signals the panel meter may show little change as these controls are adjusted.

DEMODULATOR - These controls T1 primary and T1 secondary are adjusted for maximum AF output from the demodulator output terminal (right-hand side, rear-most terminal). Then adjust the BLUE slug, T1 secondary, for minimum audio distortion.

MUTING THRESHOLD - This control is set to mute the receiver output when the carrier level is below 50 microvolts (-73 dBm).

OUTPUT AMPLITUDE - This control is used to adjust the receiver output signal amplitude. It is adjusted for an output amplitude of +10 dBm at low audio frequencies for monaural systems or 3.5 volts peak to peak for composite systems, at full modulation of the transmitter. See paragraph 6.2.6 before making adjustments.

PROGRAM METER ZERO - This control is used to electrically zero the panel-meter deflection in either the MUX or PROGRAM positions. The meter's mechanical zero should be checked prior to adjustment of this control, which is set in the program position when a quiet, unmodulated carrier is being received.

MUX METER CALIB. - This control is used to adjust the panel meter calibration when the MUX button is depressed. It is set to read -3 dB when a subcarrier modulates the system 15%. Prior to adjustment of this control, the transmitter modulation must be set and the receiver output amplitude control must be set.

PROGRAM METER CALIB. - This control is used to adjust the panel meter calibration when the PROGRAM button is depressed. It is set to read "0" dB when a test tone modulates the system fully. Prior to adjustment of this control, the MUX meter calibration must be correctly set.

PROGRAM METER ACCELERATION - This control enables the panel meter to have the best possible response time in the MUX and PROGRAM positions. It is adjusted while rapidly varying the level of a test tone applied to the transmitter. Adjust for 0.5 dB of overshoot on the panel meter while monitoring a step going from no modulation to full modulation.

MUX OUTPUT LEVEL - This control sets the level of the subcarrier(s) appearing at the multiplex output connectors. It is adjusted for a level of 1.5 volts peak to peak of subcarrier when that subcarrier modulates the transmitter 15%. The OUTPUT AMPLITUDE control must be set prior to setting the multiplex output level control.

The following three controls are peculiar to the composite version of the PCL-505:

H. F. GAIN - This control adjusts the frequency response of the composite STL, primarily in the 30 kHz to 50 kHz region. It is set to maximize stereo separation when a test tone of 1 kHz is applied to the stereo generator.

H.F. TILT - These controls affect the time response of the composite STL, primarily in the 50 kHz region. They are set to maximize stereo separation when a test tone of 15 kHz is applied to the stereo generator.

L.F. TILT - This control affects the frequency response of the composite STL, primarily in the 50 Hz region. It is set to maximize stereo separation when a test tone of 50 Hz is applied to the stereo generator.

The following three controls are peculiar to the monaural (or dual, for stereo) version of the PCL-505:

5 KHZ ADJUST - This control allows the frequency response of the system to be optimized in the 5 kHz region. It is adjusted for the same level from the program output of the receiver, when the test tone applied to the transmitter is switched back and forth between 500 Hz and 5,000 Hz. Be sure the modulation level never exceeds the "0" mark on the PROGRAM position of either the transmitter or receiver panel meters; it is advisable to run this test several dB below normal level.

15 KHZ ADJUST - This control allows the frequency response of the system to be optimized in the 15 kHz region. It is adjusted for the same level from the program output of the receiver when a test tone applied to the transmitter is switched back and forth between 1,500 Hz and 15,000 Hz. As with the 5 kHz adjustment, be sure the modulation level never exceeds the "0" mark.

NOISE REDUCTION - This control enables an enhancement of the measured signal-to-noise ratio of the signal as delivered from the program output of the PCL-505 receiver. It can be disabled by operating the noise-reduction switch to the Off position. The preferred method of adjustment is to adjust the received signal strength until the signal-to-noise ratio is 60 dB, and then adjust the noise reduction control for an enhancement of 8 dB to 10 dB.

FIELD CHANGES - For program inputs (ref. 91C6887) of less than 3.5V P-P into J4, change R201 according to the following;

Signal (V P-P)	R201 (K ohms)
0.5	0 (jumper wire)
1.0	1.6
1.5	3.3
2.0	4.7
2.5	6.8
3.0	8.2
3.5	10

Note: 1. $Zin = Rin + 1.7\,K\Omega$

2. $R201 = \frac{Ein - 0.5}{0.3}\,K\Omega$

The signal out of AUDIO OUTPUT J3 on the Receiver will still be 3.5V P-P for the correct input selected.

PARENT ITEM NO 9050337

SPARE PTS PCL-505CC 890-960MHZSP-38B F

DATE 4/22/81

MOSELEY ASSOCIATES INC
111 CASTILIAN DRIVE
GOLETA CA 93117
805 968-9621

COMPONENT ITEM NO.	STOCK LOCA	MANUFACTURER PART NUMBER	COMPONENT DESCRIPTION	QUANTITY PER	UM	UNIT SALES PRICE	TOTAL SALES PRICE
3390150	2722	MV-5254	LED GREEN	1	EA	1.37	1.37
3600145	2721	1N4154	DIO 1N4154 25V 4NS SI DO35	2	EA	.16	.32
3600160	2744	1N4731A	DIO Z1N4731A 4.3V 1W 5% AIAY	1	EA	1.26	1.26
3600178	2744	1N4733A	DIO Z1N4733A 5.1V 1W 5% AIAY	1	EA	1.09	1.09
3600186	2744	1N4734A	DIO Z1N4734A 5.6V 1W 5% AIAY	1	EA	1.26	1.26
3600236	2744	1N4745A	DIO Z1N4745A 16V 1W 5% AIAY	1	EA	.42	.42
3610003	2721	1002	DIO 1002 200V 1A SI DO39	4	EA	.39	1.56
3610045	2744	5082-2835	DIO 5082-2835 FAST	1	EA	2.24	2.24
3610094	2721	MDA-980-2	DIO MDA-980-2 100V BRIDGE 12A	1	EA	7.11	7.11
3610136	2744	MV-840	DIO VMV-840 030V 90-100PF DO7	1	EA	3.33	3.33
3630027	2721	2N2924LFS	XT NS2N2924LFS.2W160M025V.1A7P	2	EA	.54	1.08
3630035	2721	2N3053	XT NP2N3053 05W100M080V.7A	1	EA	1.47	1.47
3630043	2721	2N3054	XT NP2N3054 25W030K090V02A	1	EA	2.80	2.80
3630076	2744	2N3563	XT NS2N3563 .2W600M030V50M2P	1	EA	.49	.49
3630092	2744	2N3640	XT PS2N3640 .2W500M012V80M3.5P	1	EA	2.28	2.28
3630159	2744	2N3819	XT NF2N3819 .4W 025V20M	1	EA	.74	.74
3630167	2744	2N3820	XT PF2N3820 .4W 020V15M	1	EA	1.51	1.51
3630191	2744	2N4037	XT PP2N4037 01W060M060V01A	1	EA	1.54	1.54
3630209	2744	2N4058	XT PS2N4058 .4W 030V30M	1	EA	.46	.46
3630241	2744	2N4428	XT NP2N4428 3.5W750M055V.42A	1	EA	4.94	4.94
3630308	2721	2N5179	XT NS2N5179 .2W900M020V50M1P	1	EA	2.38	2.38
3630316	2744	2N5293	XT NP2N5293 36W800K080V04A	1	EA	1.73	1.73

PARENT ITEM NO 9050337

SPARE PTS PCL-505GC 890-960MHZSP-38B F

DATE 4/22/81

MOSELEY ASSOCIATES INC
111 CASTILIAN DRIVE
GOLETA CA 93117
805 968-9621

COMPONENT ITEM NO.	STOCK LOCA	MANUFACTURER PART NUMBER	COMPONENT DESCRIPTION	QUANTITY PER	UM	UNIT SALES PRICE	TOTAL SALES PRICE
3630399	2743	3N140	XT NF3N140 .4W 020V50M	1	EA	4.17	4.17
3640018	2744	A-400	XT NSA400 .2W0056015V25M	1	EA	6.62	6.62
3640109	2744	D1-12B	XT NPD1-12B 5.8W866M036V.25A	1	EA	21.18	21.18
3640133	2744	DM5-12B	XT NPDM5-12B 29W 036V02A	1	EA	49.70	49.70
3640141	2744	DM10-12B	XT NPDM10-12B 50W 036V04A	1	EA	71.05	71.05
3640182	2713	MJ-2955	XT PPMJ2955 115W2.5M060V15A	1	EA	2.52	2.52
3650116	2743	MC1723CL	RGLTR TYPE 1723 VARV .15A 632	2	EA	2.66	5.32
3660008	2812	SN72741P	IC UA741P OPAMP GEN COMP	1	EA	.83	.83
3660024	2743	SN72748P	IC UA748P OPAMP UNCOMP	1	EA	1.19	1.19
3660297	2743	SN7486N	IC SN7486N QU 2I EXCL OR	1	EA	1.02	1.02
3680170	2713	SCL4020AE	IC SCL4020AE 14 STAGE BIN CT	1	EA	3.50	3.50
3730173	2743	LM-318N	IC LM318N OPAMP HISPEED	1	EA	6.48	6.48
3730199	2743	LM-324N	IC LM324N OPAMP SNGL SUPL	1	EA	1.68	1.68
3730322	2743	MC1350P	IC MC1350P OPAMP	1	EA	2.63	2.63
3730348	2743	MC1355P	IC MC1355P AMP FM/IF	1	EA	3.85	3.85
3730389	2743	MC1590G	IC MC1590G AMP VIDEO	1	EA	16.28	16.28

TOTAL PRICE 239.40

PARENT ITEM NU 9050949

OPT S/P KIT PCL-505 890-960 SP-388 F DATE 4/22/81 PAGE 1

MOSELEY ASSOCIATES INC
111 CASTILIAN DRIVE
GOLETA CA 93117
805 968-9621

COMPONENT ITEM NO.	STOCK LOCA	MANUFACTURER PART NUMBER	COMPONENT DESCRIPTION	QUANTITY PER	UM	UNIT SALES PRICE	TOTAL SALES PRICE
3270113	2721	AZ-530-09-2	RELAY MIN PC 200OHM 12V NOM	1	EA	6.41	6.41
3370228	2735	MDL 1/4	FUSE	5	EA	1.53	7.65
3370269	2735	MDL 1 1/2	FUSE	5	EA	1.79	8.95
4090007	2024	A-20	XFMR	1	EA	53.74	53.74
4090015	2024	SAT-109	XFMR	1	EA	43.34	43.34
4090254	2022	3-1079B	XFMR 8-P-69B	1	EA	51.31	51.31
4090312	2024	3-1086	XFMR	1	EA	18.48	18.48
4260204	2731	TVA-1163	CAP HI-TEMP 1000/16V	1	EA	2.79	2.79
4270039	2723	360272G025AA2A	CAP PWR LYTIC 2700/25V	1	EA	5.81	5.81
4270088	2723	360X902G025AB2A	CAP PWR LYTIC 9000/25V	1	EA	7.98	7.98
9100033	2214	21A2493 B	XTAL OVEN MOD XMTR PCL-505	1	EA	35.00	35.00

TOTAL PRICE 241.46

PARENT ITEM NO 9051426

OPT S/P KIT PCL-505C 890-960 SP-38B F DATE 4/22/81 PAGE 1

MOSELEY ASSOCIATES INC
111 CASTILIAN DRIVE
GOLETA CA 93117
805 968-9621

COMPONENT ITEM NO.	STOCK LOCA	MANUFACTURER PART NUMBER	COMPONENT DESCRIPTION	QUANTITY PER	UM	UNIT SALES PRICE	TOTAL SALES PRICE
3270113	2721	AZ-530-09-2	RELAY MIN PC 200OHM 12V NOH	1	EA	6.41	6.41
3370228	2735	MDL 1/4	FUSE	5	EA	1.53	7.65
3370269	2735	MDL 1 1/2	FUSE	5	EA	1.79	8.95
4090254	2022	3-1079B	XFMR 8-P-69B	1	EA	51.31	51.31
4090312	2024	3-1086	XFMR	1	EA	18.48	18.48
4260204	2731	TVA-1163	CAP HI-TEMP 1000/16V	1	EA	2.79	2.79
4270039	2723	36D272G025AA2A	CAP PWR LYTIC 2700/25V	1	EA	5.81	5.81
4270088	2723	36DX902G025AB2A	CAP PWR LYTIC 9000/25V	1	EA	7.98	7.98
9100033	2214	21A2493 B	XTAL OVEN MOD XMTR PCL-505	1	EA	35.00	35.00

TOTAL PRICE 144.38

PARENT ITEM NO 9051228

OPT CRYS PCL-505CC @890-960MHZSP-38B F DATE 4/22/81 PAGE 1

MOSELEY ASSOCIATES INC
111 CASTILIAN DRIVE
GOLETA CA 93117
805 968-9621

COMPONENT ITEM NO.	STOCK LOCA	MANUFACTURER PART NUMBER		COMPONENT DESCRIPTION	QUANTITY PER	UM	UNIT SALES PRICE	TOTAL SALES PRICE
3340106	2734	30A0042	B	XTAL 63.3 MHZ PCL-505/PCL-101	1	EA	37.50	37.50
3340478	9600	30A0034	B	XTAL RX 890-960 MHZ PCL505/101	1	EA	37.50	37.50
3340486	9600	30A0035		XTAL TX 947-952 MHZ PCL-505	1	EA	37.50	37.50

TOTAL PRICE 112.50 *

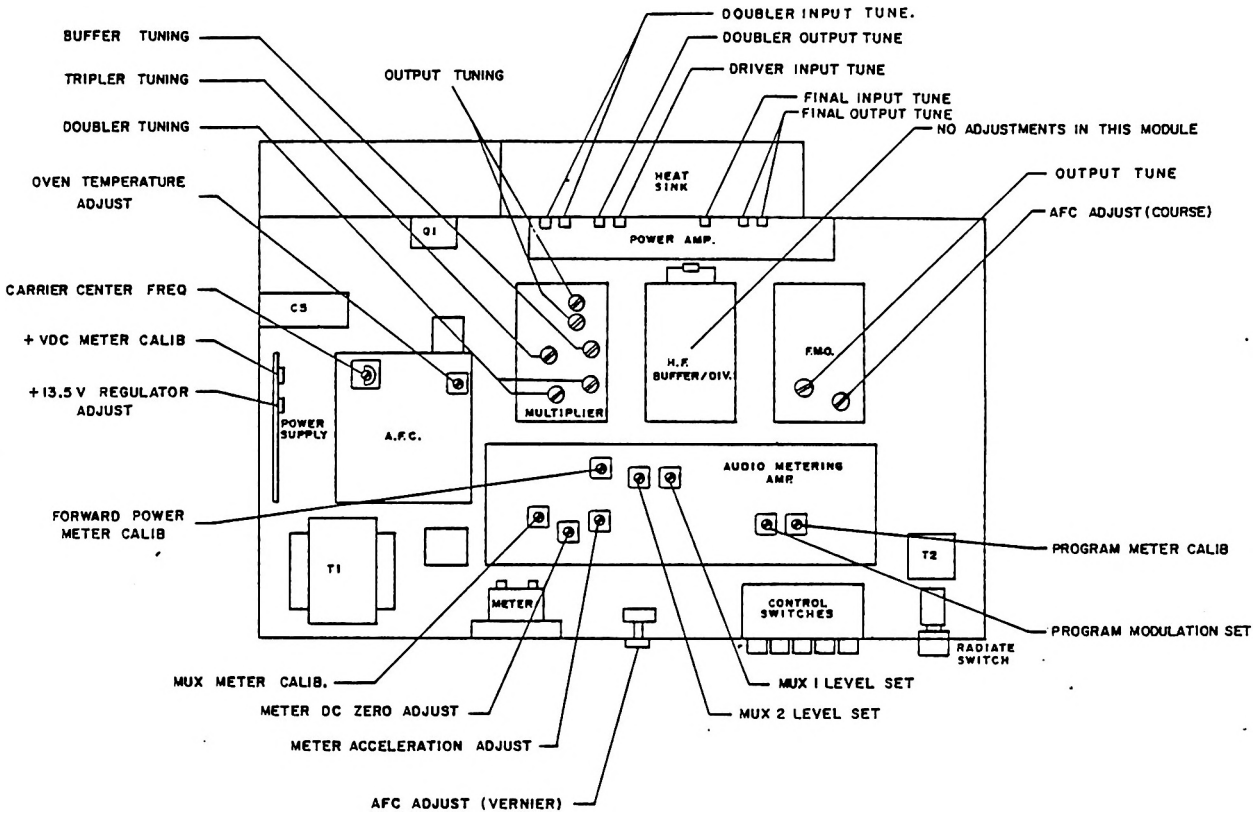

REV	REVISIONS	DATE	MGMT. APPR.
D	REVISED MODEL AMP & FMQ ADDED. ADDED BOX IDENTIFICATION & OCA.	28 MAR 78 F.X.Y.	
C	ADDED DETAIL TO DOUBLER INPUT TUNE.	5 APR 76	
B	REMOVE DOUBLER, REV MULT & REV RF AMP.	14 FEB 74 J.H.M.	
A			

MOSELEY ASSOCIATES, INC.
SANTA BARBARA RESEARCH PARK
GOLETA, CALIFORNIA 93017

PCL-505 TRANSMITTER
ADJUSTMENT LOCATIONS

TOL: FRACT. ± 1/32. .XX ± .030. .XXX ± .010. ∠ ± 1/2°

DWN	KF	3 APR 75	SCALE: NONE
CHK	F X Y	3 APR 75	21A 2503 D
ENG	[illegible]	4 APR 75	

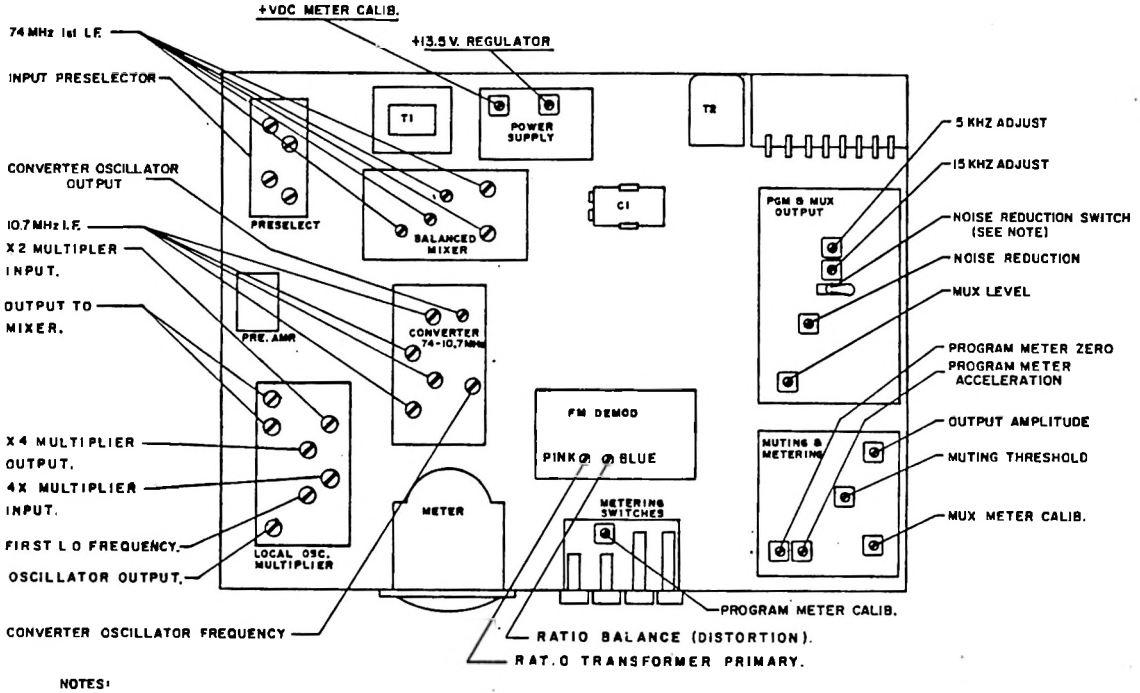

NOTES:

1. NORMAL = NO NOISE REDUCTION
   NOISE REDUCTION = NOISE REDUCTION CIRCUITRY ACTIVATED

D	ADDED MA IDENTIFICATION 28 MAR 75				
C	CHG LOCAL OSC. 6 APR 70	L.I.			
B	REV. INPUT PRESELECTOR ADJUST. LOCATION	2-14-76	JM		
A	REVD. ADJUSTMENT LOCATION 11-13-74	FMDEMOD	CAM		
REVISIONS		DATE	MGMT. APPR.		

MOSELEY ASSOCIATES, INC.
SANTA BARBARA RESEARCH PARK
GOLETA, CALIFORNIA 93017

PCL-505 MONAURAL RECEIVER
ADJUSTMENT LOCATIONS

TOL: FRACT. ± 1/32. .XX ± .030. .XXX ± .010. ∠ ± 1/2°

DWN	KF	26 MAR 75	SCALE: NONE
CHK	FXY	28 MAR 75	
ENG	H. Nam	28 Mar 75	21A2502 D

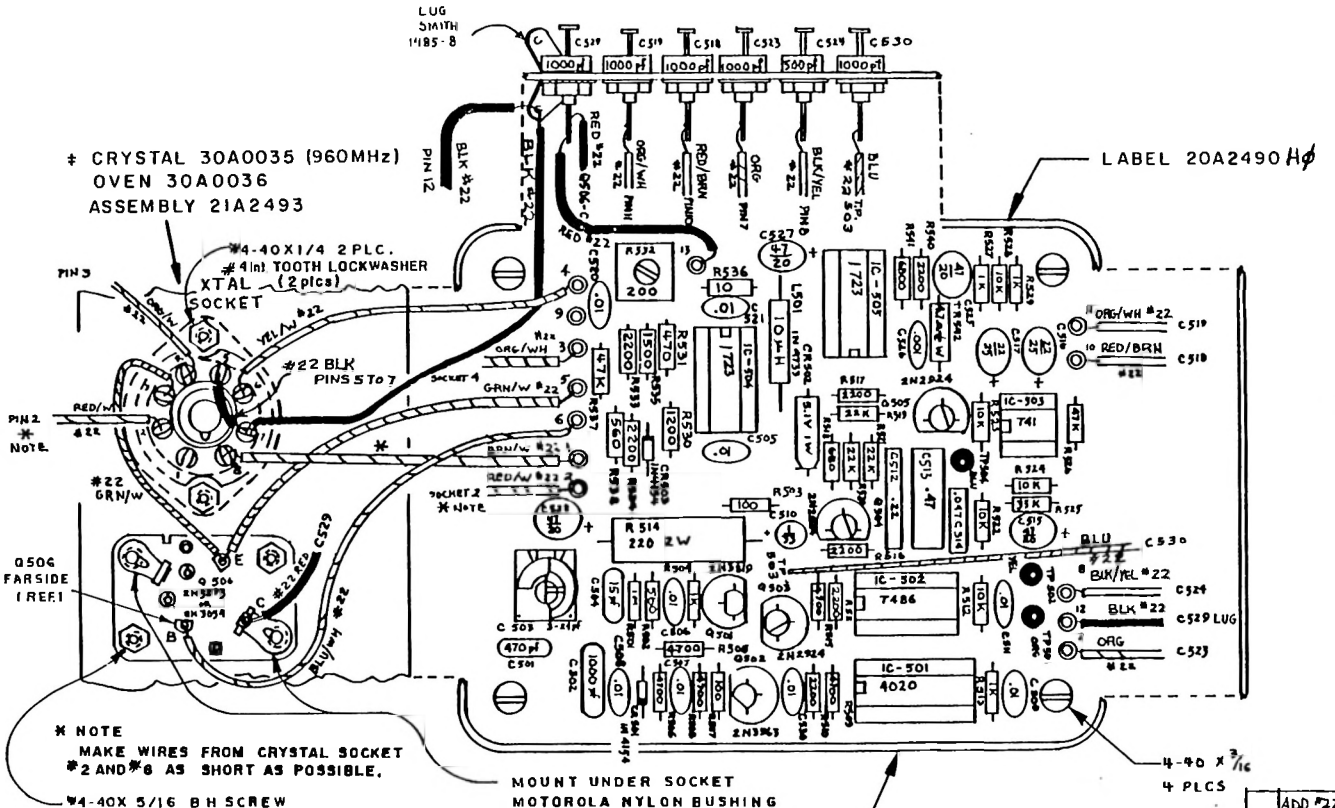

NOTES:

1. UNLESS OTHERWISE SPECIFIED
   RESISTOR VALUES ARE IN OHMS, 1/4 W, 10 %
   CAPACITOR VALUES ARE IN MICROFARADS.
2. P.C. BOARD 51A5598,
3. SCHEMATIC 91C6884, REV. C
4. * CRYSTAL IS 30A0045 FOR 450MHz
   " " 30A0049 " 220MHz
   " " 30A0054 " 150MHz
5. INSTALL SILICON PAD BETWEEN CASE AND TRANSISTOR Q506.

L	ADD #22 BLK WIRE TO SOCKET PINS: 5 TO 7 EC03593 123482 CH
K	IC 504 505 WAS 723 EC03521, 5-28-82

REVISED PER ECO 3090	S.WAN SOCKET W/ UNITED UNC & ADD LOCKWASHER TO HARDWARE	NOTE 5 ADDED. ECO1328 30 AUG 78 D.T.W.	F00251547F002 BUSHING ELIM'D 2 WAS OBS'ED 23 MARCH 78 L.J.	ADDED C530 & WIRE TO IC 15 SEPT 77 ECO 900 L.J.	ARTWORK REV'D. CHANGES PER ECO 868, 6 JAN 77 F.X.Y. ADD REFS. ECO 832	ADD * NOTE AND CHANGE POLARITY AT C516, C517 JAN 13 1977 F.X.Y.	R534 WAS 4700 Ω KF 25 MAR 75	REVISIONS	DATE	MGMT. APPR.
30	29	28	27	26	25	24	23				

MOBELEY ASSOCIATES, INC.
SANTA BARBARA RESEARCH PARK
GOLETA, CALIFORNIA 93017

COMPONENT LAYOUT
XMTR AFC

TOL: FRACT. ± 1/32, .XX ± .030, .XXX ± .010, ∠ ± 1/2°			
DWN	KF	10/10/74	SCALE: FULL
CHK	F X Y	26 DEC 74	20A2490 L
ENG			

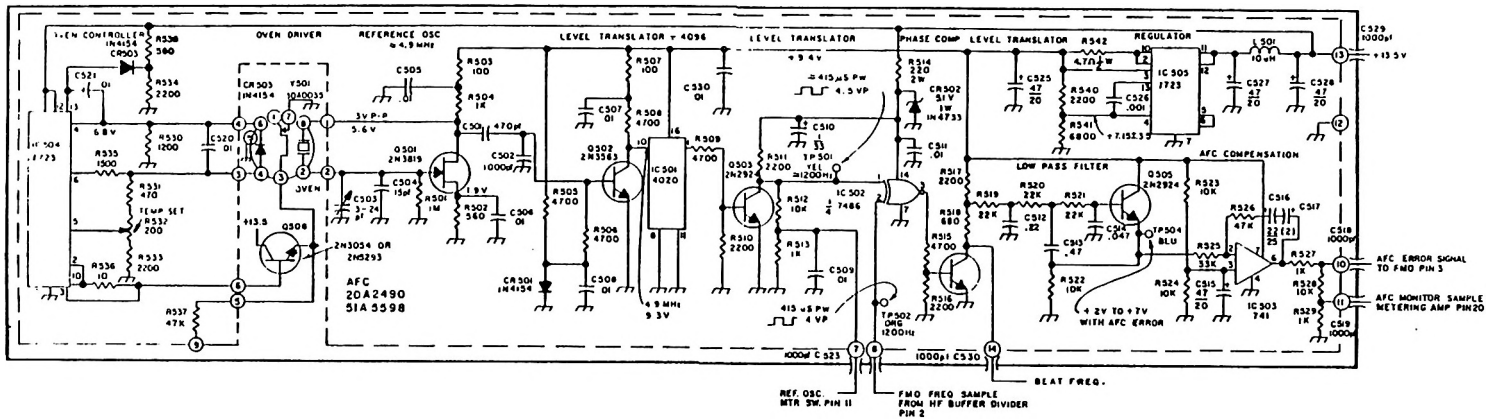

NOTES.

1 UNLESS OTHERWISE SPECIFIED
RESISTOR VALUES ARE IN OHMS 1/4W, 10%
CAPACITOR VALUES ARE IN MICROFARADS

2 H DENOTES SELECTED VALUE.

3. RF VOLTAGES MEASURED USING TEKTRONICS 581 SCOPE, WITH TYPE 82 PLUG-IN, AND NON COMPENSATED PROBE.

4 DC VOLTAGES TESTED WITH 10MEG INPUT DVM

5. VOLTAGES SHOULD BE WITHIN 20 % OF THAT SHOWN ON THE SCHEMATIC.

6. COMPONENT LAYOUT 20A2490

7. P.C. BOARD 51A5598

REV.	REVISIONS	DATE	SHMT. APPL.
E	GND PINS OF XTAL SOCKET. ECO5893 12 July 82 CH		
D	IC 504 & IC 505 WAS 723 ECO 3321, 5-28-82		
C	ADDED C530		
B	INSERT TYP CONN. ECO 89	19 SEPT 75	
A	ADD REWS ECO 831	16 AUG 76	

MOSELEY ASSOCIATES, INC.
SANTA BARBARA RESEARCH PARK
GOLETA, CALIFORNIA 93117

SCHEMATIC
XMTR AFC

TOL: FRACT. ± 1/32, .XX ± .030, .XXX ± .010, ∠ ± 1/2°

DWN	JUM	7 JAN 76	SCALE:
CHK	FXY	8 JAN 76	91 C 6884
ENG		9 Jan 76	

E

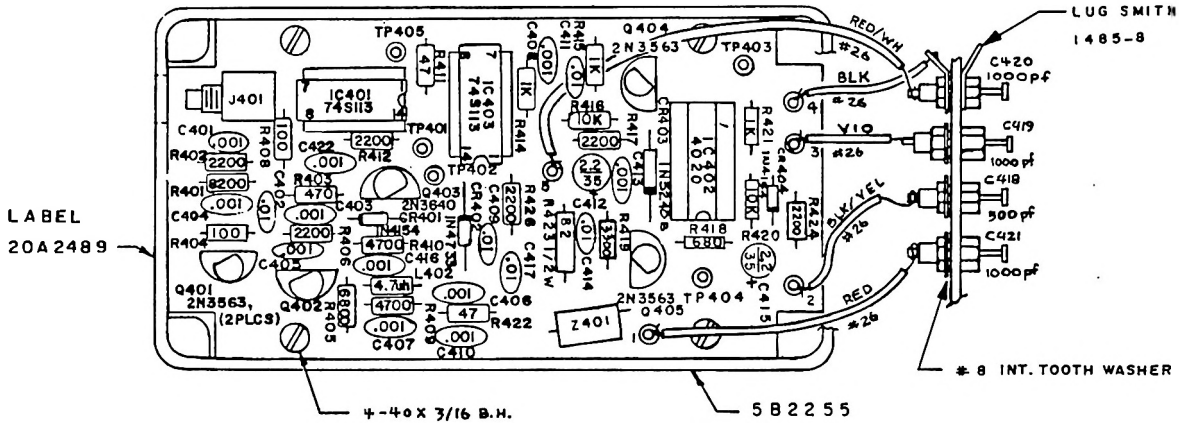

NOTES

1. UNLESS OTHERWISE SPECIFIED ALL RESISTOR VALUES ARE IN OHMS 1/4W, 10 % AND CAPACITOR VALUES ARE IN MICROFARADS

2. P.C. BOARD 51A5594.
3. SCHEMATIC 9186886

G1	CR403 WAS IN5518 PC03428 SAPR72 C.H.		
G	Q401 WAS 2N3536 6JULY77 JAK		
F	ARTWORK REV.04 CHANGED IC401, B2591, PER ECO 458 27JAN77 F.HAMDY		
E	LUG WAS NOT BLK WAS TEGA REMOVED WAS TEGAR 29MAR76 F.X.Y.		
D	MOVED C417, R424 AND R425 ADDED R426, R427 AND R428 ADDED 5B2255-28		
C	ADDED 5B2255-28 5A2327. 6APRIL75 L.I.		
B	ADD R425. REMOVE R413. 22MAR74 F.X.Y.		
A	ADD C420 & TERMINAL 5 MOVE R413 TO OUTSIDE K.F. 29JAN73		
	REVISIONS	DATE	
	MGMT. APPR.		

MOSELEY ASSOCIATES, INC.
SANTA BARBARA RESEARCH PARK
GOLETA, CALIFORNIA 93017

COMPONENT LAYOUT
XMTR H.F. BUFFER / DIVIDER.

TOL: FRACT. ± 1/32.	.XX ± .030.	.XXX ± .010.	∠ ± 1/2°
DWN	L.I.	8 OCT 74	SCALE: FULL
CHK	FXY	30 DEC 74	20A2489 G1
ENG	H. Hong	30 DEC 74	

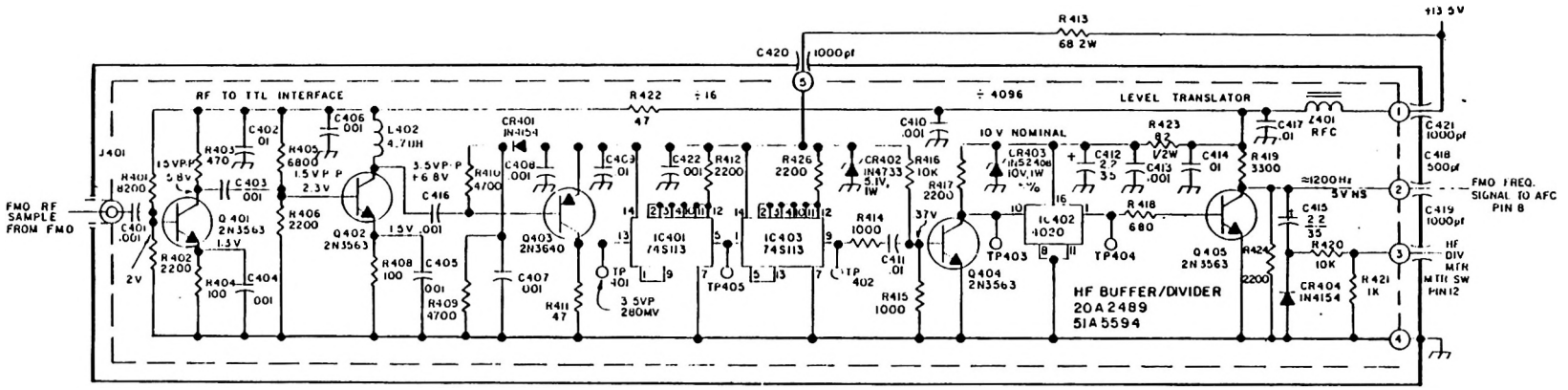

NOTES:

1. UNLESS OTHERWISE SPECIFIED RESISTOR VALUES ARE IN OHMS 1/4W, 10%. CAPACITOR VALUES ARE IN MICROFARADS
2. N DENOTES SELECTED VALUE.
3. RF VOLTAGES MEASURED USING TEKTRONICS 581 SCOPE, WITH TYPE 82 PLUG-IN, AND NON COMPENSATED PROBE.
4. DC VOLTAGES TESTED WITH 10MEG INPUT DVM
5. VOLTAGES SHOULD BE WITHIN 20% OF THAT SHOWN ON THE SCHEMATIC.
6. COMPONENT LAYOUT 20A2489
7. PC BOARD 51A5594

B1	CR403 WAS 1N3518 PC0 3428 SA PREC. C.N.				
B	LAYTON REV. OK. CHANGED 11 CAO. 0.0001, SEP. ECO 0.0				
A	INITIAL RELEASE PER ECO 861 PRINTS 7.27				
REVISIONS		REQ'D. APPR.	DATE		

MOSELEY ASSOCIATES, INC.
SANTA BARBARA RESEARCH PARK
GOLETA CALIFORNIA 93117

SCHEMATIC
XMTR HF BUFFER/DIVIDER BOARD

DWN	JLLM	7 JAN 76	SCALE
CHK	FXY	8 JAN 76	
ENG			91 B 6886

B1

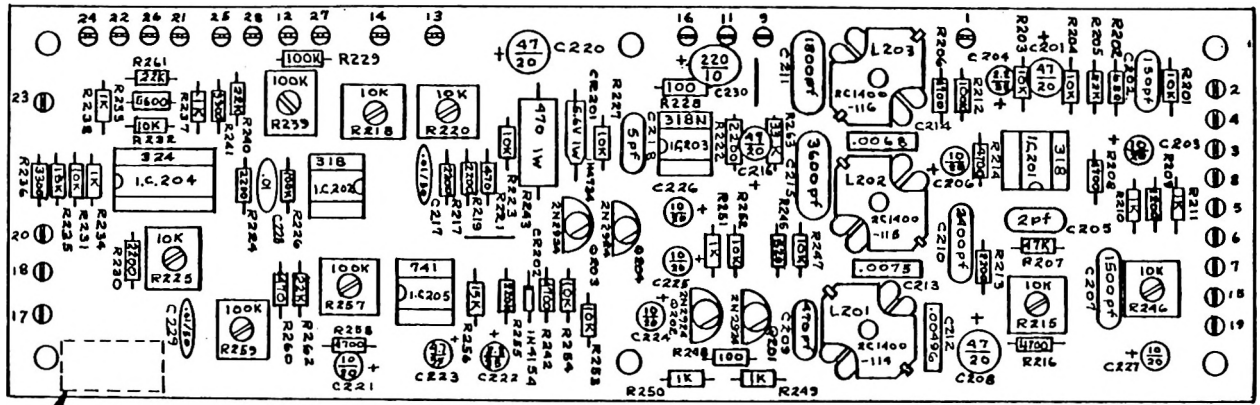

NOTES

1. UNLESS OTHERWISE SPECIFIED
   RESISTOR VALUES ARE IN OHMS 1/4 W 10 %
   CAPACITOR VALUES ARE IN MICROFARADS.
2. P.C. BOARD 51A5632
3. SCHEMATIC 91C6888

REVISIONS			
J	ADD LABEL LOCATION. ECO #13 JAN-77 F.X.Y.		
I	R224 WAS 180K. ECO #12 JAN-77 JM.		
H	IC201 WAS 748, & DELETED C219, R219, R220. ECO #10 JAN-77 GM		
G	ARTWORK REV. C. ADDED PADS FOR C230. 17-11-76 GM		
F	C202 WAS 470 PF. ECO #9 SEP-76 F.X.Y.		
E	C210 WAS 6800 PF. R223 WAS 470 OHMS. R224 WAS 180K. ECO #8 AUG-76 F.X.Y.		
D	IC203 WAS 748 P. CHG R205 & R221. DELETE R222 WAS 2200 OHMS. ECO #7 JUL-76 F.X.Y.		
C	R221 WAS 10K. ECO #6 JUN-76 F.X.Y.		
B	R224 WAS 15K. 19APR79 F.X.Y.		
A	R234 W/O LABEL, C223 W/O 2.2µF. C232 W/O R229, R16 W/O 8200. R/W WAS 2200. ADD 8.2K R/W. ADD ROOK # 427.2		
	SCHEMATIC AT ROOK # 427.2		
	DATE		
	REVISIONS		
	DRAWN. APP.		

MOSELEY ASSOCIATES, INC.
SANTA BARBARA RESEARCH PARK
GOLETA, CALIFORNIA 93017

COMPONENT LAYOUT
XMTR AUDIO/MTRG AMP(MONAURAL).

TOL: FRACT. ± 1/32, .XX ± .030, .XXX ± .010, ∠ ± 1/2°

DWN	L.I.	18DEC74	SCALE: FULL
CHK			20A2487 J
ENG	H. Hanin	1 JAN 75	

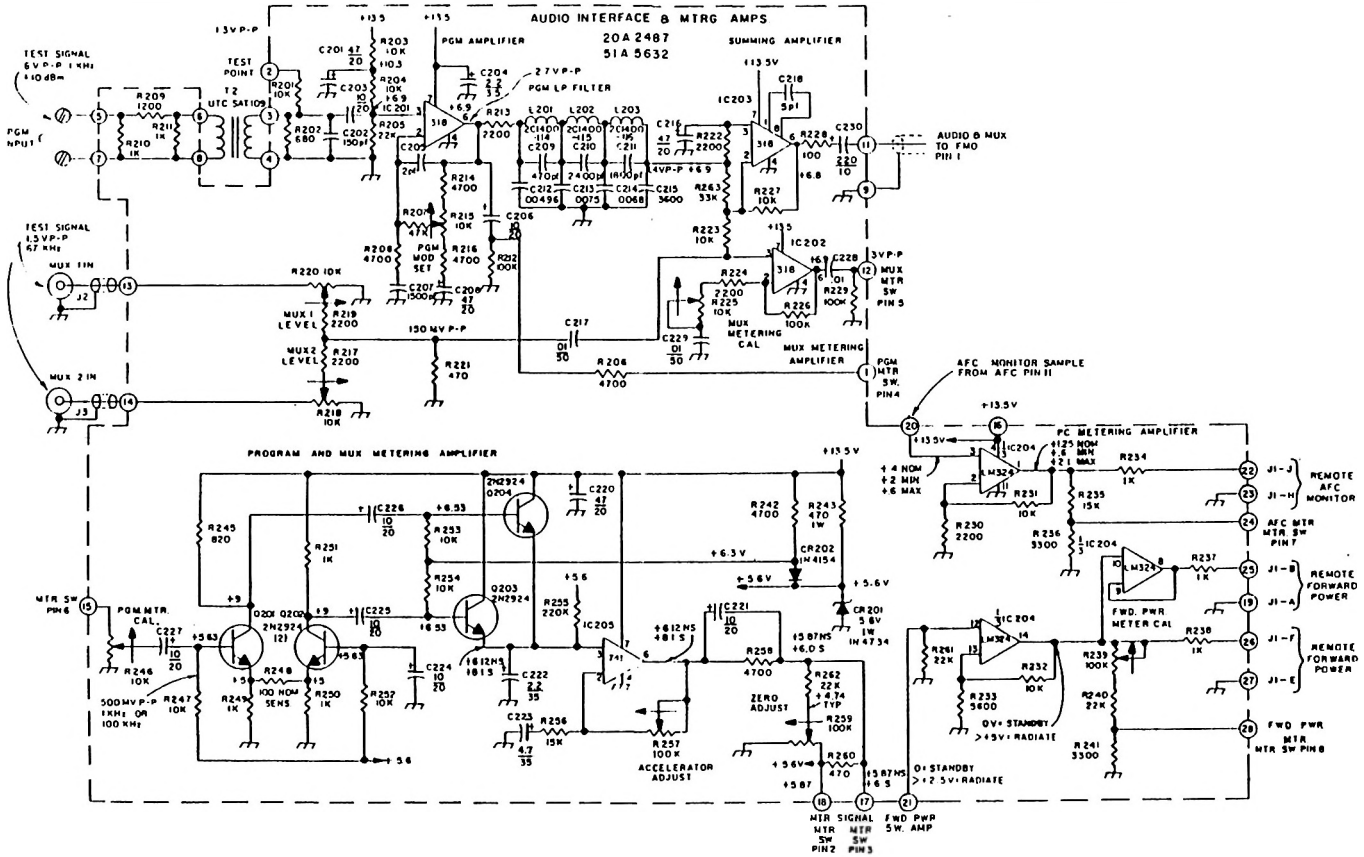

NOTES:

1. UNLESS OTHERWISE SPECIFIED RESISTOR VALUES ARE IN OHMS 1/4W, 10% CAPACITOR VALUES ARE IN MICROFARADS
2. * DENOTES SELECTED VALUE.
3. RF VOLTAGES MEASURED USING TEKTRONICS 581 SCOPE, WITH TYPE 82 PLUG-IN, AND NON COMPENSATED PROBE.
4. DC VOLTAGES TESTED WITH 10MEG INPUT DVM.
5. VOLTAGES SHOULD BE WITHIN 20% OF THAT SHOWN ON THE SCHEMATIC.
6. COMPONENT LAYOUT 20 A 2487
7. PC BOARD 51 A 5632

REVISIONS		DATE	MOMT. APPR.
B	R226 WAS 150K ECO 873 30 MARCH 77 JM		
A	ICEBOX WAS 748 & DELETED C215, 216 R220, 221 ECO. 802		

MOSELEY ASSOCIATES, INC.
SANTA BARBARA RESEARCH PARK
GOLETA, CALIFORNIA 93117

SCHEMATIC
XMTR AUDIO INTERFACE & MTR. AMP. (MONO)

TOL: FRACT ± 1/32, .XX ± .010, .XXX ± .010, ∠ ± 1/2°

DWN	JHM	7 JAN 76	SCALE:
CHK	F XY	8 JAN 76	91 C 6888 B
ENG	ICEBOX	9 JAN 76	

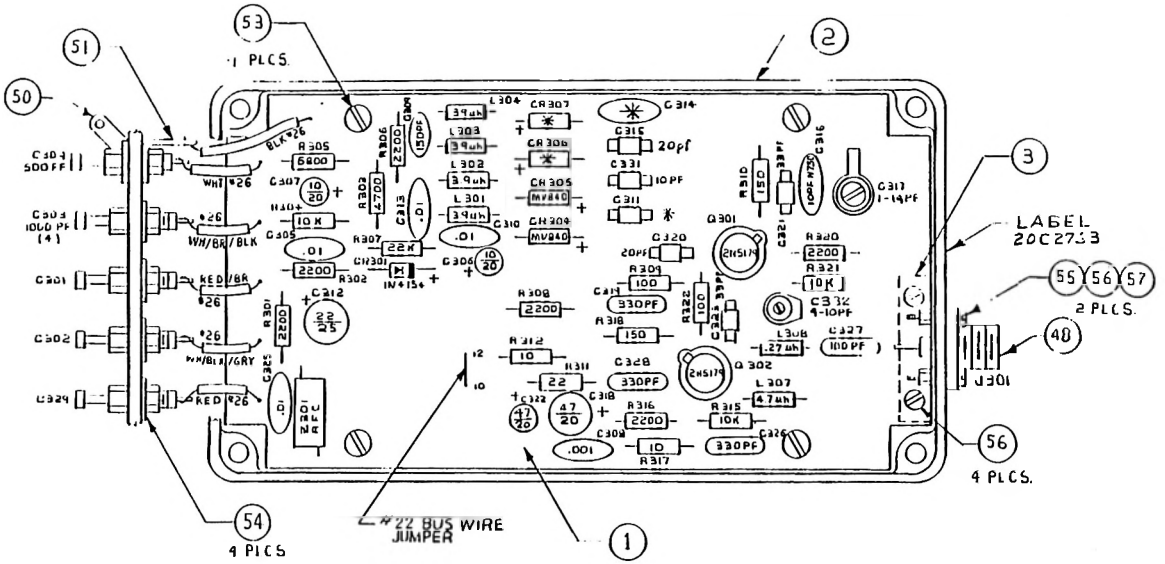

	CR306 *	CR307 *	C314 *	C311 *
ITEM 1 150/240/330 MHz	BB105A	BB105A	.001	20pf JFD
ITEM 2 450/960 MHz	MV840	MV840	10PF JFD	10pf JFD

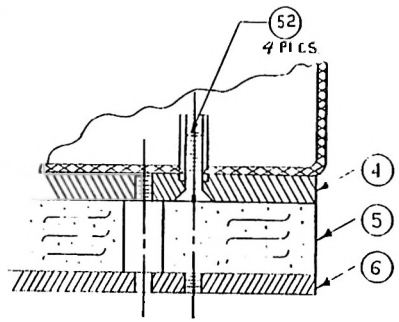

NOTES:

1. UNLESS OTHERWISE SPECIFIED
   RESISTOR VALUES ARE IN OHMS, 1/4W, 10%
   CAPACITOR VALUES ARE IN MICROFARADS.
2. PC BOARD 51B5814-12,-22
3. SCHEMATIC 41B7195 C/D
4. CUT LEADS OF 2N5179 TRANSISTORS TO .125"+0 -.015

ITEM	DESCRIPTION	REF. DES.	STOCK NO.	QTY	150/240/330 MHz	450/960 MHz
60						
59						
58						
57	HEX NUT	#3-48	1030055	2	2	
56	SCREW	#3-48 X 1/4 B.H.	1030022	6	6	
55	LOCKWASHER	#3 SPLIT RG.	1030089	2	2	
54	LOCKWASHER	#8 INT. TOOTH	1130293	4	4	
53	SCREW	#4-40 X 3/16 B.H.	1050103	4	4	
52	SCREW	#4-40 X 3/8 F.H.S.	1050112	4	4	
51	GROUND LUG	#8 INT. TOOTH	1130384	1	1	
ITEM	DESCRIPTION	REF. DES.	STOCK NO.	QTY		

ITEM	DESCRIPTION	REF. DES.	STOCK NO.	QTY	
48	CONNECTOR	J301	3030343	1	1
47	TRANSISTOR SOCKET	Q301, Q302	3250321	1	1
44	INDUCTOR	L307	4020228	1	1
43	INDUCTOR	L301-304	4020210	4	4
42	INDUCTOR	L308	4020137	1	1
41	DIODE	CR304-301	3610136	2	4
40	DIODE	CR306, 307	3610052	2	0
39	DIODE	CR301	3600145	1	1
38					
37	RESISTOR	R307	4410411	1	1
36	"	R321, R304, 315	4410379	3	3
35	"	R305	4410353	1	1
34	"	303	4410330	1	1
33	"	R301, 302, 306, 308, 316, 320	4410288	6	6
31	"	R310, R318	4410148	2	2
30	"	R309, R322	4410122	2	2
29	"	R311	4410049	1	1
28					
27	RESISTOR	R312, R317	4410023	2	2
26	VARIABLE CAP.	C317	4370219	1	1
25	CAPACITOR	C321, 323	4240057	2	2
24	"	C311, 315, 320	4240040	3	2
23	"	C311, 314, C331	4240024	1	3
22	VARIABLE CAP.	C332	4370300	1	1
20	"	C309	4310066	1	1
19	"	C316	4300059	1	1
18	"	C312	4280095	1	1
17	"	C322, C318	4280137	2	2
16	"	C306, C307	4280079	2	2
14	"	C311, 326, 328	4210415	3	3
13	"	C327	4210266	1	1
12	"	C305, 310, 313, 325	4310132	4	4
11	"	C308, C314	4310108	2	1
10	FEED-THRU CAP.	C301, 302, 303, 329	4350096	4	4
9	FEED-THRU CAP.	C304	4350088	1	1
8	R. F. CHOKE	Z301	4020368	1	1
7	TRANSISTOR	Q301, Q302	3430308	2	2
6	MOUNT. BASE	REV. - C	2061281	1	1
5	FOAM PAD	REV. - B	1290261	1	1
4	SUPPORT PLATE	REV. - A	2061299	1	1
3	SUPPORT BAR	REV. - A	2061307	1	1
2	ENCLOSURE	REV. - G	2040082	1	1
1	P.C. BOARD	REV. -12, -22	5472180	1	1
ITEM	DESCRIPTION	REF. DES.	STOCK NO.	QTY	

F	MOVE BUS JUMPER FROM L.T. TO R.T. ECO 3672 DEC 10-15-82
E	REMOVE IC301 ETC C315 WAS 22pf ECO 3664 10-20-82
D	C317 WAS 1-14PF C332 WAS 4-10PF ECO 3532
C1	L308 WAS .68uh ECO 3479, 11-25-81
B1	COMPONENT ECO 3113
A1	ORIGINAL RELEASE
A	R321 WAS 6800 ECO 3134 WAS 10K

MOSELEY ASSOCIATES, INC.
SANTA BARBARA, CALIFORNIA

COMPONENT LAYOUT
XMTR FMO 150/240/330 MHz

20C2763 F

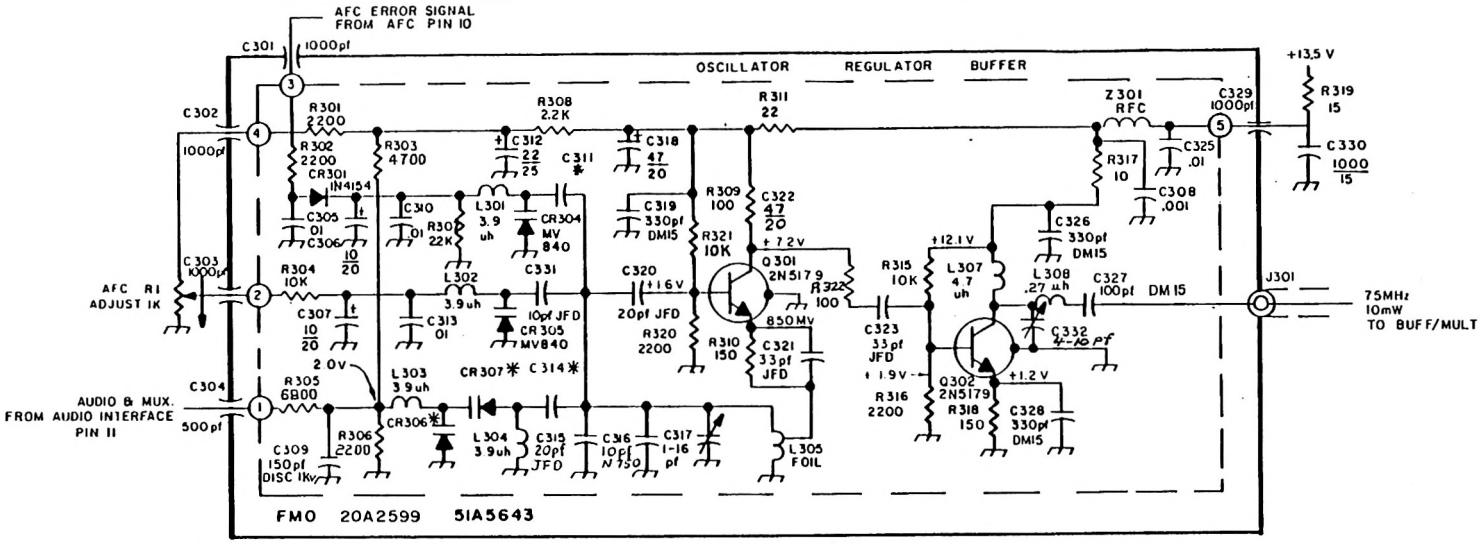

NOTES

1 UNLESS OTHERWISE SPECIFIED
RESISTOR VALUES ARE IN OHMS 1/4W, 10%
CAPACITOR VALUES ARE IN MICROFARADS

2 * DENOTES SELECTED VALUE

3 RF VOLTAGES MEASURED USING TEKTRONICS 581 SCOPE, WITH TYPE 82 PLUG-IN, AND NON COMPENSATED PROBE

4 DC VOLTAGES TESTED WITH 10MEG INPUT DVM

5 VOLTAGES SHOULD BE WITHIN 20% OF THAT SHOWN ON THE SCHEMATIC.

6 COMPONENT LAYOUT 2002763 C1

7. PC BOARD 5185894 U2

	CR 306*	CR 307*	C314*	C311,
ITEM 1 150/240/330MHz	88105 A	88105 A	.001	20pf JFD
ITEM 2 450/960MHz	MV840	MV840	10PF JFD	10 pf JFD

REMOVED IC301 - ASSOCIATED CIRCUITRY C316 WAS 2pf, N750 C315 WAS *, ECO 3604 10-10-82 S.J.
C308 WAS .68 µf. ECO 1899, 9-12-80
B COMPONENT CHGS. ECO 1812
A R321 WAS 6800, 330MHz WAS WIRED, ITEM 2. ECO 1398 22 MAY 80
REVISIONS DATE

MOSELEY ASSOCIATES, INC.
SANTA BARBARA RESEARCH PARK
GOLETA CALIFORNIA 93117

SCHEMATIC
XMTR FMO 150/240/330MHz & 450/960MHz

TOL FRACT ± 1/32 .XX ± .030 .XXX ± .010 ∠ ± 1/2°
DWN D.T.W. 4 OCT 79 SCALE
CHK 1/12
ENG 1-16-
91B7195 D

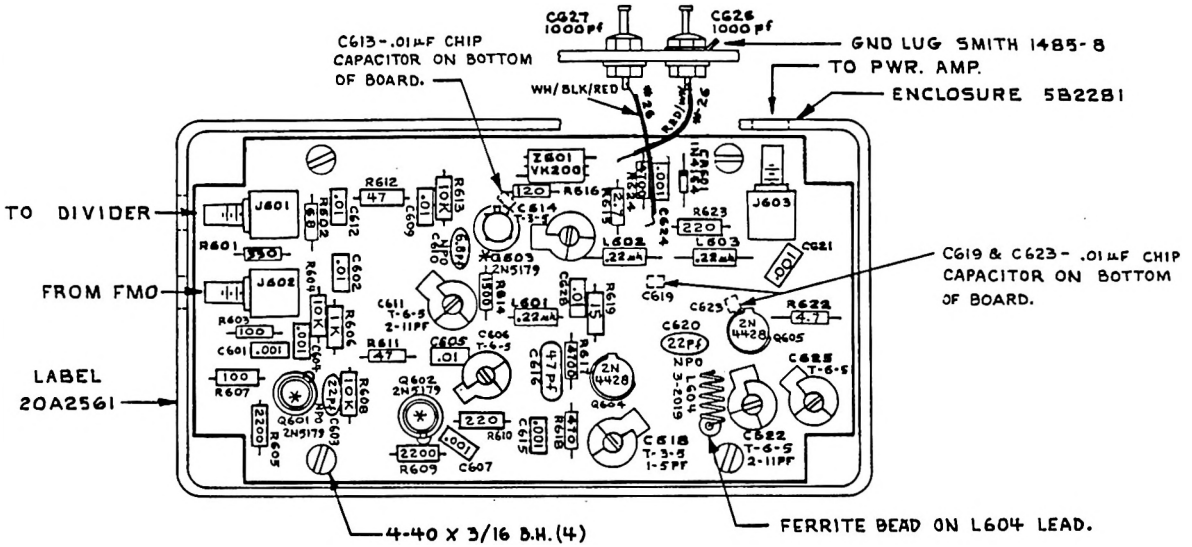

NOTES:

1. UNLESS OTHERWISE SPECIFIED, RESISTOR VALUES ARE IN OHMS, 1/4W, 10% CAPACITOR VALUES ARE IN MICROFARADS.
2. SOLDER ALL RESISTORS & CAPACITORS THAT GO TO GROUND ON BOTH SIDES OF P.C. BOARD.
3. P.C. BOARD 91A5659 REV. C7.
4. SCHEMATIC 9186877. REV. Gϕ.
5. * TRIM Q601-3 LEADS TO 1/8" $^{+1/32}_{-0}$" WHEN USING GREEN 4 PIN SOCKETS.
6. SOLDER ALL .01 UF CHIP CAPACITORS WITH SILVER-BEARING SOLDER. FED. SPEC QQ-S-571 OR EQUIV.

H1	PARTS LIST QTY. CORRECTIONS P.C.O. 3429 SAPR82 CH	H0	DELETE CAPT. R614 WAS 33, R622 WAS 10. 6C02866 18 MAR81 CAH	G	ARTWORK REV-07 MAJOR REVISION E.C.O. 3140. 21 JUL 76 FXY	F	TO CHOP & CONDITION PER E.C.O. 3 JAN 76 PHL	E	Q602 WAS 2N5179 AND CAPT. WAS 1.5 PER REV. 06 ARTWORK REV-06 19 JAN 76 FXY	D	DELETED CAPT. C628 & C629 MAJOR VALUES CHGS. PER E.C.O. 759 2-17-76 GM	C	ADDED NOTES 5 & 6 REMOVED C628 & C629 C610 WAS 22PF NPO CHANGED MFG. FROM 2N3863 TO 2N4428 L.I.	B	CHG R608 WAS 10K, R614 WAS 33, AND C618 WAS 2PF NPO 2-8-76 GM	A	REVISIONS	DATE	MGMT. APPR.

MOSELEY ASSOCIATES, INC.
SANTA BARBARA RESEARCH PARK
GOLETA, CALIFORNIA 93017

COMPONENT LAYOUT
XMTR BUF. MULT.

TOL: FRACT. ± 1/32. .XX ± .030. .XXX ± .010. ∠ ± 1/2°

DWN	G M	12-19-75	SCALE: FULL
CHK	FXY	21 JAN 76	20A2561 H1
ENG	[illegible]	21 Jan 76	

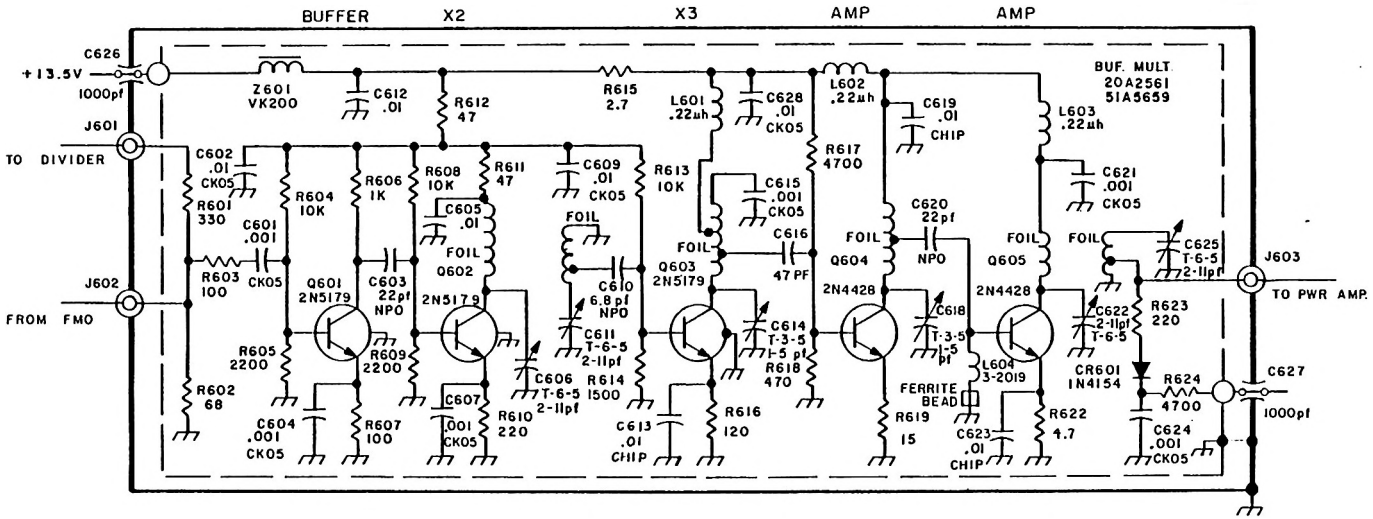

NOTES:

1. UNLESS OTHERWISE SPECIFIED, RESISTOR VALUES ARE IN OHMS, 1/4W, 10%, CAPACITOR VALUES ARE IN MICROFARADS.
2. P.C. BOARD 51A5659.
3. COMPONENT LAYOUT 20A2561.

G	DELETE C617, R619 WAS 33, R622 WAS 10. ECO 20065	
F	ADDED NEW CHANGES ECO 7910. 24 JUL 72	F.X.Y.
E	DELETED TUNE C. CHANGED BOOT UNITS TO PICOFARADS. — CLIP ECO 20	
D	ADDED WASSERSTRIM AND CHG. ECO 871	21MAR77 F.X.Y.
C	DELETED C617, C623 & C624. MAJOR VALUE CHGS. ECO 20	3 OCT 74 G.M.
B	REMOVED C. 680 22pF CHIOWASSERS. 0602603, WAS 2M 33M3 20FEB74	L.I.
A	ADD C626 (22µf/10) R629 WAS 33, R608 WAS 10	5 FEB 74
REVISIONS		DATE
MGMT. APPR.		

MOSELEY ASSOCIATES, INC.
SANTA BARBARA RESEARCH PARK
GOLETA, CALIFORNIA 93117

SCHEMATIC
XMTR BUF. MULT.

TOL: FRACT. ± 1/32, .XX ± .030, .XXX ± .010, ∠ ± 1/2°

DWN	G M	12-22-75	SCALE: NONE
CHK	FXY	21JAN76	91B6877 G
ENG		21 JAN 76	

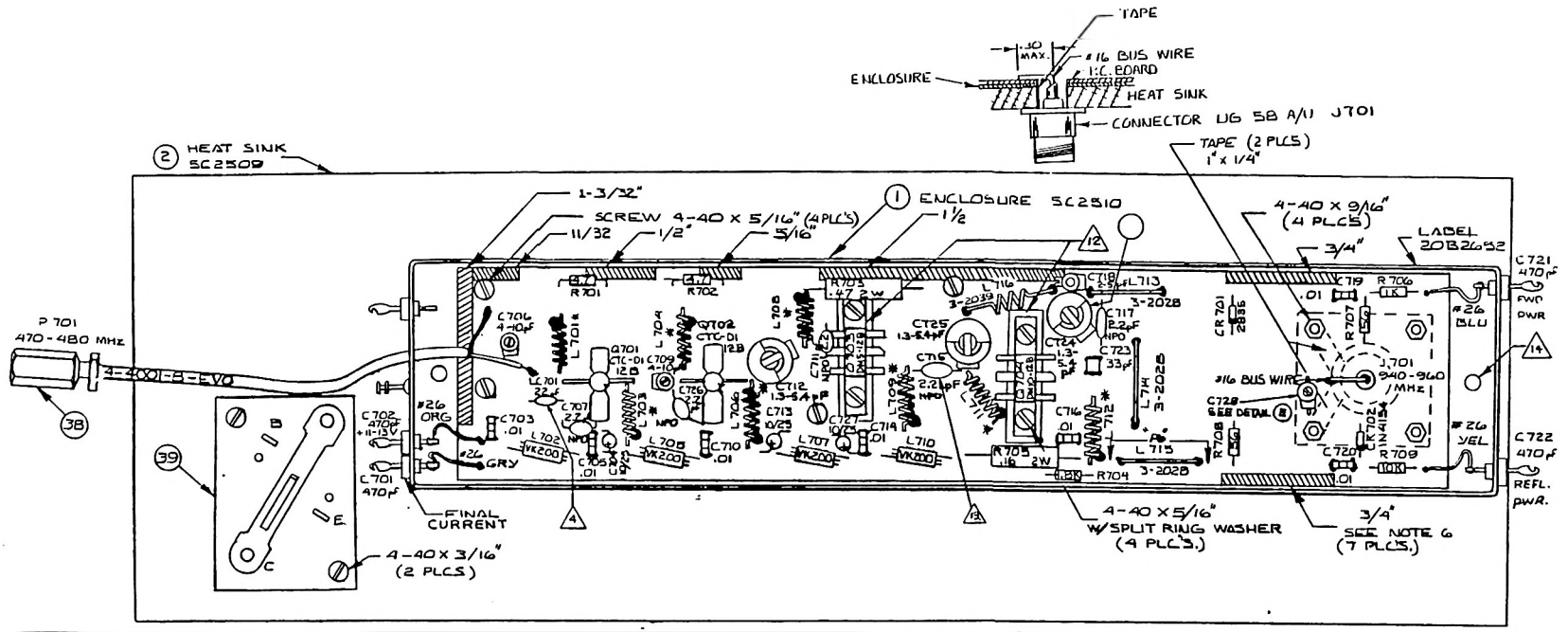

NOTES:

1. UNLESS OTHERWISE SPECIFIED, RESISTOR VALUES ARE IN OHMS, 1/4 W, 10%. CAPACITOR VALUES ARE IN MICROFARADS
2. P.C. BOARD 51A5750, REV. -06
3. SCHEMATIC 91B7055, REV. E1
4. BEND AND TRIM LEADS OF LC 701 AS SHOWN:

5. # DENOTES AIR COIL 3-2022 AT: L701, L703, L704, L706, L708, L709, L711, L712.
6. COPPER TAPE CUT IN 3/16" WIDTH WRAPPED AROUND EDGE OF BOARD AND SOLDER TO BOTH SIDES. ALSO 4 PLACES ON EACH RECTANGULAR HOLE. WHEREVER FOIL PATTERN EXTENDS TO EDGE, TAPE AND SOLDER TO BOTTOM FOIL, EXCEPT AT J701. SEE DETAIL (B)
7. TAPE HOLES FOR Q701 AND Q702 BETWEEN WIDE LEADS IN MANNER SHOWN IN DETAIL (C)
8. USE SILVER-BEARING SOLDER, (FED. SPEC. QQ-S-571 OR EQUIV.), KESTER ALLOY SN62 OR EQUIV., ON ALL PADS FOR CHIP CAPACITORS. DO NOT MIX SOLDER.
9. C706 IS EFJ 278-0410-005 (4-10 PF) OR JOHANSON 9372 (3-12 PF).
10. INSTALL Q701 AND Q702 STUD NUTS WITH TORQUE WRENCH AND SET TO 5 IN./LB ±1 IN./LBS. USE #8 EXT. TOOTH WASHERS (ITEM 43) AND #8-32 NUTS (ITEM 44) 2 PLCS. USE HEAT SINK COMPOUND. SEE DETAIL (D) FOR ORIENTATION.

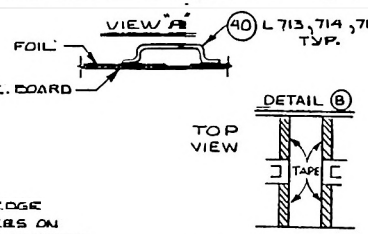

11. SOLDER Q701 AND Q702 TABS AFTER ASSEMBLY HAS BEEN MOUNTED TO HEAT SINK.
12. USE HEAT SINK COMPOUND WHILE INSTALLING Q703 AND Q704.
13. CAPACITOR DIAMETER (d) DETERMINES LEAD LENGTH. CHECK DIAMETER BEFORE BENDING.

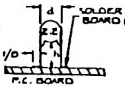

FOR d = .265" DIA. h = .110" HEIGHT
FOR d = .195" DIA. h = .156 HEIGHT
RESONANT FREQ. OF REACTIVE ELEMENT 1200-1225 MHz.

14. ALIGN WITH TAPPED HOLE IN HEAT SINK BOTH ENDS.
15. TRIM LEADS OF C712, C724, & C725 FLUSH WITH BOTTOM OF CAPS, TOP SOLDER TO BOARD - SEE DETAIL (F)

DETAIL (F) (15)

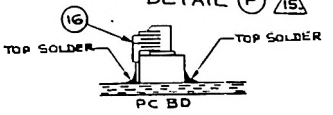

DETAIL (C)

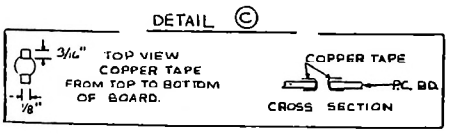

DETAIL (D)

TRIM LEADS TO 1/8"
NOTCH INDICATES ORIENTATION
DO NOT PUSH DOWN WHEN INSTALLING

C728 DETAIL (E)

DO NOT TRIM LEADS. BEND LEADS AS SHOWN. INSTALL ONE END CLOSE TO #16 BUSS WIRE.

MOSELEY ASSOCIATES, INC.
SANTA BARBARA RESEARCH PARK
GOLETA, CALIFORNIA 93117

COMPONENT LAYOUT
960 MHz AMPLIFIER XMTR

TOL: FRACT. ± 1/32. .XX ± .03, .XXX ± .010, ∠ ± 1/2°			
DWN	AJB.	3-18-81	SCALE 2 X
CHK			20D2652 M
ENG		3-24-81	

QTY.	DESCRIPTION	REF. DES.	STOCK NO.	ITEM
				63
				62
				61
				60
				59
				58
				57
				56
				55
				54
				53
				52
				51
4	WASHERS #4 SPLIT RING		1050632	50
4	NUTS, #4-40		1050582	49
4	SCREWS #4-40 x 9/16 BH		1050202	48
8	SCREWS #4-40 x 5/16 BH		1050145	47
2	SCREWS #4-40 x 3/16 BH		1050103	46
				45
2	NUTS #8-32		1130277	44
2	LOCKWASHER EXT. TOOTH #8		1130301	43
				42
1	COIL, 3T-#20 3-2039 AØ	L 716	4010732	41
3	INDUCTOR 3-2028	L713,714,715	4010625	40
1	SOCKET INDELC LST2202-2		3250214	39
1	CABLE 4-4001-8-EVO	P 701	2200277	38
1	CONNECTOR UG 58 A/U	J 701	3030178	37
				36
				35
1	" CTC DM10-12B	Q 704	3640141	34
1	" CTC DM5-12B	Q 703	3640133	33
2	TRANSISTOR CTC DI-12B	Q701, Q702	3640109	32
				31
1	DIODES 1N4154 GENERAL	CR702	3600145	30
1	DIODES HP 5082-2835	CR701	3610045	29
				28
4	" FEED THRU SPECTR 54-794-002-471M	C701, C722, C731, C732	4350047	27
				26
5	" 2.2pF CRL DTZ-2R2 NPO	C707, 709, 715, 710, 726	4300018	25
2	" 4-10pF EFJ 278-0410-005	C706 C709	4370300	24
1	" 2-5pF EFJ 278-0105-005	C 718	4370284	23
1	" 22pF CRL DTZ-22	LC701	4300133	22
3	" 10µF/20V SPRAGUE 196D106X0025KAT	C704, 713, 727	4280079	21
7	" .01µF WIDOBF103MP	C703, 705, 710, 714, C716, 719, 720	4350161	20
1	CAPACITOR 33pF-ATC 17AH330J500PS	C 723	4350146	19
1	CAP, TDK MCV50A1H030 1.3pF	C 728	4370276	18
				17
3	CAP, 1.3-5.4 pF, EFJ 187-0103-005	C712, 724, 725	4370003	16
1	RESISTOR 1.8K Ω 1/4W 10% CARBON	R 704	4410270	15
1	" 10K Ω 1/4W " "	R 709	4410379	14
1	" 1K Ω 1/4W " "	R 706	4410247	13
2	" 36 Ω 1/4W " "	R707, 708	4410098	12
2	" 4.7 Ω 1/4W 10% "	R701, R702	4410015	11
1	" .47 Ω 2W 5% " IRC	R703	4590048	10
1	RESISTOR 0.16Ω, 2W, 5% CARBON, IRC	R705	4590022	9
				8
				7
4	FERROX CUBE VK-200-20/4B	L702, L703, L704, L705	4020368	6
				5
8	R.F. CHOKE M.A.I. 3-2022	L701, 703, 704, 706, 708, 709, 711, 712	4010567	4
1	P.C. BOARD M.A.I. 5185750	REV. -C06	3470267	3
1	HEAT SINK M.A.I. 5C2509		2110138	2
1	ENCLOSURE M.A.I. 5C2510-1		2090181	1

MOSELEY ASSOCIATES, INC.
SANTA BARBARA, CALIFORNIA

COMPONENT LAYOUT
360 MHz AMPLIFIER XMTR

20D26652 M

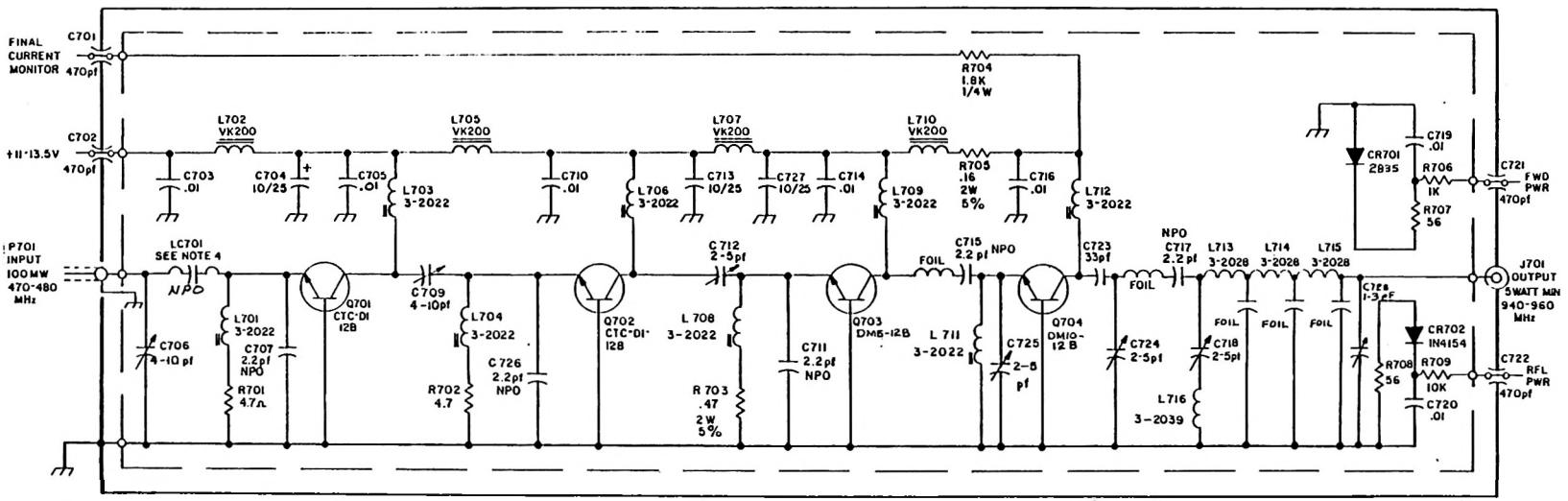

NOTES:

1. UNLESS OTHERWISE SPECIFIED RESISTOR VALUES ARE IN OHMS, 1/4W, 10%. CAPACITOR VALUES ARE IN MICROFARADS.
2. P.C. BOARD 51A5750. REV. -06
3. COMPONENT LAYOUT 20D265.
4. LC701 HAS 22pf 5/16" LEAD.

REVISIONS	DATE		
E	ADD C728 ECO 33386 30MAR82	CH	
D	CH'G 2M, CHANGED PC 3073		
C	CHANGED R705, R707 ECO 11-0		
B	COMPLETE REDESIGN ECO 115		
A	CHANGES PER ECO 1055		

MOSELEY ASSOCIATES, INC.
SANTA BARBARA RESEARCH PARK
GOLETA, CALIFORNIA 93117

SCHEMATIC
960MHz POWER AMPLIFIER XMTR

TOL: FRACT. ± 1/32. .XX ± .030. .XXX ± .010. ∠ ± 1/2°

DWN JAM 21OCT77 SCALE: NONE
CHK
ENG

91B7055 B1

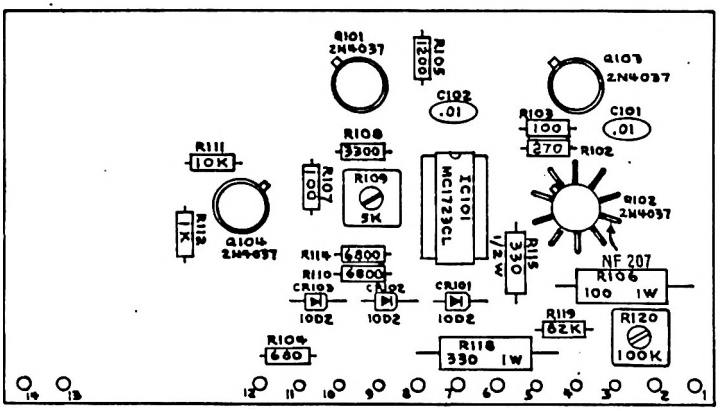

NOTES

1 UNLESS OTHERWISE SPECIFIED
RESISTOR VALUES ARE IN OHMS, 1/4W, 10%
CAPACITOR VALUES ARE IN MICROFARADS.

2 P.C. BOARD 51A5764

3 SCHEMATIC 91B6985

REVISIONS		DATE
C∅	R102 WAS 5C0A. EC01301 24-JULY79 D.T.W.	
B	DELETE CR105, Q105 & R113, 116 & 117. 21JUNE77	
A	DELETE CR104, R104 WAS 2000 OHMS. 20JULY77	

MGMT. APPR.

MOSELEY ASSOCIATES, INC.
SANTA BARBARA RESEARCH PARK
GOLETA, CALIFORNIA 93017

COMPONENT LAYOUT
XMTR POWER SUPPLY REGULATOR

TOL: FRACT. ± 1/32. XX ± .03. XXX ± .010. ∢ ± 1/2°

DWN	F X Y	25JAN 77	SCALE:
CHK			
ENG		25 Jan 77	20A2608 C∅

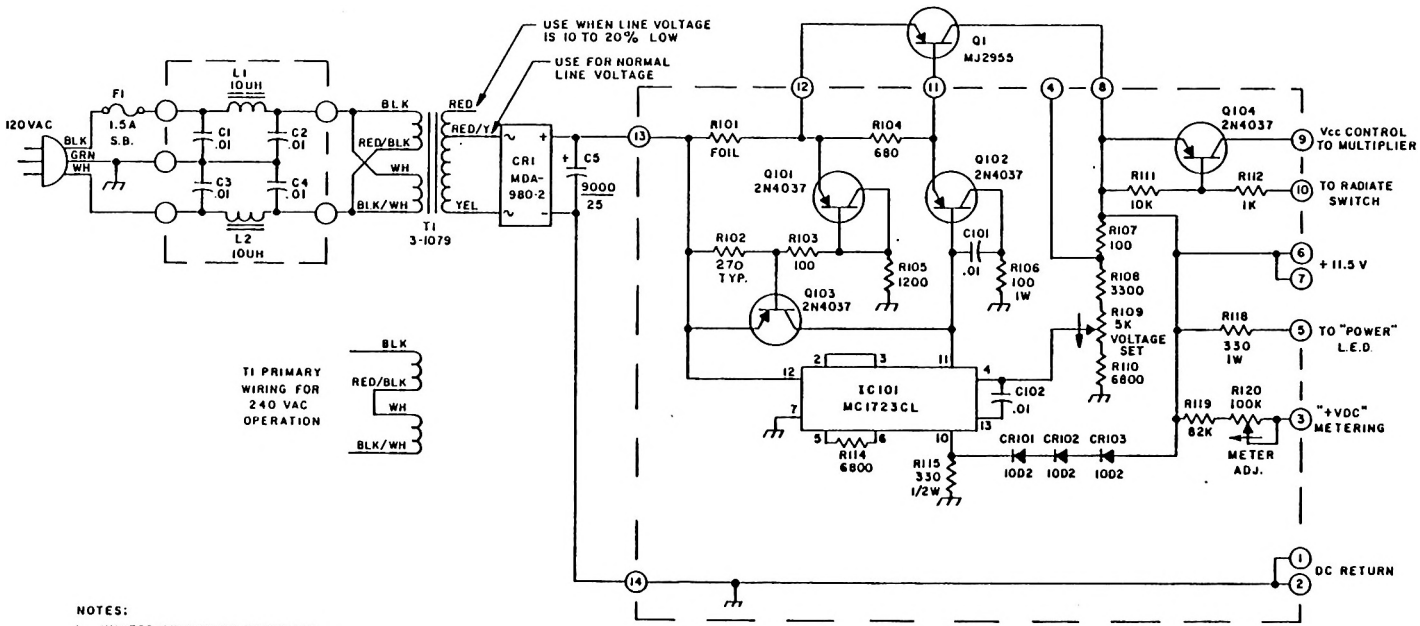

NOTES:

1 UNLESS OTHERWISE SPECIFIED
RESISTOR VALUES ARE IN OHMS, 1/4 W, 10%
CAPACITOR VALUES ARE IN MICROFANADS

2 P.C. BOARD 51A5764.

3 COMPONENT LAYOUT 20A2608.

MOSELEY ASSOCIATES, INC.
SANTA BARBARA RESEARCH PARK
GOLETA, CALIFORNIA 93117

SCHEMATIC
XMTR POWER SUPPLY REGULATOR

TOL: FRACT. ± 1/32 .XX ± .030 .XXX ± .010 ∠ ± 1/2°

DWN FXY 25JAN77 SCALE:

CHK

ENG

91B6955 C0

REVISIONS

A

B DELETE CR103, CHG L, R112 ECO1301 24JUL77 FXY

C R102 WAS 560Ω ECO1301 24JUL77 FXY

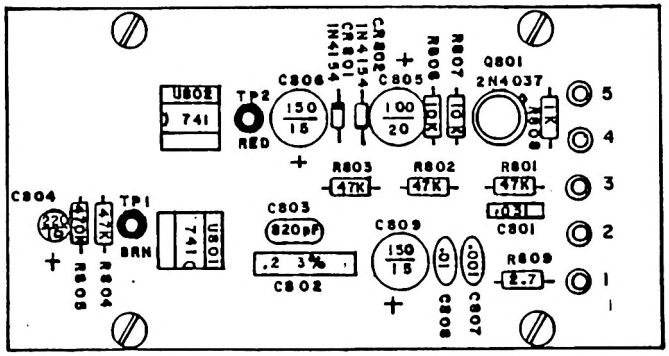

NOTES:

1. UNLESS OTHERWISE SPECIFIED
   RESISTOR VALUES ARE IN OHMS 1/4 W 10 %
   CAPACITOR VALUES ARE IN MICROFARADS
2. P.C. BOARD 51A5808
3. SCHEMATIC 9187048

A	ADDED WAS 2.2Ω	FXY	28NOV77	DATE	
	REVISIONS			MGMT. APPR.	

MOSELEY ASSOCIATES, INC.
SANTA BARBARA RESEARCH PARK
GOLETA, CALIFORNIA 93017

COMPONENT LAYOUT
XMTR LOSS OF LOCK SHUT OFF.

TOL: FRACT. ± 1/32, .XX ± .030, .XXX ± .010, ∢ ± 1/2°

DWN	L.I.	14SEPT77	SCALE: FULL	
CHK	FXY	27SEP77	20A 2650	A
ENG				

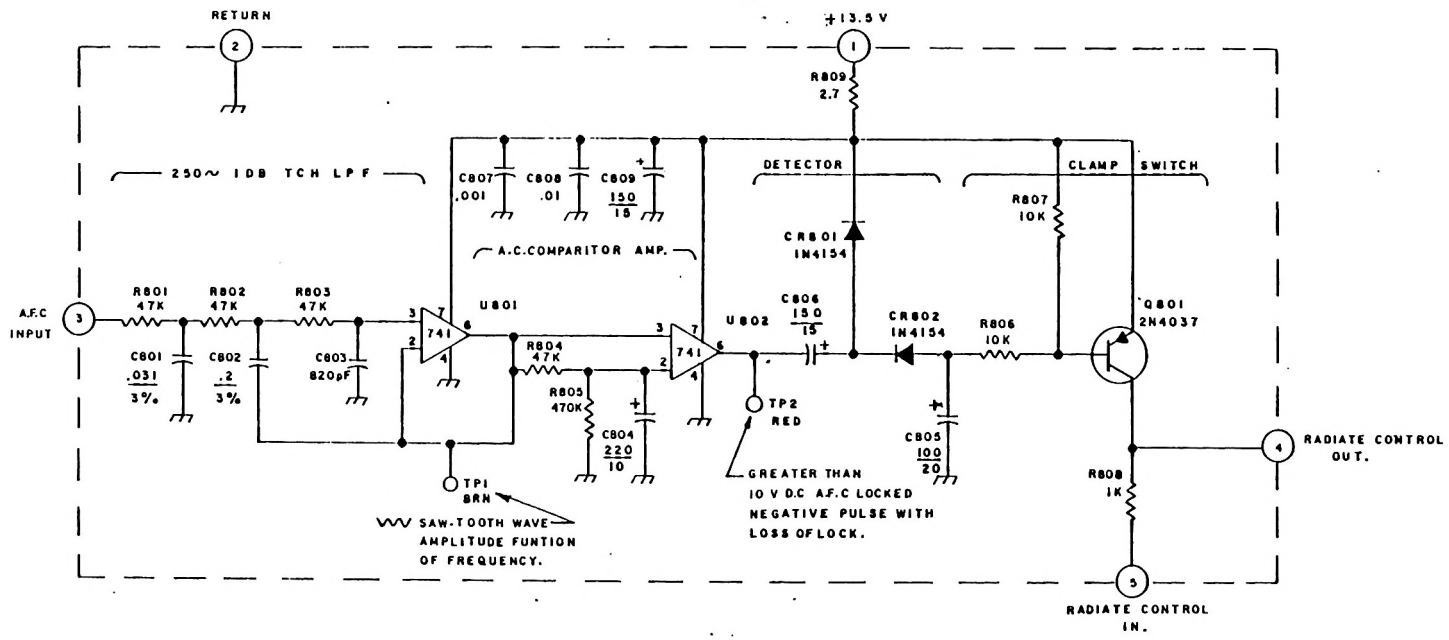

NOTES

1. UNLESS OTHERWISE SPECIFIED
   RESISTOR VALUES ARE IN OHMS 1/4 W 10%
   CAPACITOR VALUES ARE IN MICROFARADS
2. P.C BOARD 51A5808
3. COMPONENT LAYOUT 20A2650

MOSELEY ASSOCIATES, INC.
SANTA BARBARA RESEARCH PARK
GOLETA, CALIFORNIA 93117

SCHEMATIC
XMTR LOSS OF LOCK SHUT OFF

DWN	L.I.	3SEP77	SCALE: NONE
CHK	FXY	28SEP77	91B7048 A
ENG		29Sep77	

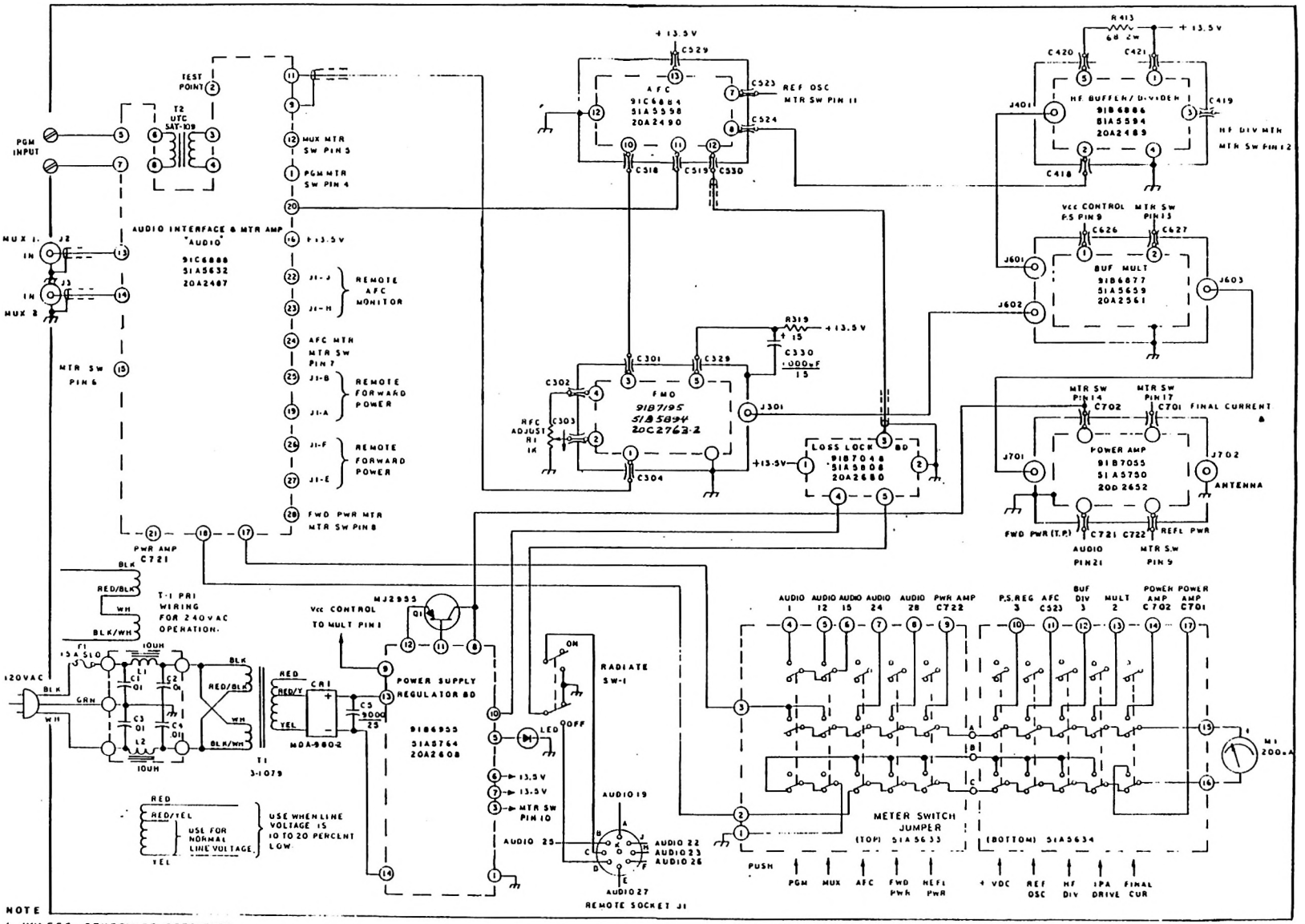

NOTE

1. UNLESS OTHERWISE SPECIFIED
   RESISTOR VALUES ARE IN OHMS 1/4W 10%
   CAPACITOR VALUES ARE IN MICROFARADS

SCHEMATIC
PCL-505/950MHz MONAURAL XMTR

91C7052 A

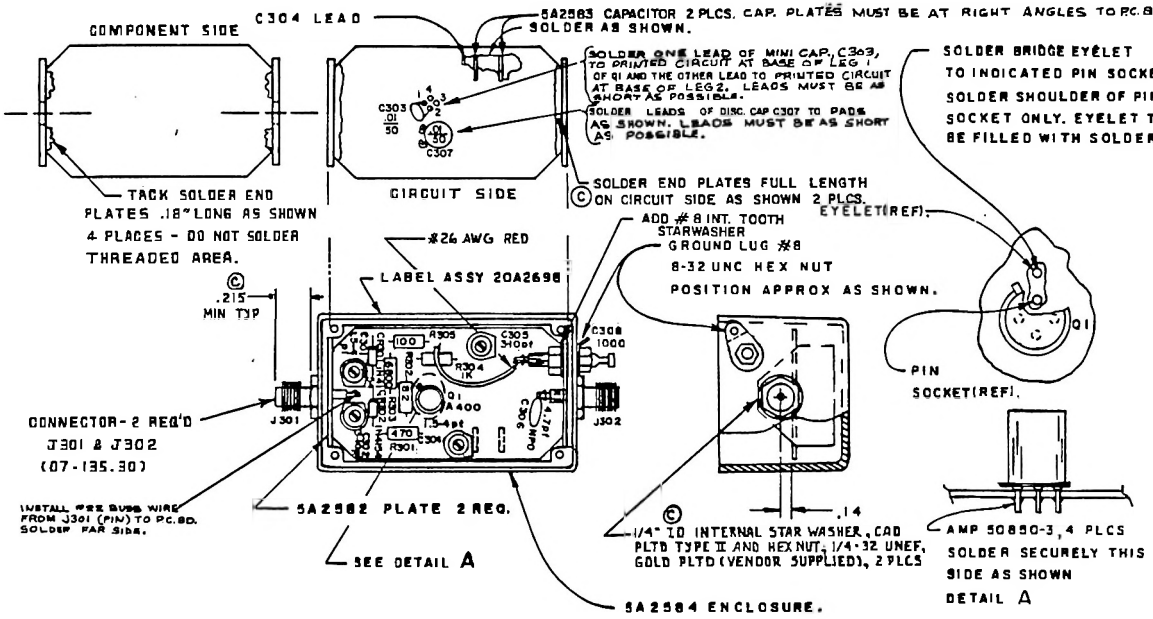

NOTES

1. UNLESS OTHERWISE SPECIFIED RESISTOR RESISTOR VALUES ARE IN OHMS 1/4 W 10 %
   CAPACITOR VALUES ARE IN MICROFARDS.
2. P. C. BOARD 51A5817-02
3. SCHEMATIC 91A7109
4. USE JIG TO ASSEM 5A2582 PLATES TO P.C. BOARD 51A5817 BEFORE ANY COMPONENTS ARE MOUNTED.
5. SOLDER GND. END OF C301, CR301 & R302 TO TOP SIDE GROUND PLANE.

REVISIONS	DATE	MGMT. APPR.
F — CHANGED NOTES FOR C307 C303 ON CIRCUIT SIDE. EC 03594	12 JUL 82	C.N.
E2 — ADD ITEM 9, 5A2582 PLATE, ADD ITEM 10, 5A2583 CAP. ADD NOTE 4 TO NOTES. CHG. C303 AND C307 TO MINI AND DISC. CAP. CHG. 51A5817 TO 51A5817-02		
E1 — REVISING EC03 AS ADDED A INT TOOTH STAR WASHER, CHANGED TYPE AND PLD TYPE II.		
D1 — END PLATE SOLDERING DETAILS ADDED. P-C BOARD CHANGED. D.T.M.		
D0 — ADDED FALLOUTS AS INDICATED EC 01-1, 1237, 1004, 1179, 1244.		
C — ADDED SOLDER BRIDGE REQ.		
B — ALTER PER ECO 01-1, 1237.		
A — RELEASED. ECO 5-5-5.	25 JUL 78	F.X.Y.

MOSELEY ASSOCIATES, INC.
SANTA BARBARA RESEARCH PARK
GOLETA, CALIFORNIA 93017

COMPONENT LAYOUT
950 MHz PRE-AMP RECEIVER.

TOL: FRACT. ± 1/32. .XX ± .030. .XXX ± .010. ∠ ± 1/2°

DWN	L.I.	26MAY78	SCALE: FULL	
CHK	FXY	26JUL78	20A2698	F
ENG				

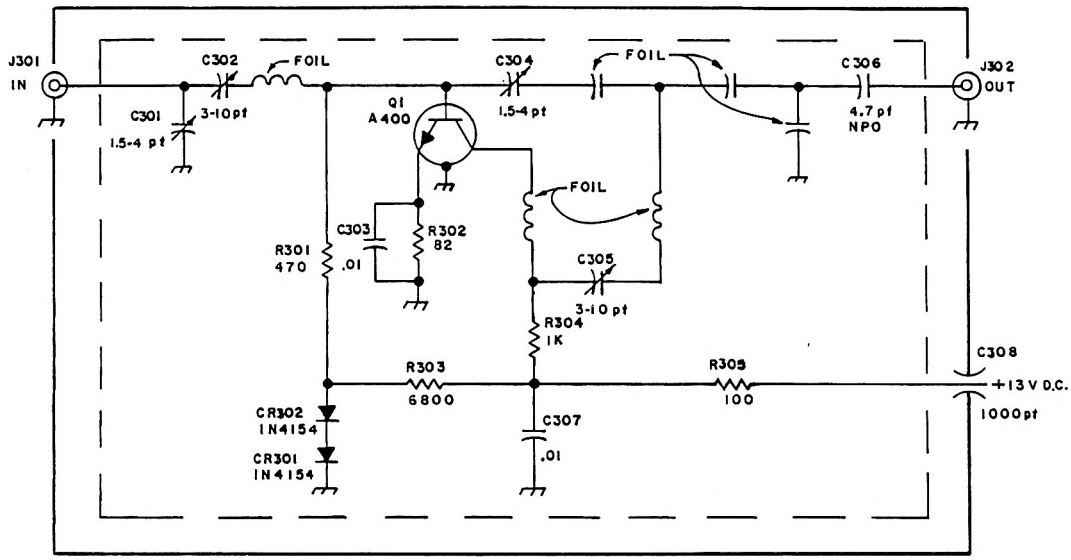

NOTES:

1. UNLESS OTHERWISE SPECIFIED RESISTOR VALUES ARE IN OHMS 1/4 W 10%
   CAPACITOR VALUES ARE IN MICROFARADS
2. P. C. BOARD 51A5817
3. COMPONENT LAYOUT 20A2698

A4 RELEASED for PROD ECO 1603 7-29-71	REVISIONS	DATE	MGMT. APPR.

MOSELEY ASSOCIATES, INC.
SANTA BARBARA RESEARCH PARK
GOLETA, CALIFORNIA 93017

SCHEMATIC
950MHz PRE-AMP RECEIVER.

TOL: FRACT. ± 1/32. .XX ± .030. .XXX ± .010. ∠ ± 1/2°

DWN	L.I.	11MAY78	SCALE: NONE
CHK	FXY	26JUL78	91A7109 A4
ENG	CM		

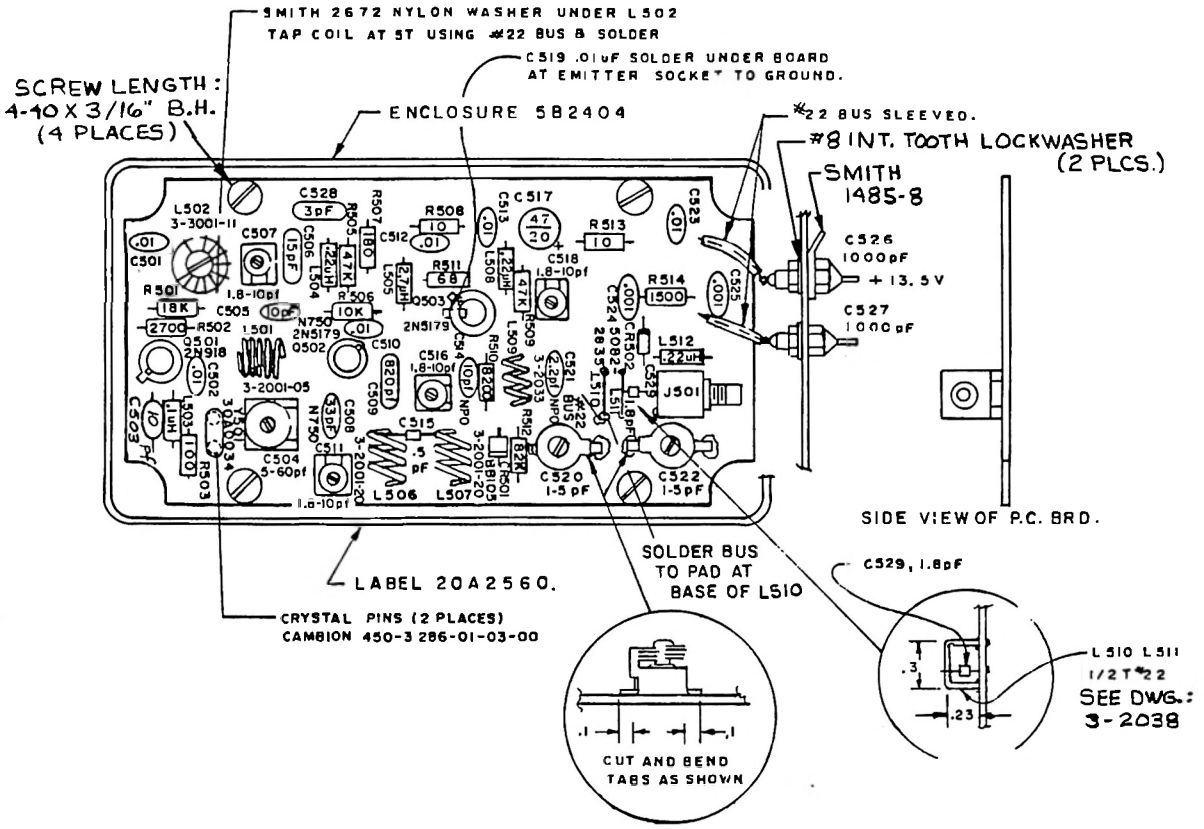

NOTES:

1. UNLESS OTHERWISE SPECIFIED
   RESISTOR VALUES ARE OHMS 1/4W 10%
   CAPACITOR VALUES ARE IN MICROFARADS
2. P.C. BOARD 51A5692-05
3. SCHEMATIC 9186873
4. $Y501 = \frac{Fc - 74.000\ MHz}{16}$ (30A0034)
5. INSTALL L506 L507 L501 & L509 1/16" OFF BRD.

K1	REMOVED TOP SOLDERING AS PER ECO 1294 24-JUL-79 D.T.V.		
K	ADDED SCREW LENGTH NOTE 24 JUN 78 ECO 1264 A.J.B.		
J	ADD LOCKWASHER. ADD C503, 10pF ECO 1244, 1195 WPG 26-MAY		
I	REMOVE NOTES 5,7. ARTWORK REV 06 20 AUG 77 ZAM		
H	ADDED C528 & 529, DELETED L504 & C503, CHANGE PER ECO 1195 WPG 26-MAY		
G	VALUE CHANGES PER ECO 1029 10 NOV 76		
F	ARTWORK REV OF MAJOR REVISION. 22 SEP 78 F.X.Y.		
REVISIONS		DATE	
MGMT. APPR.			

MOSELEY ASSOCIATES, INC.
SANTA BARBARA RESEARCH PARK
GOLETA, CALIFORNIA 93017

COMPONENT LAYOUT
RCVR LOCAL OSC

TOL: FRACT. ± 1/32, .XX ± .030, .XXX ± .010, ∠ ± 1/2°

DWN	L.I.	4AUG 78	SCALE: FULL
CHK			
ENG	[illegible]	[illegible]	20A2560 K1

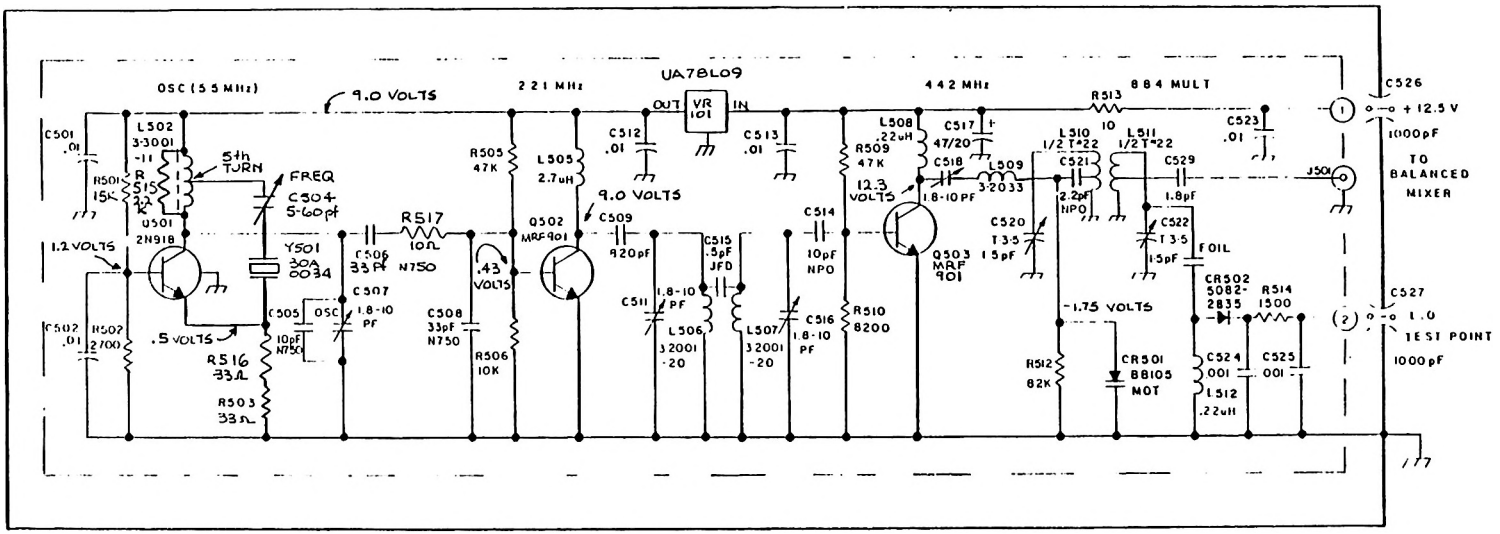

NOTES:

1. UNLESS OTHERWISE SPECIFIED
   RESISTOR VALUES ARE IN OHMS 1/4W 10 %
   CAPACITOR VALUES ARE IN MICROFARADS.
2. P.C. BOARD 51A5692-06
3. COMPONENT LAYOUT 20A2560

DELETED R507 R508 R511 C503 C505 C506 C507 C508 R515, R516, PS11 VARIOUS CHG VALUE OF R504 R509 R510 R512 Q502 & Q503 WERE 2N5174. ECO 3678 9-28-82 JM		G	ADDED TERM. DATA. TERM E LESS, LABELS ECO 115 JMARTIN 7-8-80	E	REDRAWN & REDESIGN 17 AUG 78
		F	TOOL & REF CHANGES PER ECO 3378 DAVIS 7-5-79		

REVISIONS | DATE | MGMT APR.

MOSELEY ASSOCIATES, INC.
SANTA BARBARA RESEARCH PARK
GOLETA, CALIFORNIA 93117

SCHEMATIC
RCVR LOCAL OSC.

TOL: FRACT. ±	DEC. ±	ANG. ±	SIZE	REV. ∠ ± 1/2°
OWN L. I.	2AUG78	SCALE NONE		
CHK				
ENG			91B6873	J

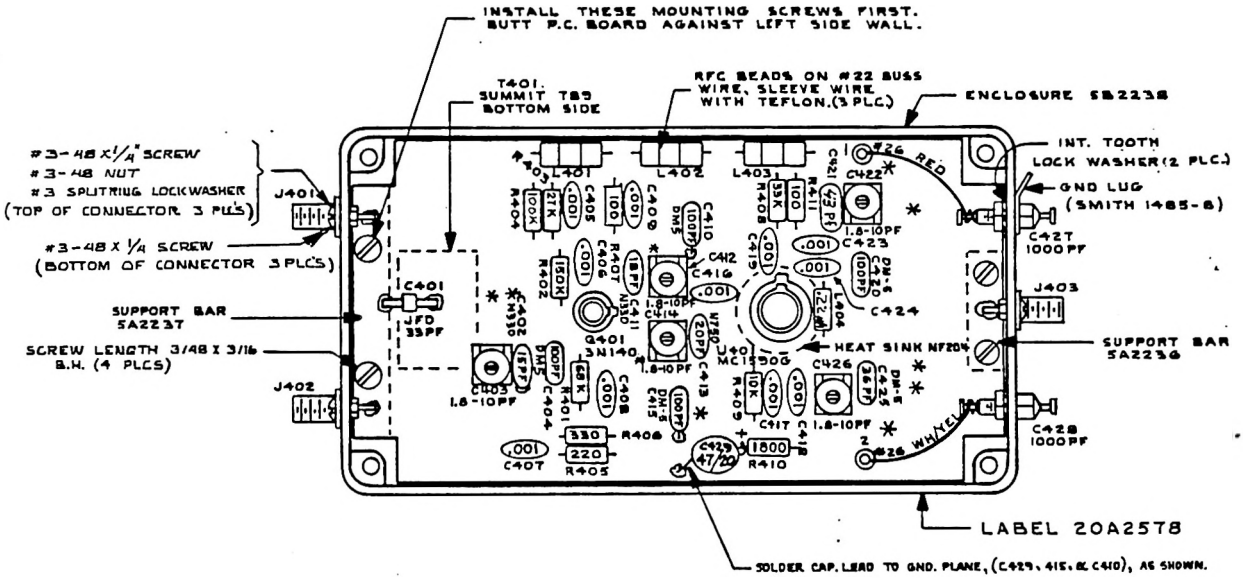

NOTES:

1. UNLESS OTHERWISE SPECIFIED RESISTOR VALUES ARE IN OHMS, 1/4W, 10%. CAPACITOR VALUES ARE IN MICROFARADS.
2. P.C. BOARD 51A5721 REV. –
3. SCHEMATIC 9186914 REV. EØ
4. * PUT #26 BUS WIRE THROUGH HOLES IN INDUCTOR AND SOLDER. HEAT FROM TOP OF BOARD ONLY. BE SURE SOLDER FLOWS THROUGH.
6. SEE ASSEMBLY INSTRUCTIONS FOR 20A2578.
7. FILL ALL UNUSED HOLES WITH SOLDER.
8. LENGTH OF PINS IN IC401 SHOULD BE 5/32".

REVISIONS		DATE
H2	C405-409, 415-419, C423-427 WERE ECO 1588	
G2	C421 WAS 43 pf R404 WAS 27K L404 WAS .47μH ECO 1956 10-28-80	
F2	CHG. W-40 X 3/16 TO 3-48 X 3/16 11-18-80 ECO 1807 J.J.G.	
F1	NOTE 5 REMOVED. PCO 1346 ZIMMER D.T.W.	
E1	NOTE 8 ADDED. PCO 1287 23 JULY 79 D.T.W.	
E	ADDED SCREW LENGTH NOTE. 29 JUN 79 ECO 1269 K.S.B.	
D	15 MARCH 78 ECO	
C	ADD NOTES 4 & 7. CHANGE ALL R16 ON CAPS ECO 968 10-27-77 F.X.Y.	
B	R410 WAS 4700Ω. C421 WAS 27pf ECO 836 4-14-77 F.X.Y.	
A	L404 WAS 10UH, R21 WAS 22pf 22 OCT 76 ECO 847 L.I.	

MGMT. APPR.

MOSELEY ASSOCIATES, INC.
SANTA BARBARA RESEARCH PARK
GOLETA, CALIFORNIA 93017

COMPONENT LAYOUT
RCVR BALANCED MIXER/74 MHz I.F.

TOL: FRACT. ± 1/32. .XX ± .030. .XXX ± .010. ∠ ± 1/2°

DWN	G.M.	5-17-76	SCALE:
CHK	F.X.Y.	10 JUN 76	20A2578 H2
ENG	P.D.W.	11 JUN 76	

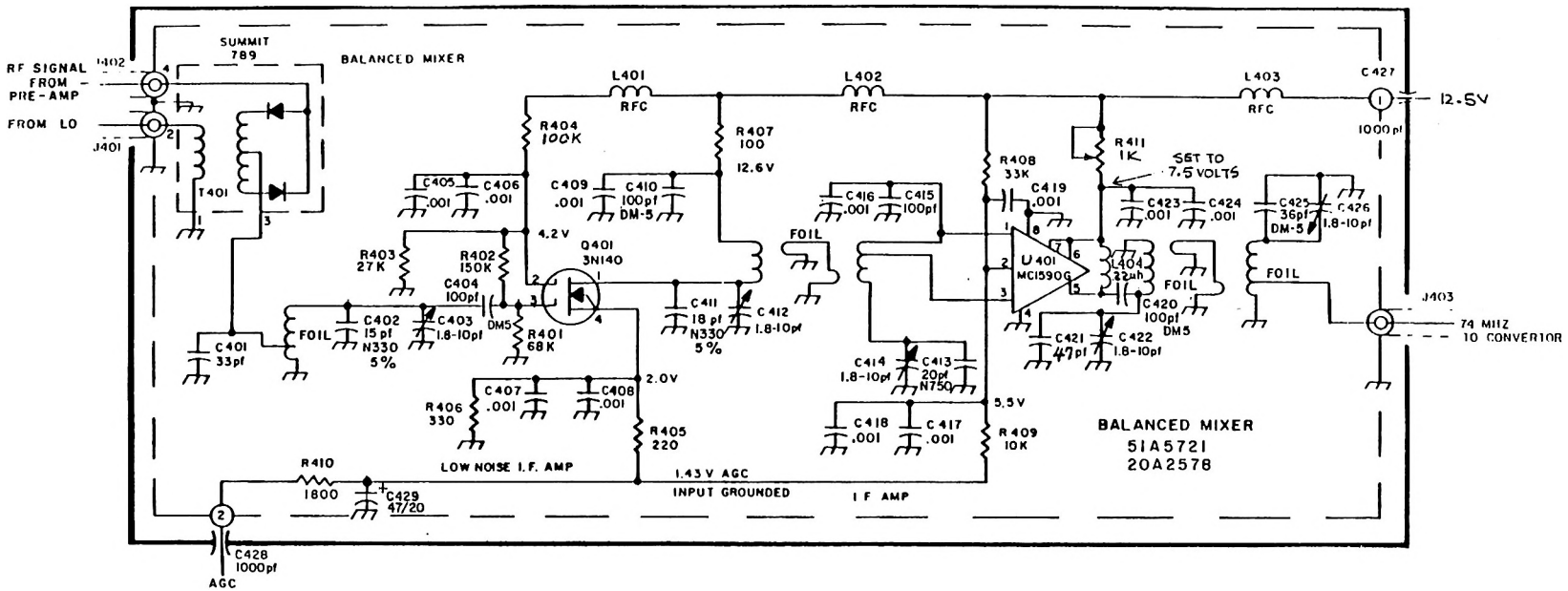

NOTES:

1. UNLESS OTHERWISE SPECIFIED
   RESISTOR VALUES ARE IN OHMS, 1/4 W, 10%
   CAPACITOR VALUES ARE IN MICROFARADS.
2. COMPONENT LAYOUT 20A2578 REV. K
3. PC BOARD 51A5721 REV. -11, -21

G	R421 WAS 43pf ECO 3682, 1-10-72	
F	R411 WAS 100Ω ECO 3625 9-2-82 JM	
E	C421 WAS 33pf R404 WAS 27K R404 WAS 47K/1% ECO 4156, 10-28-80	
D	ECO 4085, 10-20-79	
C	C408, 7, 11, 18 ALL WERE .01 ECO 3688, 7 OCT 77 FXY	
B	R410 WAS 1800 CAPACITOR WAS 27pf ECO 3696 8 AUG 77 FXY	
A	C408 WAS FOR C421 WAS 5pf 1-408 WAS FOR C421 WAS 5pf ECO 3647 7-6 ECO 847 L.I.	
	REVISIONS	DATE
	MGMT APPR	

MOSELEY ASSOCIATES, INC.
SANTA BARBARA RESEARCH PARK
GOLETA CALIFORNIA 93117

SCHEMATIC
BALANCED MIXER/74 MHz I.F. RCVR

TOL	FRACT ± 1/32	XX ± .030	XXX .010
DWN	GM	5-21-76	SCALE
CHK	FXY	10 JUN 76	91B6914
ENG	PDH	11 JUN 76	G

*	C19	C6	C8	C14
MONO ITEM 1 (192 KHz BW)	6.8	3.3	2.2	1300
COMPOSITE ITEM 2 (300KHz BW)	10	4.7	3.3	1100

CHART VALUES ARE IN PICOFARADS

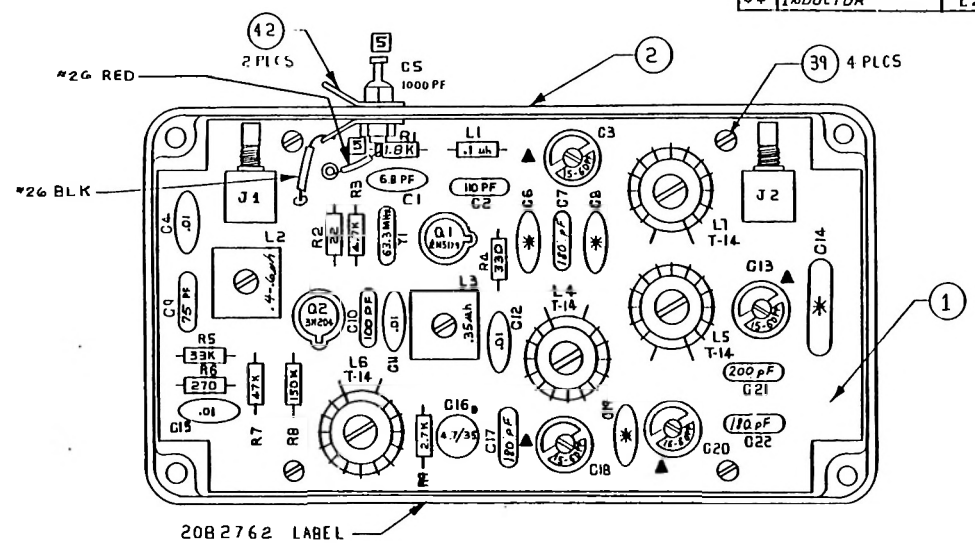

43	INDUCTOR CORE	BLACK	4130407	2	42	GNDLUG, WALDON T-195M	C5	1130384	2
44	INDUCTOR	L2	4041836	1	41	CAPACITOR	C5	4350096	1
					40	CRYSTAL PINS	Y1	3250446	2
					39	SCREW	#4-40 X 3/16	1050103	4
					38	NUT NYLON	#4-40	1050616	4
					37	WASHER, SHOULDER	NYLON	1090158	8
					36	SCREW NYLON	#4-40 X 1/2	1050194	4
					35	RESISTOR	R8	4410510	1
					34	"	R7	4410452	1
					33	"	R5	4410437	1
					32	"	R9	4410296	1
					31	"	R3	4410338	1
					30	"	R1	4410270	1
					29	RESISTOR	R6	4410171	1
					28	"	R4	4410189	1
					27	RESISTOR	R2	4410049	1
					26	CAPACITOR	C21	4210340	1
					25	CAPACITOR	C19	4300067	*
					24				
					23	"	C16	4280053	1
					22	"	C14	4220026	*
					21	"	C14	4220059	*
					20	"	C10	4210266	1
					19	"	C9	4210233	1
					18	"	C8	4300018	*
					17	"	C7, 17, 22	4210324	3
					16	"	C6	4300034	*
					15	"	C6, C8	4300026	1
					14	"	C4, 11, 12, 15	4310132	4
					13	"	C3, 13, 18, 20	4370149	4
					12	"	C2	4210274	1
					11	CAPACITOR	C1, C19	4300042	*
					10	TOROID	L4-7	4050131	4
					9	INDUCTOR	L3	4041828	1
					8	INDUCTOR	L1	4020286	1
					7	TRANS. SOCKET	Q1, Q2	3250321	2
					6	TRANSISTOR	Q2	3630415	1
					5	TRANSISTOR	Q1	3630308	1
					4	CRYSTAL	Y1	3340106	1
					3	CONNECTOR	J1, J2	3030319	2
					2	ENCLOSURE, 582301		2090322	1
					1	P.C. BOARD, 5185893		3471125	1
					ITEM #	DESCRIPTION	REF DES	STOCK NO	QTY

NOTES

1. UNLESS OTHERWISE SPECIFIED RESISTOR VALUES ARE IN OHMS, 1/4W, 10%. CAPACITORS VALUES ARE IN MICROFARADS.
2. P.C. BOARD 5185893.
3. SCHEMATIC 9187194.
4. REMOVE 8-32 SCREW AND INSTALL THREADED CORE AFTER INDUCTORS L2 & L3 HAVE BEEN SOLDERED TO P.C. BOARD.
5. CUT C5 TERMINAL TO 1/8"

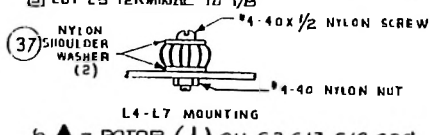

L4-L7 MOUNTING

6 ▲ = ROTOR (↕) ON C3, C13, C18, C20.

MOSELEY ASSOCIATES, INC.
SANTA BARBARA RESEARCH PARK
GOLETA CALIFORNIA 93117

COMPONENT LAYOUT
74-10 1 MHz CONVERTER PCL 50C

SCALE 2X

20208762

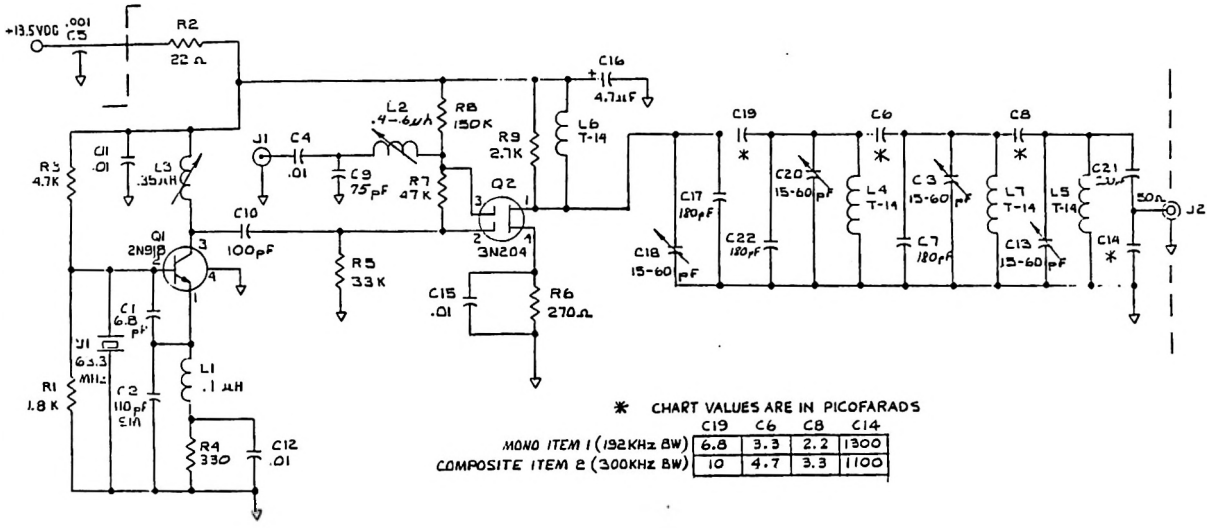

* CHART VALUES ARE IN PICOFARADS

	C19	C6	C8	C14
MONO ITEM 1 (192KHz BW)	6.8	3.3	2.2	1300
COMPOSITE ITEM 2 (300KHz BW)	10	4.7	3.3	1100

NOTES:

1. UNLESS OTHERWISE SPECIFIED
   ALL RESISTOR VALUES ARE IN OHMS, 1/4 W, 10 %
   AND CAPACITOR VALUES ARE IN MICROFARADS.
2. COMPONENT LAYOUT 20B2762
3. P.C. BOARD 51B5803

F	REMOVED C17, C22, C7, C21 VALUES FROM CHART. ECO 3672 10-21-82 S.J.	E	R1 WAS 2.2 K ECO 3520, 5-28-82	D1	C10 WAS 33PF, L1 WAS .22 µH ECO 2072 24 MAR 81	C1	CHG. C17 TO 180pF ECO 3-20-80	B1	L2 WAS .35µH C4 WAS 43 pF ECO 7761, 6-9-80	A	+13.5 VDC WAS -12. ECO 1578 5 FEB 80 D.W.

REVISIONS | DATE | MGMT. APPR.

MOSELEY ASSOCIATES, INC.
SANTA BARBARA RESEARCH PARK
GOLETA, CALIFORNIA 93117

SCHEMATIC
PCL-505 74-10.7 CONVERTER

TOL: FRACT. ± 1/32, .XX ± .030, .XXX ± .010, ∠ ± 1/2°

DWN	A. J. B.	8 OCT 79	SCALE:
CHK	[illegible]	11-2-79	91B7194 F
ENG	[illegible]	11-13-79	

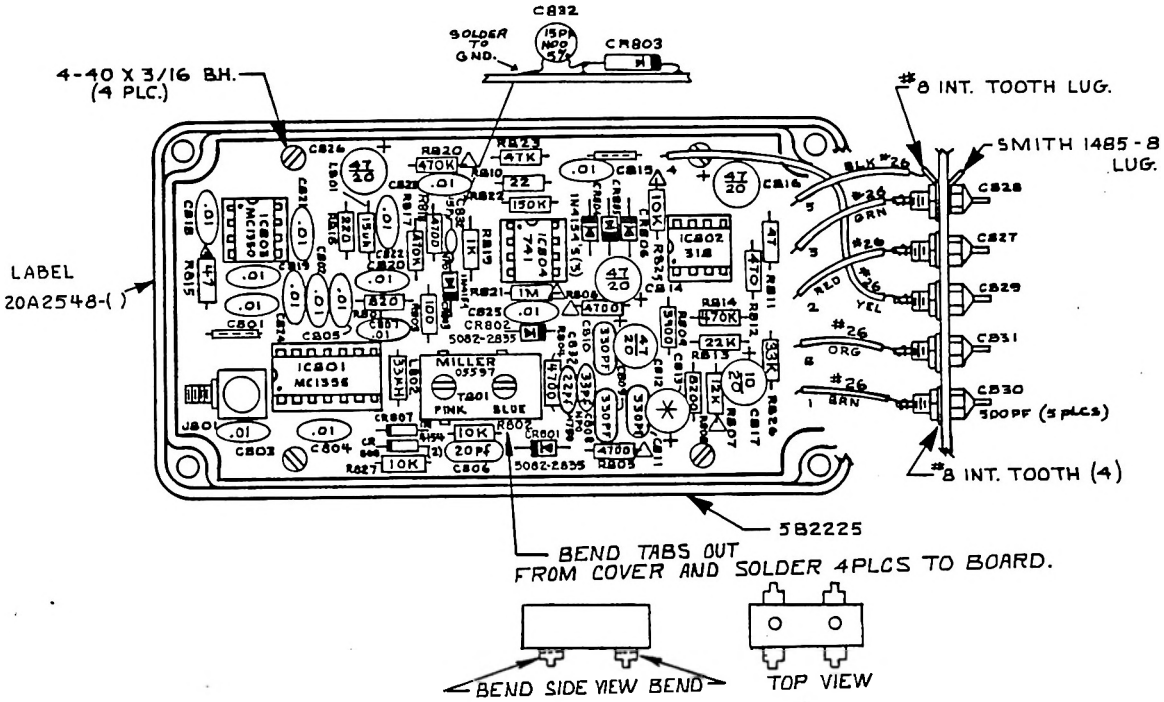

NOTES:

1. UNLESS OTHERWISE SPECIFIED RESISTOR VALUES ARE IN OHMS, 1/4W, 10%. CAPACITOR VALUES ARE IN MICROFARADS.
2. P.C. BOARD 51A5681
3. SCHEMATIC 91B6879
4. △ SOLDER RESISTOR LEADS ON BOTH SIDES OF P.C. BOARD.
5. ✳ FREQUENCY DEPENDENT PARTS

	C813	
ITEM 1	4.7/35	MONAURAL
ITEM 2	47/20	COMPOSITE

	REVISIONS	DATE
L	R826 WAS 47K, AND C828 ECO 2078 24MAR71 CAN	
K	ADDED TAB NOTE AND VIEW. 1 JUL 74 ECO 1150 A.J.B.	
J	C817 WAS 47 UF - ECO 1094. 9 FEB 74 BWF	
I	ADDED CR801 AND CR802 ECO 1 APR 73 F.X.Y.	
H	CR801 & CR802 WIGHT WAS 3/16" 30 DEC 77 F.X.Y.	
G	REPLACE R826 WITH JUMPER. ECO 4096 8 AUG 77 F.X.Y.	
F	REPLACE R826 WITH R827 AND JUMPER. 27 MAR 74 F.X.Y.	
E	ACTUAL REV OF NOTE PARTS TO TOP OF BD STAMPED F.X.Y.	
D	CHANGED PWB PART NO. REF ECO 798 NOW 51A5681 & TYPE 2 WAS 51A5681 29 FEB 76 F.X.Y.	
C	ADD CR801/CR802, RESISTORS R826, C828, C829 & R827 ONLY. ECO 1 APR 73 F.X.Y.	
B	R826 WAS 27K ECO 798 NOV 75 F.X.Y.	
A	R812 WAS 100K & R813 R812 4-24-75 GM	
MGMT. APPR.		

MOSELEY ASSOCIATES, INC.
SANTA BARBARA RESEARCH PARK
GOLETA, CALIFORNIA 93017

COMPONENT LAYOUT
RCVR FM DEMOD 8 MTR AMP

TOL: FRACT. ± 1/32, .XX ± .030, .XXX ± .010, ∠ ± 1/2°

DWN	GM	9-11-75	SCALE: FULL
CHK	FXY	16 SEP 75	20A2548
ENG		9 16 75	

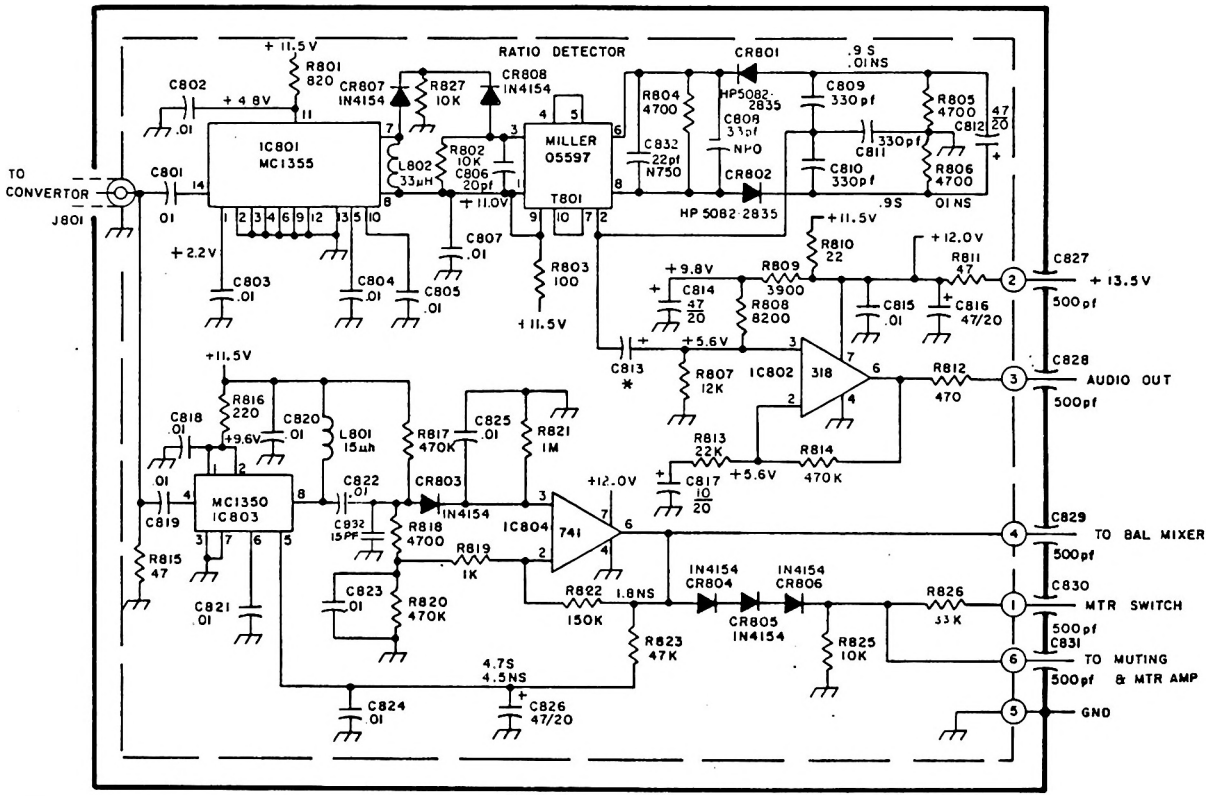

NOTES:

1. UNLESS OTHERWISE SPECIFIED RESISTOR VALUES ARE IN OHMS, 1/4W, 10%. CAPACITOR VALUES ARE IN MICROFARADS.
2. P.C. BOARD 51A5681
3. COMPONENT LAYOUT 20A2548
4. P.C. BOARD SHOWN IN DASHED LINES.
5. NS DENOTES NO SIGNAL (DC VOLTAGE)
   S " MAX. SIGNAL (DC VOLTAGE)
6. * FREQUENCY DEPENDENT PARTS

	C813	
ITEM 1	4.7/35	PCL-505 (MONAURAL)
ITEM 2	47/20	" " (COMPOSITE)

REVISIONS			
1	R826 WAS 33K ADD C832 ECO2072 24 MAR 71 CAH		
C	C817 WAS 47/6V. ECO 1044 12 FEB 73 DWF		
B	INCORPORATED CHANGES NEW PRODUCTION RELEASE ECO 8596		
A	[illegible] ECO 8596 AUG 17 [illegible]		
MGMT. APPR.	DATE		

MOSELEY ASSOCIATES, INC.
SANTA BARBARA RESEARCH PARK
GOLETA, CALIFORNIA 93017

SCHEMATIC
FM DEMOD & MTR AMP

TOL: FRACT. ± 1/32. .XX ± .030. .XXX ± .010. ∠ ± 1/2°

DWN	JHM	24 DEC 75	SCALE: NONE
CHK			
ENG	[illegible] 12 Jan 76		91 B 6879 D0

ITEM 1 - ADD C915 (MONAURAL)
ITEM 2 - # 22 BUS JUMPER (COMPOSITE)

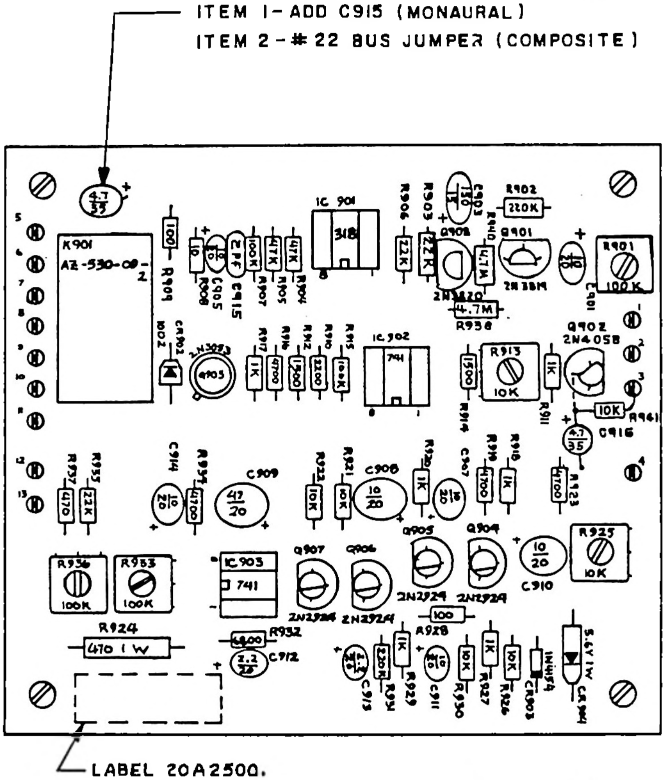

LABEL 20A2500.

NOTES:

1. UNLESS OTHERWISE SPECIFIED, ALL RESISTOR VALUES ARE IN OHMS, 1/4, 10%. CAPACITOR VALUES ARE IN MICROFARADS.
2. P.C. BOARD 51A 5625
3. SCHEMATIC 91 B 6734

REVISIONS		DATE
K1	C915 C916 & R941 ADDED ECO1771 30JUN88 D.T.W.	
J1	R909 MOVED TO MATCH HOLES IN P.C. BOARD PCO1353 31AUG79 D.T.W.	
J	ROTATE TRANSISTORS Q908, Q901 7 SEPT. 78 ALS	
I	P.C. BOARD REV 02. ADDED Q908 AND R940 TO TOP SIDE OF BD. 31MAR78 SAM	
H	ADD Q908 & R940. REMOVE R939, C904, C916 & CR905. R938 WAS 2.2M. ECO 911. 9 DEC77 F.X.Y.	
G	ADD R935, C916, & CR905. ECO 844 19OCT76 F.X.Y.	
F	ARTWORK REV 01 FOR C916 REF. ECO 758 24JAN76 F.X.Y	
E	R918 WAS 820K 11FEB76 ECO784 L.I.	
D	CHGD. R918 WAS CR901 1N4154, R914 WAS 22K & R912 WAS 27K, DELETE C902 PER E.C.O. 719 RM	
C	ADD ITEMS 1 & 2 ECO 736 23SEP75 F.X.Y.	
B	CHANGE IC 901 - 748 to 3?0 PER ECO 739 14 MAY 75 JHM	
A	Q901 & Q902 ORIENTATION CORRECTED KF 9JAN75	
MGMT. APPR.		

MOSELEY ASSOCIATES, INC.
SANTA BARBARA RESEARCH PARK
GOLETA, CALIFORNIA 93017

COMPONENT LAYOUT
RCVR MUTING & METERING AMPLIFIER

TOL: FRACT. ± 1/32, .XX ± .030, .XXX ± .010, ∠ ± 1/2°

DWN	KF	11/NOV/74	SCALE: FULL	
CHK	L.I.	19NOV74	20A 2500	K1
ENG	SLM	19NOV74		

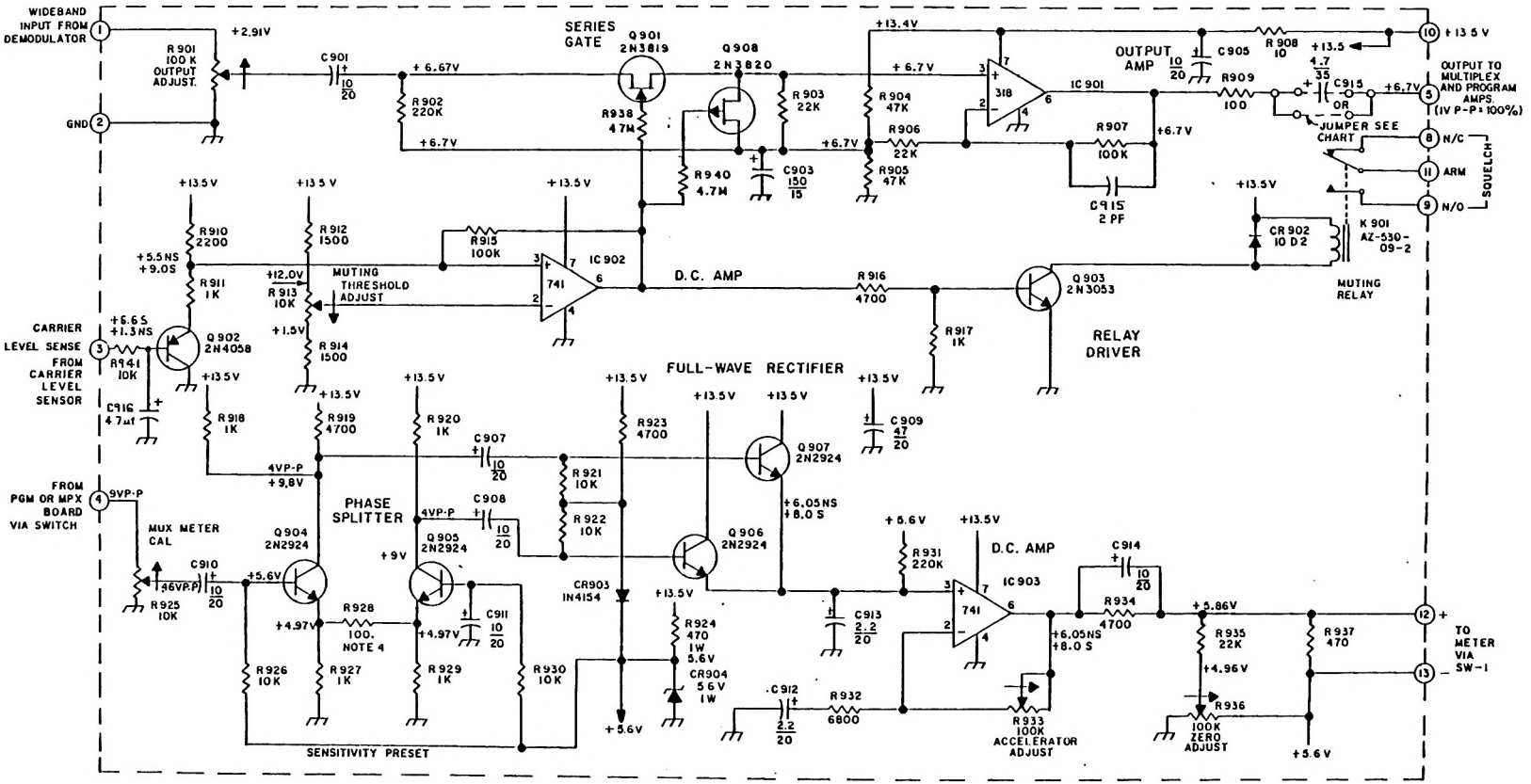

NOTES:

1. UNLESS OTHERWISE SPECIFIED RESISTOR VALUE ARE IN OHMS, 1/4 W, 10%. CAPACITOR VALUES ARE IN MICROFARADS.
2. P.C. BOARD 51A5625
3. COMPONENT LAYOUT 20A2500
4. SENSITIVITY PRESET 100 OHMS NOMINAL.
5. NS DENOTES NO SIGNAL (DC VOLTAGE)
6. S DENOTES MAX SIGNAL (DC VOLTAGE)

	C915
ITEM 1 MONO	4.7/35
ITEM 2 COMPOSITE	JUMPER

MOSELEY ASSOCIATES, INC.
SANTA BARBARA RESEARCH PARK
GOLETA, CALIFORNIA 93017

SCHEMATIC
RCVR. MUTING & METERING AMPLIFIER

TOL: FRACT. ± 1/32, .XX ± .030, .XXX ± .010, ∠ ± 1/2°

REVISIONS	DATE	MGMT. APPR.
D	R941, C915 & C916 ADDED. ECO 1771	D.T.M.
C	ADDED R938, R940, Q908; CHANGE R937	[illegible]
B	ADDED R933, C915 & CR904. ECO 1800	10 OCT 76 F.I.Y.
A	[illegible]	[illegible]

DWN	JHM	12 JAN 76	SCALE:
CHK			91B6734
ENG		12 Jan 76	U0

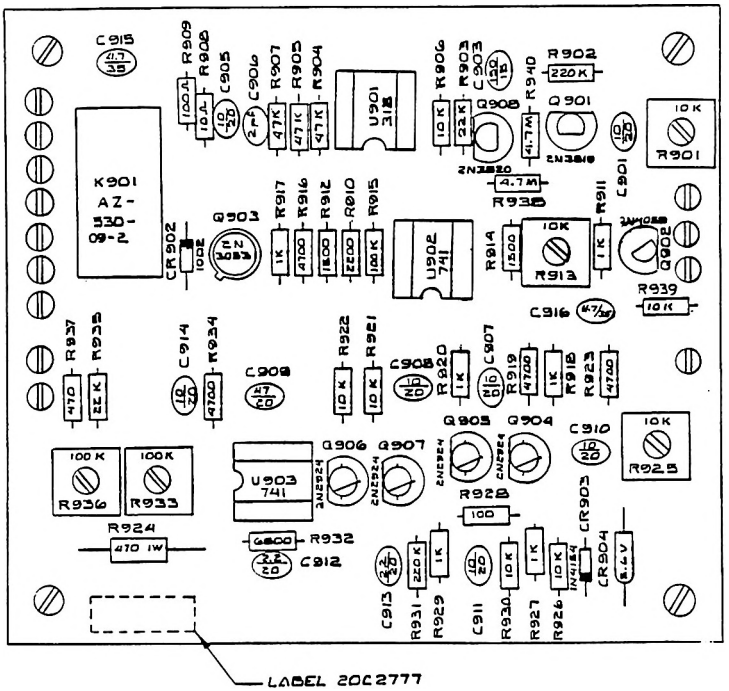

NOTES:

1. UNLESS OTHERWISE SPECIFIED, ALL RESISTOR VALUES ARE IN OHMS, 1/4, 10% CAPACITOR VALUES ARE IN MICROFARADS.
2. P.C. BOARD 51C5904-10
3. SCHEMATIC 9187211
4. SILK SCREEN WITH WHITE INK COMPONENT SIDE 51C5904-40
5. SOLDER MASK CIRCUIT SIDE 51C5904-30.

ITEM	DESCRIPTION	REF. DES.	STOCK NO.	QTY
21	CAPACITOR 150/15	C903	4280178	1
20	CAPACITOR 47/20	C909	08-518	1
19	CAPACITOR 4.7/35	C916	4280053	1
18	CAPACITOR 10/20	905, 907, 908, 910, 911, 914, 901	4280079	7
17	CAPACITOR 4.7/35	C915	4280053	1
16	CAPACITOR 2.2/20	C912, C913	4280046	2
15	CAPACITOR 2 pF	C906	4210027	1
14				
13	IC 318	U901	3730173	1
12	IC 741	U902, U903	3660008	2
11	TRANS. 2N4058	Q902	3630209	1
10	TRANS. 2N3819	Q901	3630159	1
9	TRANS. 2N3053	Q903	3630035	1
8	TRANS. 2N2924	Q904, 905, 906, 907	3630027	4
7	RELAY AZ-530-09-2	K901	3270113	1
6	POT 100K	R936 R933	4630513	2
5	POT 10K	R913 R901 R925	4630291	3
4	I.C. SOCKET	U1-U3	3250016	3
3	SOCKET TRANSISTOR	Q901, Q902, Q904-Q908	3250230	7
2	TERMINALS	USECO 2520 B4/9	REF	—
1	P.C. BOARD	51C5904-10	3472255	1

ITEM	DESCRIPTION	REF. DES.	STOCK NO.	QTY
41	TRANSISTOR 2N3820	Q908	[illegible]	1
40	RESISTOR 4.7M	R938 R940	[illegible]	2
39	DIODE 5.6V, 1W	CR904	3600186	1
38	DIODE 1N4154	CR903	3600145	1
37	DIODE 1002	CR902	3600003	1
36	RESISTOR 10	R908	4410023	1
35	RESISTOR 220K	R931 R902	4410536	2
34	RESISTOR 100	R928, 909	4410122	2
33	RESISTOR 47K	904 905 907	4410452	3
32	RESISTOR 1500	R912 R914	4410262	2
31	RESISTOR 22K	R903 R938	4410411	2
30	RESISTOR 10K	935 936 921 922 926 930	4410379	6
29	RESISTOR 1K	911 917 921 918 920 924	4410247	6
28	RESISTOR 6800	R932	4410363	1
27	RESISTOR 4700	916 923 934 919	4410338	4
26	RESISTOR 2200	R910	4410163	1
25	RESISTOR 470	R937	4410577	1
24	RESISTOR 100K	R915	4410494	1
23	RESISTOR 470 1W	R924	4430062	1
22				

MOSELEY ASSOCIATES, INC.
SANTA BARBARA, CALIFORNIA

COMPONENT LAYOUT
RCVR MUTING & METERING AMP

20C2777 | A1

K 5904-30 SIMILAR TO
K 5904-30-110 A.S.A.
K 5904-30-110 D.O.D.
RELEASED FOR PROD.
ECO 1832 & ECO 1840
DRAWN D.T.W.

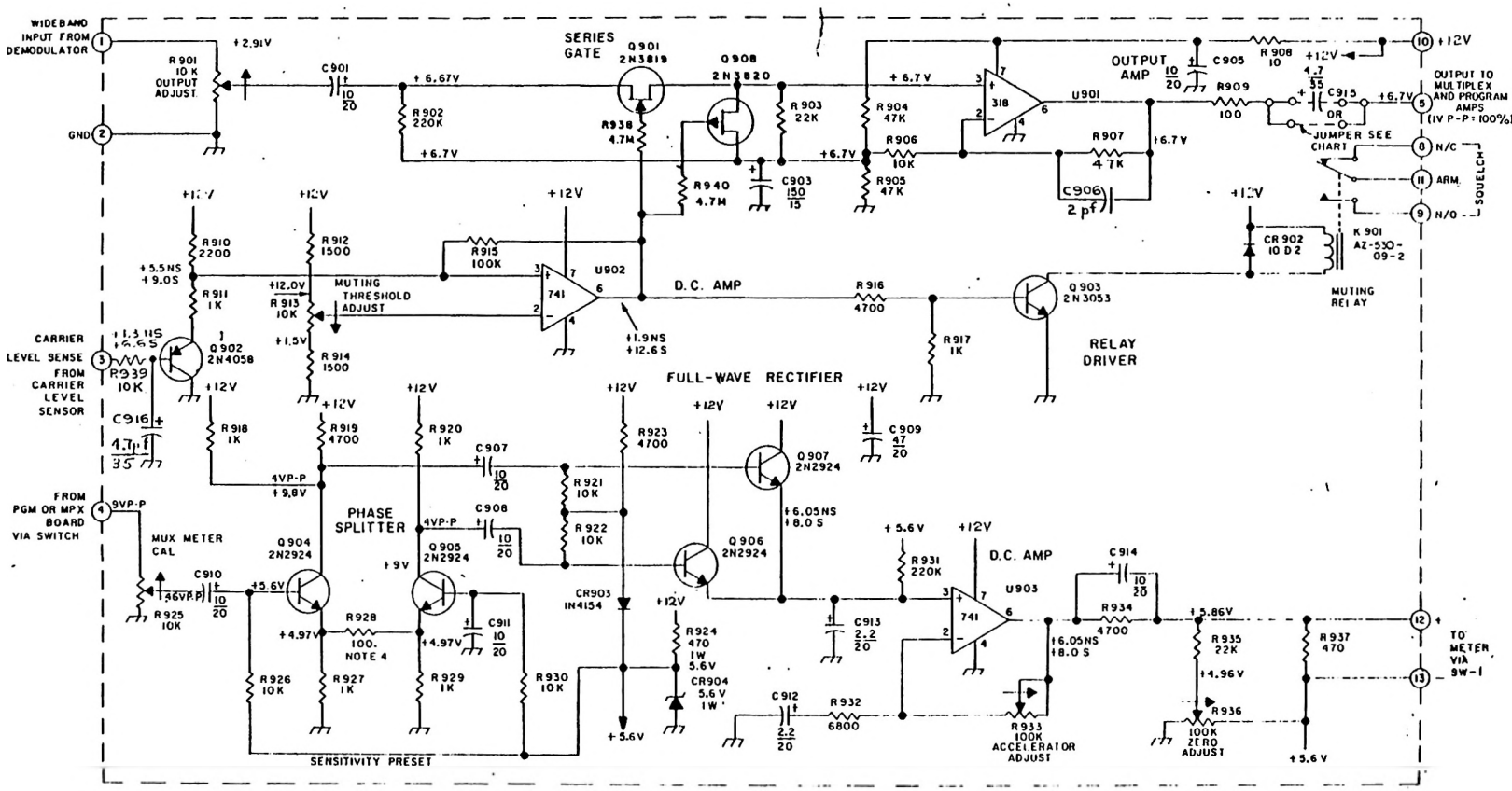

NOTES:

1. UNLESS OTHERWISE SPECIFIED RESISTOR VALUE ARE IN OHMS, 1/4 W, 10%. CAPACITOR VALUES ARE IN MICROFARADS
2. P.C. BOARD 51C5904
3. COMPONENT LAYOUT 20C2777
4. SENSITIVITY PRESET 100 OHMS NOMINAL
5. NS DENOTES NO SIGNAL (DC VOLTAGE)
6. S DENOTES MAX SIGNAL (DC VOLTAGE)

	C915
ITEM 1 MONO	4.7/35
ITEM 2 COMPOSITE	JUMPER

MOSELEY ASSOCIATES, INC.
SANTA BARBARA RESEARCH PARK
GOLETA, CALIFORNIA

SCHEMATIC
RCVR MUTING & METERING AMPLIFIER

DWN
CHK
ENG GAS
SCALE
91B7211 A

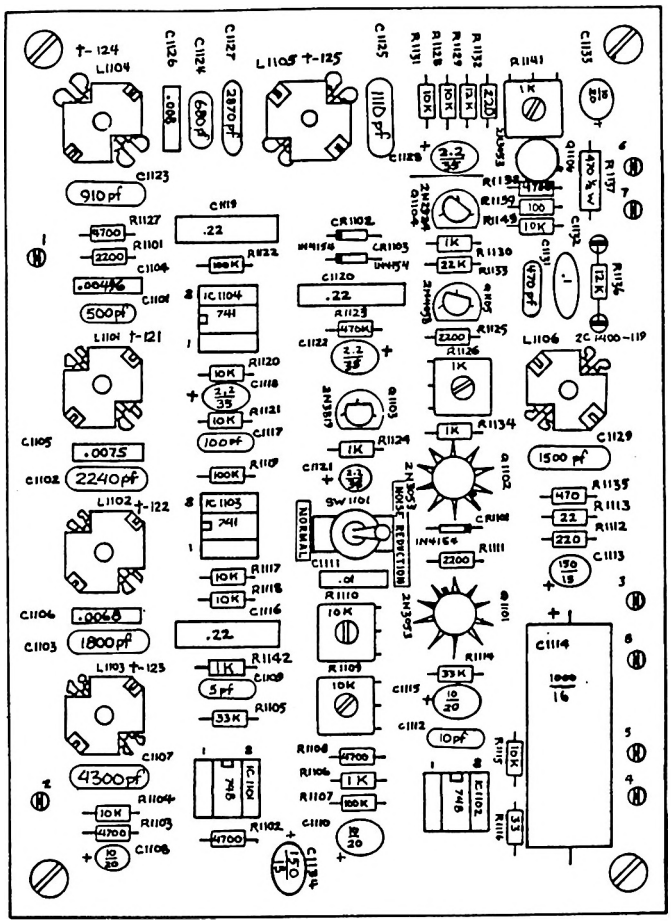

NOTES:

1. UNLESS OTHEWISE SPECIFIED RESISTOR VALUES ARE IN OHMS, 1/4 W, 10% CAPACITOR VALUES ARE IN MICROFARADS.
2. P.C. BOARD 51A5627, REV.
3. SCHEMATIC 91 B 6787
4. † - DENOTES 2C1400 - ( ) INDUCTOR

REVISIONS		DATE
E	R1138 WAS 10K ECO 828 30MAR77 JM	
D	CHANGED TO 1N4154 ECO 828	
C	R1128 WAS 470K, ECO 768 1NOV75 F.X.Y.	
B	R1106 WAS 3600 15APR75 F.X.Y.	
A	R1132 WAS 1K. ADD R1142 @ 1K AND C1109 @ 150/5 AF 5127175	

MGMT. APPR.

MOSELEY ASSOCIATES, INC.
SANTA BARBARA RESEARCH PARK
GOLETA, CALIFORNIA 93017

COMPONENT LAYOUT
PGM & MUX OUTPUT AMPS (MONO RCVR)

TOL: FRACT. ± 1/32, .XX ± .030, .XXX ± .010, ∠ ± 1/2°

DWN	KF	9 DEC 74	SCALE: FULL
CHK	F X Y	9 DEC 74	20A2496
ENG	S L M	10 DEC 74	E

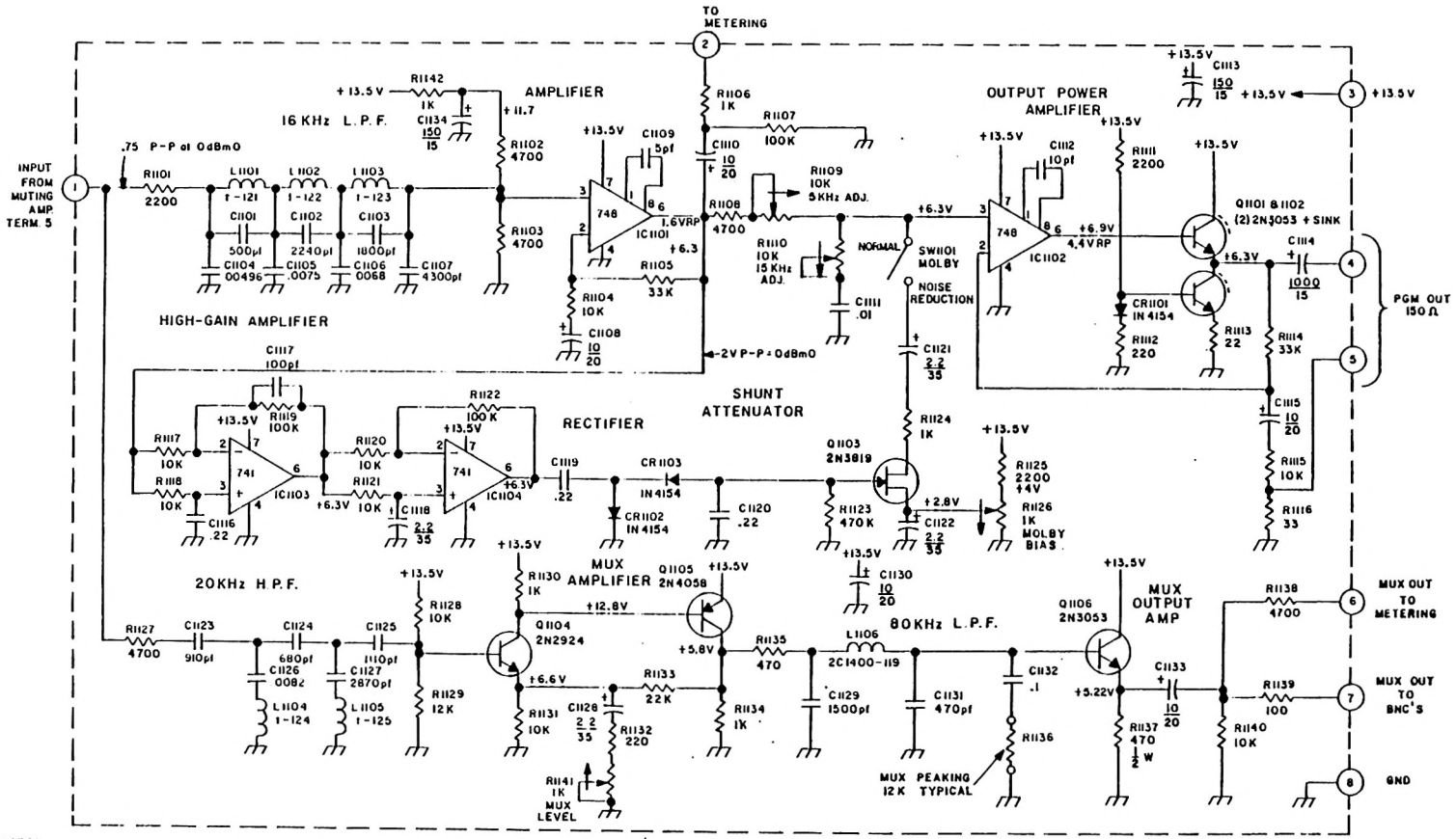

NOTES:

1. UNLESS OTHEWISE SPECIFIED ALL RESISTOR VALUES ARE IN OHMS, 1/4 W, 10% AND CAPACITOR VALUES ARE IN MICROFARADS
2. P.C. BOARD 51A5627
3. COMPONENT LAYOUT 20A2496
4. 1 - DENOTES 2C1400 – ( ) INDUCTOR

MOSELEY ASSOCIATES, INC.
SANTA BARBARA RESEARCH PARK
GOLETA, CALIFORNIA 93117

SCHEMATIC
PGM & MUX OUTPUT AMPS (MONO RCVR)

DWN JHM 13 JAN 76
CHK
ENG
SCALE:
91B6787 A

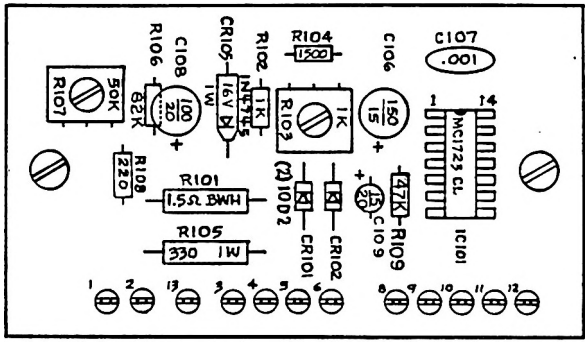

NOTES:

1. UNLESS OTHERWISE SPECIFIED RESISTOR VALUES ARE IN OHMS, 1/4 W, 10 %. CAPACITOR VALUES ARE IN MICROFARADS.
2. P C BOARDS 81 A 5885
3. SCHEMATIC 91 A 6721

H	ADDED R109 & C109 19 JULY 78 ECO 947 T.T.	
G	R104 WAS 100K. ECO 904 7 OCT 72 F.X.Y.	
F	REMOVE CR103 & CR104 PER ECO 857 3-6-77 JAM	
E	CHANGE REFERENCE NO.	
D	ARTWORK REV. & ADDED PADS FOR R108. 12-17-73 GM	
C	JHM 28 OCT 76 ADD R108 PER ECO 745	
B	R106 WAS 120K ECO 744. 9-18-75 GM	
A	DELETE R108 CHG R104, R107 PER ECO 739 14 MAR 75 JHM	
	REVISIONS	DATE
	MGMT. APPR.	

MOSELEY ASSOCIATES, INC.
SANTA BARBARA RESEARCH PARK
GOLETA, CALIFORNIA 93017

COMPONENT LAYOUT
RCVR. PWR. SUPPLY REGULATOR BOARD

TOL: FRACT. ± 1/32, .XX ± .030, .XXX ± .010, ∠ ± 1/2°

DWN	JHM	5-6-74	SCALE:
CHK	FXY	7 NOV 74	20A 2451
ENG	[illegible]	[illegible]	

H

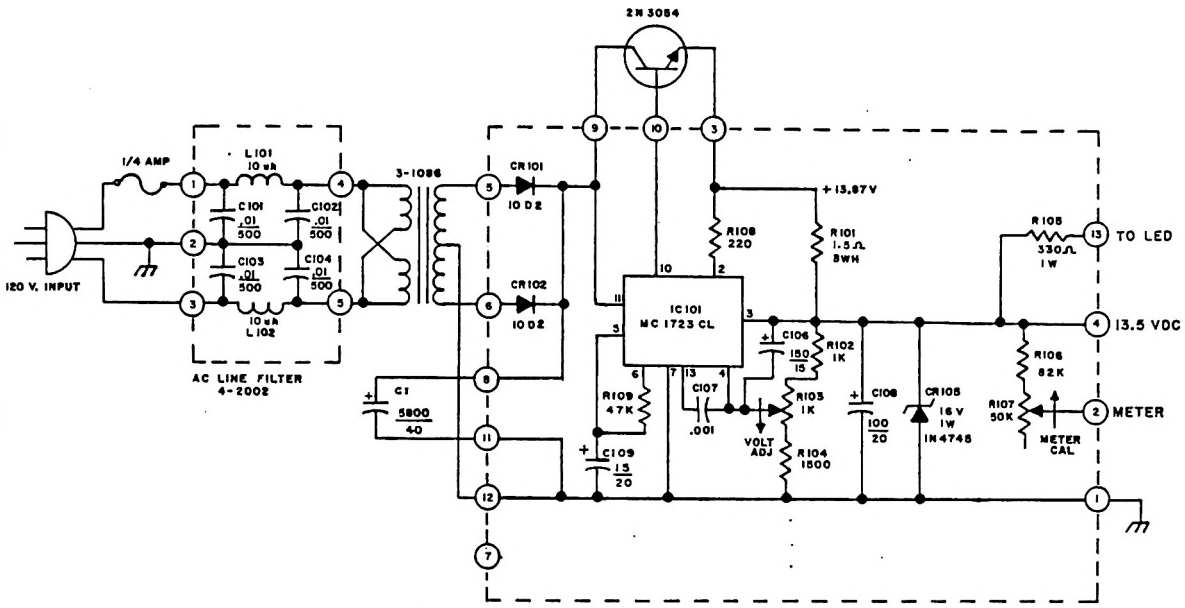

NOTES:

1. UNLESS OTHERWISE SPECIFIED RESISTOR VALUES ARE IN OHMS, 1/4 W, 10%. CAPACITOR VALUES ARE IN MICROFARADS.
2. P C BOARD 81A 5888
3. COMPONENT LAYOUT 20A2481
4. PARTS OUTSIDE P.C. BOARD ARE SHOWN FOR REFERENCE ONLY. SEE RECEIVER SCHEMATIC.

REVISIONS		DATE	MGMT. APPR.
D	CR WAS 3700 / 88 X APR. 74 ECO 2[illegible] A.J.B.		
C	ADDED C105 & R109 15 JULY 74 ECO 947 L.J.		
B	R106 WAS 100K. ECO 904 7 OCT 77 [illegible]		
A	REMOVE CR103 & CR104 ECO 867 31 OCT 77 MAXWELL		

MOSELEY ASSOCIATES, INC.
SANTA BARBARA RESEARCH PARK
GOLETA, CALIFORNIA 93017

SCHEMATIC
RCVR. PWR. SUPPLY REGULATOR BOARD

TOL: FRACT. ± 1/32.	.XX ± .030.	.XXX ± .010.	∠ ± 1/2°	
DWN JHM	12 JAN 76	SCALE:		
CHK		91A6721		D
ENG	12 JAN 76			

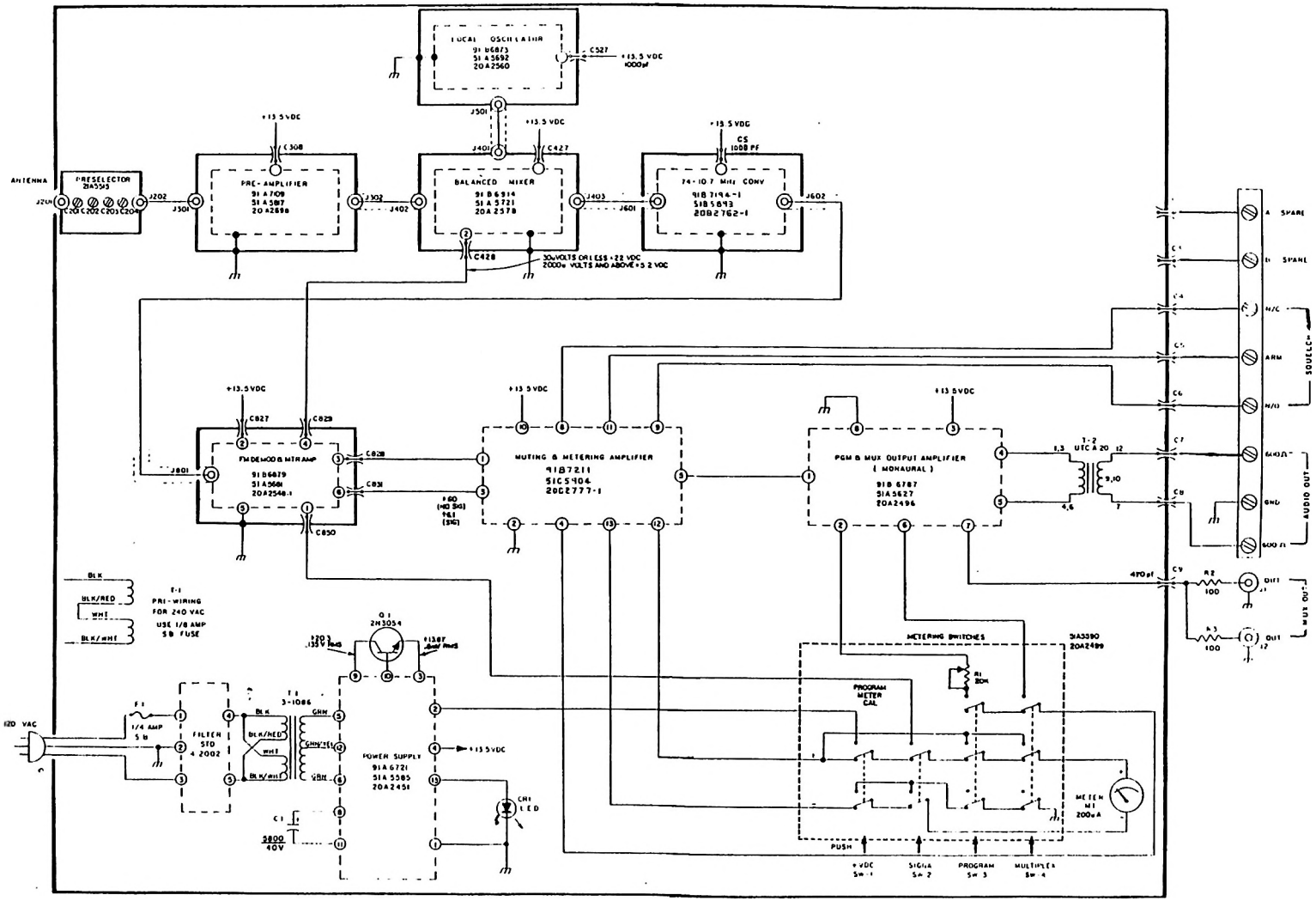

NOTES:

1. P.C. BOARDS ARE SHOWN IN DASH LINES
   91 PREFIX IS SCHEMATIC DWG. NUMBER.
   20 PREFIX IS MODULE NUMBER.
   51 PREFIX IS P.C. BOARD NUMBER.

91C7120 CØ

SCHEMATIC
PCL-505 960 MHz RECEIVER (MONAURAL)

PARENT ITEM NO 9050337

SPARE PTS PCL-505CC 890-960MHZSP-30B F

DATE 4/22/81

MOSELEY ASSOCIATES INC
111 CASTILIAN DRIVE
GOLETA CA 93117
805 968-9621

COMPONENT ITEM NO.	STOCK LOCA	MANUFACTURER PART NUMBER	COMPONENT DESCRIPTION	QUANTITY PER	UM	UNIT SALES PRICE	TOTAL SALES PRICE
3390150	2722	MV-5254	LED GREEN	1	EA	1.37	1.37
3600145	2721	1N4154	DIO 1N4154 25V 4NS SI DO35	2	EA	.16	.32
3600160	2744	1N4731A	DIO Z1N4731A 4.3V 1W 5% AIAY	1	EA	1.26	1.26
3600178	2744	1N4733A	DIO Z1N4733A 5.1V 1W 5% AIAY	1	EA	1.09	1.09
3600186	2744	1N4734A	DIO Z1N4734A 5.6V 1W 5% AIAY	1	EA	1.26	1.26
3600236	2744	1N4745A	DIO Z1N4745A 16V 1W 5% AIAY	1	EA	.42	.42
3610003	2721	1002	DIO 1002 200V 1A SI DO39	4	EA	.39	1.56
3610045	2744	5082-2835	DIO 5082-2835 FAST	1	EA	2.24	2.24
3610094	2721	MDA-980-2	DIO MDA-980-2 100V BRIDGE 12A	1	EA	7.11	7.11
3610136	2744	MV-840	DIO VMV-840 030V 90-100PF DO7	1	EA	3.33	3.33
3630027	2721	2N2924LFS	XT NS2N2924LFS.2W160M025V.1A7P	2	EA	.54	1.08
3630035	2721	2N3053	XT NP2N3053 05W100M080V.7A	1	EA	1.47	1.47
3630043	2721	2N3054	XT NP2N3054 25W030K090V02A	1	EA	2.80	2.80
3630076	2744	2N3563	XT NS2N3563 .2W600M030V50M2P	1	EA	.49	.49
3630092	2744	2N3640	XT PS2N3640 .2W500M012V80M3.5P	1	EA	2.28	2.28
3630159	2744	2N3819	XT NF2N3819 .4W 025V20M	1	EA	.74	.74
3630167	2744	2N3820	XT PF2N3820 .4W 020V15M	1	EA	1.51	1.51
3630191	2744	2N4037	XT PP2N4037 01W060M060V01A	1	EA	1.54	1.54
3630209	2744	2N4058	XT PS2N4058 .4W 030V30M	1	EA	.46	.46
3630241	2744	2N4428	XT NP2N4428 3.5W750M055V.42A	1	EA	4.94	4.94
3630308	2721	2N5179	XT NS2N5179 .2W900M020V50M1P	1	EA	2.38	2.38
3630316	2744	2N5293	XT NP2N5293 36W800K080V04A	1	EA	1.73	1.73

PARENT ITEM NO 9050337

SPARE PTS PCL-505CC 890-960MHZSP-38B F DATE 4/22/81 PAGE 2

MOSELEY ASSOCIATES INC
111 CASTILIAN DRIVE
GOLETA CA 93117
805 968-9621

COMPONENT ITEM NO.	STOCK LOCA	MANUFACTURER PART NUMBER	COMPONENT DESCRIPTION	QUANTITY PER	UM	UNIT SALES PRICE	TOTAL SALES PRICE
3630399	2743	3N140	XT NF3N140 .4W 020V50M	1	EA	4.17	4.17
3640018	2744	A-400	XT NSA400 .2W0056015V25M	1	EA	6.62	6.62
3640109	2744	D1-12B	XT NPD1-12B 5.8W866M036V.25A	1	EA	21.18	21.18
3640133	2744	DM5-12B	XT NPDM5-12B 29W 036V02A	1	EA	49.70	49.70
3640141	2744	DM10-12B	XT NPDM10-12B 50W 036V04A	1	EA	71.05	71.05
3640182	2713	MJ-2955	XT PPMJ2955 115W2.5M060V15A	1	EA	2.52	2.52
3650116	2743	MC1723CL	RGLTR TYPE 1723 VARV .15A 632	2	EA	2.66	5.32
3660008	2812	SN72741P	IC UA741P OPAMP GEN COMP	1	EA	.83	.83
3660024	2743	SN72748P	IC UA748P OPAMP UNCOMP	1	EA	1.19	1.19
3660297	2743	SN7486N	IC SN7486N QU 2I EXCL OR	1	EA	1.02	1.02
3680170	2713	SCL4020AE	IC SCL4020AE 14 STAGE BIN CT	1	EA	3.50	3.50
3730173	2743	LM-318N	IC LM318N OPAMP HISPEED	1	EA	6.48	6.48
3730199	2743	LM-324N	IC LM324N OPAMP SNGL SUPL	1	EA	1.68	1.68
3730322	2743	MC1350P	IC MC1350P OPAMP	1	EA	2.63	2.63
3730348	2743	MC1355P	IC MC1355P AMP FM/IF	1	EA	3.85	3.85
3730389	2743	MC1590G	IC MC1590G AMP VIDEO	1	EA	16.28	16.28

TOTAL PRICE 239.40

PARENT ITEM NO 9050949

OPT S/P KIT PCL-505 890-960 SP-388 F DATE 4/22/81 PAGE 1

MOSELEY ASSOCIATES INC
111 CASTILIAN DRIVE
GOLETA CA 93117
805 968-9621

COMPONENT ITEM NO.	STOCK LOCA	MANUFACTURER PART NUMBER	COMPONENT DESCRIPTION	QUANTITY PER	UM	UNIT SALES PRICE	TOTAL SALES PRICE
3270113	2721	AZ-530-09-2	RELAY MIN PC 200OHM 12V NOH	1	EA	6.41	6.41
3370228	2735	MDL 1/4	FUSE	5	EA	1.53	7.65
3370269	2735	MDL 1 1/2	FUSE	5	EA	1.79	8.95
4090007	2024	A-20	XFMR	1	EA	53.74	53.74
4090015	2024	SAT-109	XFMR	1	EA	43.34	43.34
4090254	2022	3-1079B	XFMR 8-P-69B	1	EA	51.31	51.31
4090312	2024	3-1086	XFMR	1	EA	18.48	18.48
4260204	2731	TVA-1163	CAP HI-TEMP 1000/16V	1	EA	2.79	2.79
4270039	2723	360272G025AA2A	CAP PWR LYTIC 2700/25V	1	EA	5.81	5.81
4270088	2723	360X902G025AB2A	CAP PWR LYTIC 9000/25V	1	EA	7.98	7.98
9100033	2214	21A2493 B	XTAL OVEN MOD XMTR PCL-505	1	EA	35.00	35.00

TOTAL PRICE 241.46

PARENT ITEM NO 9051426

OPT S/P KIT PCL-505C 890-960 SP-38B F DATE 4/22/81 PAGE 1

MOSELEY ASSOCIATES INC
111 CASTILIAN DRIVE
GOLETA CA 93117
805 968-9621

COMPONENT ITEM NO.	STOCK LOCA	MANUFACTURER PART NUMBER	COMPONENT DESCRIPTION	QUANTITY PER	UM	UNIT SALES PRICE	TOTAL SALES PRICE
3270113	2721	AZ-530-09-2	RELAY MIN PC 200OHM 12V NOM	1	EA	6.41	6.41
3370228	2735	MDL 1/4	FUSE	5	EA	1.53	7.65
3370269	2735	MDL 1 1/2	FUSE	5	EA	1.79	8.95
4090254	2022	3-1079B	XFMR 8-P-69B	1	EA	51.31	51.31
4090312	2024	3-1086	XFMR	1	EA	18.48	18.48
4260204	2731	TVA-1163	CAP HI-TEMP 1000/16V	1	EA	2.79	2.79
4270039	2723	36D272G025AA2A	CAP PWR LYTIC 2700/25V	1	EA	5.81	5.81
4270088	2723	36DX902G025AB2A	CAP PWR LYTIC 9000/25V	1	EA	7.98	7.98
9100033	2214	21A2493 B	XTAL OVEN MOD XMTR PCL-505	1	EA	35.00	35.00

TOTAL PRICE 144.38

PARENT ITEM NO 9051228

OPT CRYS PCL-505CC @890-960MHZSP-38B F DATE 4/22/81 PAGE 1

MOSELEY ASSOCIATES INC
111 CASTILIAN DRIVE
GOLETA CA 93117
805 968-9621

COMPONENT ITEM NO.	STOCK LOCA	MANUFACTURER PART NUMBER		COMPONENT DESCRIPTION	QUANTITY PER	UM	UNIT SALES PRICE	TOTAL SALES PRICE
3340106	2734	30A0042	B	XTAL 63.3 MHZ PCL-505/PCL-101	1	EA	37.50	37.50
3340478	9600	30A0034	B	XTAL RX 890-960 MHZ PCL505/101	1	EA	37.50	37.50
3340486	9600	30A0035		XTAL TX 947-952 MHZ PCL-505	1	EA	37.50	37.50

TOTAL PRICE 112.50

MOSELEY ASSOCIATES, INC.

FINAL TEST DATA

MODEL PCL-505

Date 17 Aug. 1983
Order # 3392
Technician Conrad

Customer KHYX
Tx Serial # 39225
Rx Serial # 40699
Frequency 950.125 MHz

Transmitter Meter Readings

Program	0	dB top
MPX Chan. 1 @ 26 kHz	10	bottom
Chan. 2 @ 67 kHz	15	bottom
AFC	15	bottom
FRD PWR 6.0 Watts	0	top
RFL PWR	0	bottom
+VDC	12.5	bottom
Reference Oscillator	14.5	bottom
H.F. Divider	13.0	bottom
I.P.A. Drive	20.5	bottom
Final Current 2 amp max	11.5	bottom

Power Supply to be set using a DVM

Transmitter	12.5	VDC
Receiver	12.5	VDC

Receiver Meter Readings

+VDC	12.5	bottom
Signal (no input)	1.8	bottom
Program @ 100% mod.	0	dB
MPX 26 kHz	10	bottom
67 kHz	15.9	bottom
Level for 45 dB SNR:	-90	dBm

RF P_o Levels

FMO	25	15 MW min
MULT-DRIV	180	120 MW min
FINAL AMP	6.0	5 W min

PCL-505 System Performance

Freq. (Hz)	Response	Distortion (%)
30	- .4 dB	.21
50	- .4 dB	.13
400	0 dB	.07
1,000	0 ref	.05
5,000	0 dB	.07
10,000	+ .3 dB	.06
15,000	0 dB	.08

Receiver Signal Meter Calibration

Microvolts	
5	1.8
10	1.9
20	2.5
50	7.0
100	9.1
200	11.0
500	13.0
1,000	14.0
1,500	14.0

System Noise

Ultimate SNR: 74 dB
SNR: 82 dB with noise reduction circuit active
Level for 60 dB SNR: -82 dBm
Squelch set between 15-20 20 µV

These readings were noted during final electrical test of the equipment and are intended for reference purposes. Readings may vary with component replacement or aging, adjustment, RF terminations, equipment installation, or path conditions.

Rev. 12 May 1983
ph