Moseley

User Manual

SL9003Q
Digital Studio Transmitter Link

Doc. 602-12016-01
Revision B

Released August 1998

Kevin Winn (805) 252-2133

Moseley

Mosely
Associates
Incorporated

111 Castillian Drive
Santa Barbara, CA 93117-3093
U.S.A.

Phone: 805-968-9621
Fax: 805-685-9638 or 805-968-2787
Internet: http://www.moseleysb.com

SL9003Q Manual Dwg # 602-12016-01 R: B; Revision Levels:

SECTION	DWG	REV	ECO	REVISED/ RELEASED
Table of Contents	602-12016-TC1	B	DCO1065	August 1998
1	602-12016-11	B	DCO1065	August 1998
2	602-12016-21	B	DCO1065	August 1998
3	602-12016-31	B	DCO1065	August 1998
4	602-12016-41	B	DCO1065	August 1998
5	602-12016-51	B	DCO1065	August 1998
6	602-12016-61	B	DCO1065	August 1998
7	602-12016-71	B	DCO1065	August 1998
Appendix	602-12016-A1	B	DCO1065	August 1998

Table of Contents

Continued on following page...

Continued on following page...

Continued on following page...

Continued on following page...

List of Figures

List of Tables

When all else fails...

READ THE MANUAL!

Section 1 System Features and Specifications
A short discussion of the SL9003Q features and specifications.

Section 2 Quick Start
For the experienced user that wants to get the system up and running as soon as possible. Contains:

- Foldout Figures 2-2 (TX) and 2-3 (RX) show typical rear panel interconnections
- Typical audio settings, RF parameters, and performance check

Section 3 Installation
Detailed system installation information covering:

- Primary power requirements (AC/DC)
- Bench test details (for initial pretest)
- Site installation details (environmental, rack mount and link alignment)

Section 4 Operation
Reference section for front panel controls, LED indicators, LCD screen displays and software functions:

- Front panel controls & indicators
- Screen Menu Structure – menu tree, navigation techniques
- Screen Summary Tables – tables of information showing parameters & detailed functions.

Section 5 Module Configuration
Listings of jumpers, settings and options useful for diagnosis and custom systems:

- Module configuration
- Troubleshooting guide

Section 6 Customer Service
Information to obtain customer assistance from the factory.

Section 7 System Information
System theory discussion for a better understanding of the SL9003Q:

- System Block Diagrams
- Module Details and Block Diagrams

Appendices
Additional material for reference and design. These include:

- Path Evaluation Information
- Audio Considerations
- Glossary of Terms
- Conversion Chart (microvolts to dBm)
- Spectral Emission Masks

Section 1

System Features and Specifications

1.1 System Introduction

The Moseley STARLINK 9000 is the first all-digital, open-architecture, modular system for CD-quality audio transmission. The versatility and power of the STARLINK 9000 come from a complete range of "plug and play" personality modules.

The SL9003Q Digital Studio-Transmitter Link (DSTL) system is a transmitter/receiver pair that conveys high quality digital audio across a microwave radio path. Typically, program material is transmitted from a studio site to a remote transmitter site, or to a repeater site. Utilizing spectrally efficient Quadrature Amplitude Modulation (QAM) technology, the SL9003Q delivers four 16-bit linear audio channels and two data channels over a standard 950 MHz STL frequency assignment and is spectrally compatible with existing FCC Part 74 frequency allocations.

AES/EBU digital audio I/O, combined with a built-in variable sample rate converter, provide seamless connection to the all-digital air chain without compression. Plug-in MPEG audio modules and a digital multiplex allow for additional program, voice, FSK, async and sync data channels.

The high spectral efficiency of the SL9003Q is achieved by user-selectable 16, 32 or 64 QAM. Powerful Reed-Solomon error correction, coupled with a 20-tap adaptive equalizer, provide unsurpassed signal robustness in hostile RF enrivonments. An ultra-linear 1 Watt average transmit power is achieved with redundant RF power hybrid modules.

The system also has provisions for two asynchronous auxiliary data channels (up to 38,400 baud) that are used for communication in remote control applications.

1.2 System Features

In addition to establishing a new industry standard for studio-transmitter link performance, the SL9003Q incorporates many new and innovative features, including:

- Linear 16 bit digital audio performance.
- Higher system gain, 26 dB more than composite STL.
- Degradation-free multiple hops.
- Configurable for up to 4 linear audio program channels per STL system.
- No crosstalk between channels.
- No background chatter from co-channel or adjacent-channel interference.
- Built-in AES/EBU digital audio interface.
- Operation through fractional T1 networks.
- Built-in data channels alleviate the need for FM subcarrier data channels.
- Extensive LCD screen status monitoring.

- Peak-reading LED bargraph display for all audio channels.
- Adjustable bit error rate threshold indication for monitoring transmission quality.
- Important status functions implemented with bi-color LED indicators.
- Modular construction that provides excellent shielding, high reliability, easy servicing, and upgrade capability
- Selectable RF spectral efficiency.
- Sample rate converter (SRC) for digital audio operation from 30 to 50 kHz.

1.3 Specifications

1.3.1 System Specifications

Audio Capacity	4 linear (32 kHz sample rate) + 2 data channels; 2 linear (48 kHz sample rate) + 4 MPEG encoded + 2 data channels; 2 linear (32 kHz sample rate) + 6 MPEG encoded + 2 data channels
Frequency Range	800-960 MHz synthesized Fully Synthesized No adjustments within a 2 MHz band Adjustable within 20 MHz without component changes
Frequency Step Size	25 kHz
Occupied Bandwidth	200/250/300/500 kHz. Note: Rate & QAM mode dependent, see Table 1-1 below for details.
RF Spectral Efficiency	See Appendix
Threshold Performance	See Table 1-1 below for details.
Audio Frequency Response vs. Sample Rate:	
32 kHz:	5 Hz-15 kHz; -3 dB bandwidth, +/- 0.2 dB flatness
44.1 kHz:	5 Hz-20 kHz; -3 dB bandwidth, +/- 0.2 dB flatness
48 kHz:	5 Hz-22.5 kHz; -3 dB bandwidth, +/- 0.2 dB flatness
Audio Distortion	<0.01% <0.01% at 1 kHz (compressed)
Audio Dynamic Range	92 dB Digital (AES/EBU) IN/OUT 83 dB Analog IN/OUT
Audio Crosstalk	< -80 dB
Audio Data Coding Method	Linear ISO/MPEG (Layer II) or Sub-band ADPCM
Audio Sample Rate	Selectable 32, 44.1, 48 kHz built-in rate converter

Audio Coding Time Delay	Linear: 0 ms ADPCM: < 3.8 ms (wide) ISO/MPEG: 22 ms
QAM Time Delay **(Add to Audio Coding Delay above)**	Depends on Interleave Factor: 1 - 2.6 mS 2 - 3.7 mS 3 - 5.0 mS (typical) 4 - 6.0 mS 6 - 8.0 mS 12 - 14.0 mS
Bit Error Immunity	>1 x 10E-04 for no subjective loss in audio quality
Async Data Channels	One for each audio pair
Aggregate Transmission Rates	Depends on number of audio channels
Diagnostics	FWD Power, REV Power, TX Lock, Radiate, RSL, BER, RX Lock
Status Indicators	Full Duplex: Fault, Alarm, Loopback, TX, TXD, RX, RXD, NMS/CPU. Transmitter: Fault, Alarm, VSWR, Radiate, Standby, AFC Lock, Modulator Lock, NMS/CPU. Receiver: Fault, Alarm, Attenuator, Signal, BER, AFC Lock, Demodulator Lock, NMS/CPU.
Fault Detection and Logging	REV Power, PA Current, LO Level, Exciter Level, RSL, BER, Synth Level, Modem Level
Alarm Detection and Logging	FWD Power, AFC Lock , PA Temp, MBAUD, DBAUD, DFEC
Temperature Range	Specification Performance: 0 to 50° C Operational: -20 to 60° C

Table 1-1
Bit Rate, Threshold and Bandwidth for SL9003Q Equipment Variations

Application	Bit Rate (kbps)	10-3 Threshold (dBm)			Bandwidth ** (kHz)		
		16 QAM	32 QAM	64 QAM	16 QAM	32 QAM	64 QAM
2-Channel Linear Audio 32 kHz Sample & 1 data channel	1024	-93	-91	-89	300	250	200
2-Channel Linear 48 kHz Sample & 1 Data Channel	1536	-91.5	-89.5	-87.5	450	375	300
4-Channel Linear 32 kHz Sample & 2 Data Channels	2048	-90	-88	-86	600	500	400

*** Measured using FCC 50/80 dB Digital Mask.*

1.3.2 Transmitter Specifications

Frequency Range	800-960 MHz synthesized
RF Power Output	1 Watt @ 16, 32, 64 QAM, 944-952 MHz
RF Output Connector	Type N (female), 50 ohms
Frequency Stability	0.00001 % (0.1 PPM), 0 – 50° C
Spurious and Harmonic Emission	< -60 dBc
Type of Modulation	User Selectable: 16, 32, 64 QAM
FCC Emission Type Designation	200KD7W 250KD7W 300KD7W 500KD7W
FCC Identifier	CSU9WKSL9003Q74
Power Source	AC: Universal AC, 90-260 VAC, 47-63 Hz DC: +/- 12 VDC +/- 24 VDC +/- 48 VDC Isolated chassis ground
Power Consumption	70 Watts
Dimensions	17" W x 21" D x 5.2" H (3RU) [43.2 cm x 53.3 cm x 13.2 cm]
Weight	24 lbs. (52.8 kg)

1.3.3 Receiver Specifications

Type of Receiver	Dual conversion superheterodyne 1st IF = 70 MHz, 2nd IF = 6.4 MHz
Frequency Range	800-960 MHz synthesized
Receiver Dynamic Range	–35 dBm to –95 dBm
Adjacent Channel Rejection	10 dB with similar Digital SL9003Q system or with DSP 6000/PCL 6000 link.
Image Rejection	70 dB min
Antenna Connector	Type N (female), 50 ohms
Type of Demodulation	Coherent 16, 32, 64 QAM
Error Correction	Reed-Solomon, t = 8
Equalizer	20 tap adaptive
Frequency Stability	0.00001 % (0.1 PPM), 0 – 50° C
BER Threshold Mute Adjust	-95 dBm
Receiver Sensitivity	See Table 1-1 above.
Power Source	Receiver power consumption: 65 Watts
Dimensions	17" W x 14" D x 5.2" H (3RU) [43.2 cm x 35.6 cm x 13.2 cm]
Weight	17 lbs (37.4 kg)

1.3.4 Audio Encoder Specifications

Sample Rate	32/44.1/48 kHz selectable, built-in rate converter
Analog Audio Input	XLR female, electronically balanced, 600/10k ohm selectable, CMRR > 60 dB
Analog Audio Level	-10 dBu to +18 dBu, rear panel accessible
Digital Audio Input	AES/EBU: Transformer balanced, 110 ohm input impedance SPDIF: Unbalanced, 75 ohm input impedance
Data Input	9-pin D male RS-232 levels Async. 300 to 38400 bps selectable (4800 max for ADPCM)
ISO/MPEG Modes	mono, dual channel, joint stereo, stereo (ISO/IEC 111172-3 Layer II) **Sample Rate** 32/44.1/48 kHz selectable **Output Rate** 32/48/56/64/80/96/112/128/160/192/224/256/ 320/384 kHz selectable
ADPCM Modes	mono, stereo (apt-X) **Sample Rate** 16/24/32 kHz selectable **Output Rate** 128/192/256 kbps stereo (follows sample rate) 64/96/128 kbps mono (follows sample rate)
Trunk Output	15-pin D female, Synchronous V.35 or RS-449 **Output Rates** Uncompressed Linear (1.024, 1.408, 1.4112, or 1.536 Mbps) Compressed (ISO/MPEG or ADPCM)

1.3.5 Audio Decoder Specifications

Sample Rate	32/44.1/48 kHz selectable, built-in rate converter
Analog Audio Output	XLR male, electronically balanced, low Z/600 ohm selectable
Analog Audio Level	-10 dBu to +18 dBu, rear panel accessible
Digital Audio Output	AES/EBU: Transformer balanced, 110 ohm input impedance SPDIF: Unbalanced, 75 ohm input impedance
Data Output	9-pin D male RS-232 levels Async. 300 to 38400 bps selectable (4800 max for ADPCM)
ISO/MPEG Modes	Mono, dual channel, joint stereo, stereo (ISO/IEC 111172-3 Layer II) **Sample Rate:** 32/44.1/48 kHz selectable **Input Rate:** 32/48/56/64/80/96/112/128/160/192/224/256/ 320/384 kHz selectable
ADPCM Modes	mono, stereo (Apt-X) **Sample Rate:** 16/24/32 kHz selectable **Input Rate:** 128/192/256 kbps stereo (follows sample rate), 64/96/128 kbps mono (follows sample rate)
Trunk Input	15-pin D female, Synchronous V.35 or RS-449 **Input Rates:** Uncompressed Linear (1.024, 1.408, 1.4112, or 1.536 Mbps) Compressed (ISO/MPEG or ADPCM)

1.3.6 Intelligent Multiplexer Specifications

Capacity	4 local Ports, can multiplex 8 audio cards
Aggregate Rates	Up to 2.048 Mbps
Resolution	8000 bps, 768-2048 kbps; 4000 bps, 384-768 kbps; 2000 bps, 192-384 kbps, 1000 bps, 96-192 kbps; 500 bps, 48-96 kbps; 250 bps, 24-48 kbps
Clocks	Internal, Derived, External Port
Local Port Interfaces	*Choice of:* Voice; Low Speed Async Data (RS-232), High Speed Sync Data (V.35, RS-449)
Data Rates	Low Speed 300-38400 bps; Voice 16, 24, 32, 64 kbps; High Speed to 2040 kbps
Trunk	V.35 or RS-449

1.4 Regulatory Notices

FCC Part 15 Notice

Note: This equipment has been tested and found to comply with the limits for a Class A digital device, pursuant to part 15 of the FCC Rules. These limits are designed to provide reasonable protection against harmful interference when the equipment is operated in a commercial environment. This equipment generates, uses, and can radiate radio frequency energy and, if not installed and used in accordance with the instruction manual, may cause harmful interference to radio communications. Operation of this equipment in a residential area is likely to cause harmful interference, in which case the user will be required to correct the interference at his own expense.

Any external data or audio connection to this equipment must use shielded cables.

FCC Part 74 Equipment Authorization

The SL9003Q Transmitter has been granted Equipment Authorization under Part 74 of the FCC Rules and Regulations.

Equipment Class:	***Broadcast Transmitter Base Station***
Frequency Range:	***944-952 MHz***
Emission Bandwidth:	***200 – 500 kHz***
FCC Identifier:	***CSU9WKSL9003Q74***

This page is intentionally blank.

Section 2

Quick Start

2.1 Unpacking

The following is a list of all included items.

Description	Quantity
SL9003Q Transmitter (3RU, long chassis)	1
SL9003Q Receiver (3RU, short chassis)	1
Rack Ears (w/hardware)	4
Extender Card (Universal QAM)	1
Power Cord (IEC 3 conductor)	2
Manual	2
Test Data Sheet (customer documentation)	2

Be sure to retain the original boxes and packing material in case of return shipping. Inspect all items for damage and/or loose parts. Contact the shipping company immediately if anything appears damaged. If any of the listed parts are missing, call the distributor or Moseley immediately to resolve the problem.

2.2 Notices

CAUTION

DO NOT OPERATE UNITS WITHOUT AN ANTENNA, ATTENUATOR , OR LOAD CONNECTED TO THE ANTENNA PORT. DAMAGE MAY OCCUR TO THE TRANSMITTER DUE TO EXCESSIVE REFLECTED RF ENERGY.

ALWAYS ATTENUATE THE SIGNAL INTO THE RECEIVER ANTENNA PORT TO LESS THAN 3000 MICROVOLTS. THIS WILL PREVENT OVERLOAD AND POSSIBLE DAMAGE TO THE RECEIVER MODULE

WARNING

HIGH VOLTAGE IS PRESENT INSIDE THE POWER SUPPLY MODULE WHEN THE UNIT IS PLUGGED IN. REMOVAL OF THE POWER SUPPLY CAGE WILL EXPOSE THIS POTENTIAL TO SERVICE PERSONNEL.

TO PREVENT ELECTRICAL SHOCK, UNPLUG THE POWER CABLE BEFORE SERVICING.

UNIT SHOULD BE SERVICED BY QUALIFIED PERSONNEL ONLY.

PRE-INSTALLATION NOTES

- *Always pre-test the system on the bench in its intended configuration prior to installation at a remote site.*
- *Avoid cable interconnection length in excess of 1 meter in strong RF environments.*
- Do not allow the audio level to light the red "clip" LED on the front panel bargraph, as this causes severe distortion (digital audio overload).
- We **highly** recommend installation of lightning protectors to prevent line surges from damaging expensive components.

2.3 Rack Mount

The SL9003Q is normally rack-mounted in a standard 19" cabinet. Leave space clear above (or below) the unit for proper air ventilation of the card cage. The rack ears are typically mounted as shown in Figure 2-1. Other mounting methods are possible, as outlined in Section 3, *Installation.*

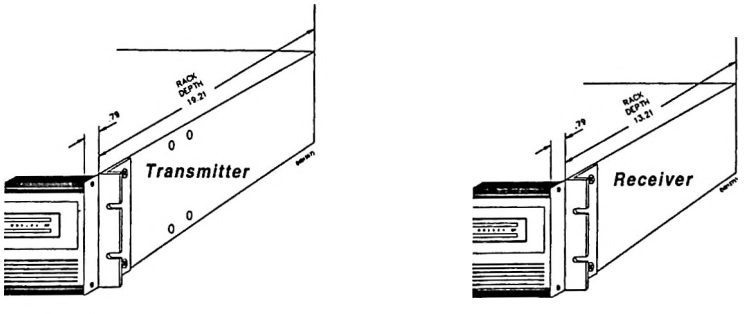

Figure 2-1
SL9003Q Typical Rack Mount Bracket Installation

2.4 Typical Installations

Figures 2-2 and 2-3 (pages 2-7 and 2-8) show a detailed overview of the rear panels for a typical 4 channel SL9003Q STL system. These two figures provide an experienced user with enough details to install a system. A 2-channel system would have only one encoder (TX) and decoder (RX) pair. The 4-channel system you receive may or may not include a MUX module. This is not an issue, however, since the MUX module is not normally re-configurable for STL systems and its operation is transparent to the user.

2.5 Transmitter Power-Up Setting

As shipped, the SL9003Q transmitter will radiate into the antenna upon power-up, THIS ASSUMES THAT THE ANTENNA LOAD IS GOOD (LOW VSWR). If the VSWR of the load causes a high reverse power indication at the RFA, the red VSWR LED will light and the transmitter will cease radiating. This is called the "AUTO" setting in the QAM RADIO CONTROL screen (see below).

The LCD screen ("QAM RADIO TX CONTROL") selects the power-up state and controls the radiate function of the TX unit.

- Go to the MAIN MENU:

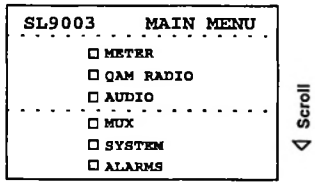

- Scroll to QAM Radio, press ENTER
- Select Launch Screen for CONTROL TX, press ENTER:

. . . . (Continued next page)

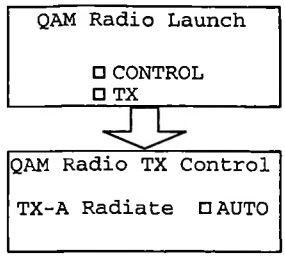

- Verify the AUTO setting.

  AUTO: Transmitter will protect its PA by "folding back" the ALC under bad load VSWR condition *(default setting)*

  ON: Transmitter will remain in radiate at full power under all antenna port conditions *(not recommended).*

  OFF: Transmitter in standby mode.

This page is intentionally blank.

NMS CARD

Provides system CPU control, front panel interface & card setup programming

I/O Port

RS232 PC access

Status LED

Green LED Indicates CPU OK

Reset Switch

Activates hard system reset

MUX CARD (4 Channel)

Multiplexes 2 separate 2-channel digital data streams (from Source Encoder cards) and up to 4 data channels into a single data stream for input to the QAM Modulator.

I/O Ports

CH 1-4: Data inputs- V.35, RS449, RS232, Voice
TRUNK: MUX Aggregate Data Input or Output - V.35, RS449
SETUP: PC access (parallel port)

AUDIO ENCODER

Audio input cards accept digital or analog audio. A/D conversion is performed for the analog inputs. The stereo digital audio is encoded for linear (or MPEG) operation. The resultant data stream is applied to the MUX inputs (4 channel) or the QAM Modulator (2 Channel). An auxiliary data channel is available.

I/O Ports

DATA: Data inputs - RS232 levels, 9-pin D male, Asynchronous 300-38400 bps (4800 max for ADPCM)
TRUNK: Digital data stream input or output (V.35, RS449,)

Audio Inputs

LEFT(CH.1) / RIGHT(CH.2) - Z_{in}=10 kohm, active balanced, +10dBu=0 VU
AES/EBU/SPDIF - Zin=110 ohm, transformer balanced, 30-50 kHz sample rate

QAM MODULATOR

Modulates RF with aggregate data stream.

I/O Ports

TRUNK: MUX aggregate data input or output - V.35, RS449 and RS232 setup.

RF Output

70 MHz OUT - SMA (female)

Status LED

MOD - GREEN indicates Modulator Lock

Transmit Module

Upconversion of QAM Modulator IF to 950 MHz carrier

RF Connectors

70 MHz IN - SMA (female), Modulated IF input from QAM Modulator
TO PA - SMA (female), Upconverter output (940-960 MHz carrier) to be applied to linear Power Amplifier module (internal to radio)

Status LED

TX LOCK - GREEN indicates AFC Lock

POWER SUPPLY

Typical Power Consumption:
80 Watts
Inputs:
AC - Universal Input, 90-260V, 47-63 Hz
DC - 12v/24v/48v (Isolated Input)

Status LED's

+15V - Green LED indicates +15 volt supply OK
+5V - Green LED indicates +5 volt supply OK

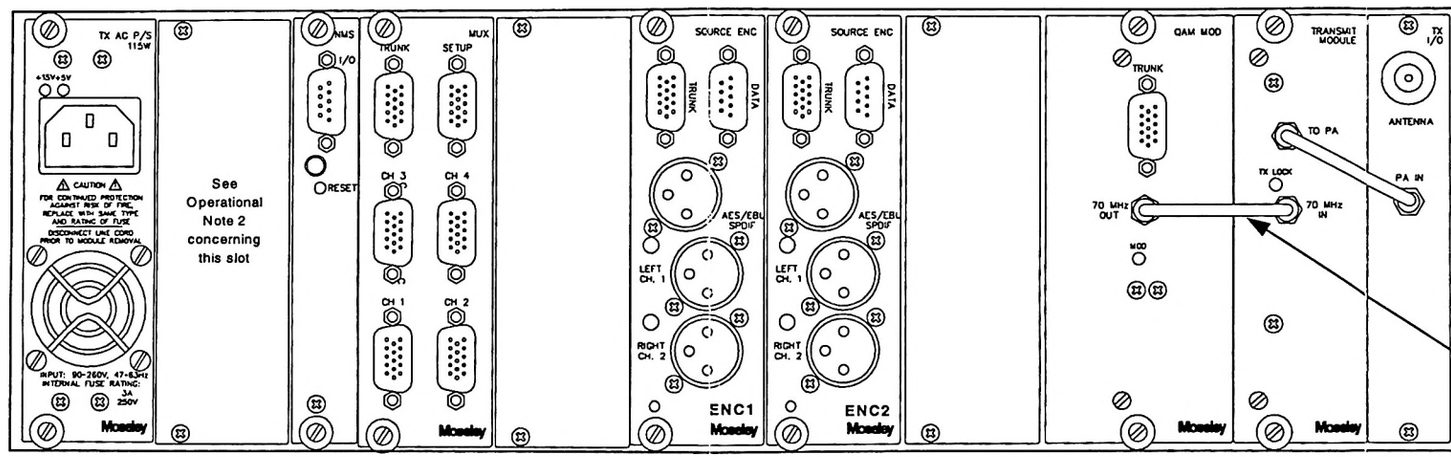

TX I/O

RF interface to Power Amplifier (PA) module

RF Connectors

PA IN - SMA (female), RF cabling to internal PA module

ANTENNA - Type N (female), RF cabling from internal PA module

SEMI-RIGID CABLE

- Ensure that the cables are secure and tightly attached.
- Check for any damage (kinks or breaks in the copper sheath).

OPERATIONAL NOTES:

1. AES/EBU (digital audio) input takes priority over the analog inputs, the module will automatically switch to analog if no AES/EBU input is present. Digital Audio = Primary, Analog Audio = Secondary

2. This slot reserved for Secondary Power Supply (B). For non-redundant systems, slot not used.

3. For SPDIF connection, see Section 5 (Module Configuration).

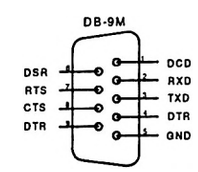

Data Connector Pin-Out
NMS I/O
SOURCE ENCODER DATA

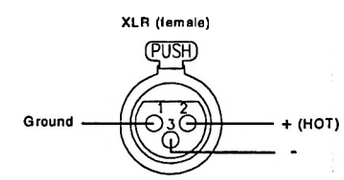

Audio Connector Pin-Out
SOURCE ENCODER INPUTS:
LEFT(CH.1) / RIGHT(CH.2)
AES/EBU (balanced digital audio)
(see Operational Note 3)

Figure 2-2
SL9003Q Transmitter Rear Panel

NMS CARD

Provides system CPU control, front panel interface & card setup programming

I/O Port

RS232 PC access

Status LED

Green LED indicates CPU OK

Reset Switch

Activates hard system reset

MUX CARD (4 Channel)

Demultiplexes the demodulated data stream from the QAM Demod. The output is configured for 2 separate 2-channel data streams and up to 4 data channels.

I/O Ports

CH 1-4: Data inputs- V.35, RS449, RS232, Voice
TRUNK: MUX Aggregate Data Input or Output - V.35, RS449
SETUP: PC access (parallel port)

AUDIO DECODER

Audio output cards accept the data streams from the MUX bus (4 channel) or the QAM Demod (2 channel). The data is decoded for Linear (or MPEG) stereo digital audio output.
D/A conversion is performed for the analog outputs. An auxiliary data channel is available.

I/O Ports

DATA: Data outputs- RS232 levels, 9-pin male
Asynchronous 300-38400 bps (4800 max for ADPCM)
TRUNK: Digital data stream input or output (V.35, RS449)

Audio Outputs

LEFT(CH.1) / RIGHT(CH.2) - Zout<50 ohms, active balanced, +10dBu=0 VU
AES/EBU/SPDIF - Zout=110 ohm, transformer balanced, 32, 44.1, 48 kHz sample rate (32 kHz typical)

QAM DEMODULATOR

Demodulates the IF signal to provide the aggregate data stream for decoding.

I/O Ports

TRUNK: Aggregate data input or output - V.35, RS449 and RS232 setup.

RF Output

70 MHz IN - SMA (female)

Status LED

DEMOD - Color of LED indicates relative signal strength (RSL):
RED (low) - YELLOW (typ.)- GREEN (max)
Upon start-up, LED blinks until lock is acquired.

POWER SUPPLY

Typical Power Consumption:
45 Watts
Inputs:
AC - Universal Input, 90-260V, 47-63 Hz
DC - 12v/24v/48v (Isolated Input)

Status LED's

+15V - Green LED indicates +15 volt supply is OK
+5V - Green LED indicates +5 volt supply is OK

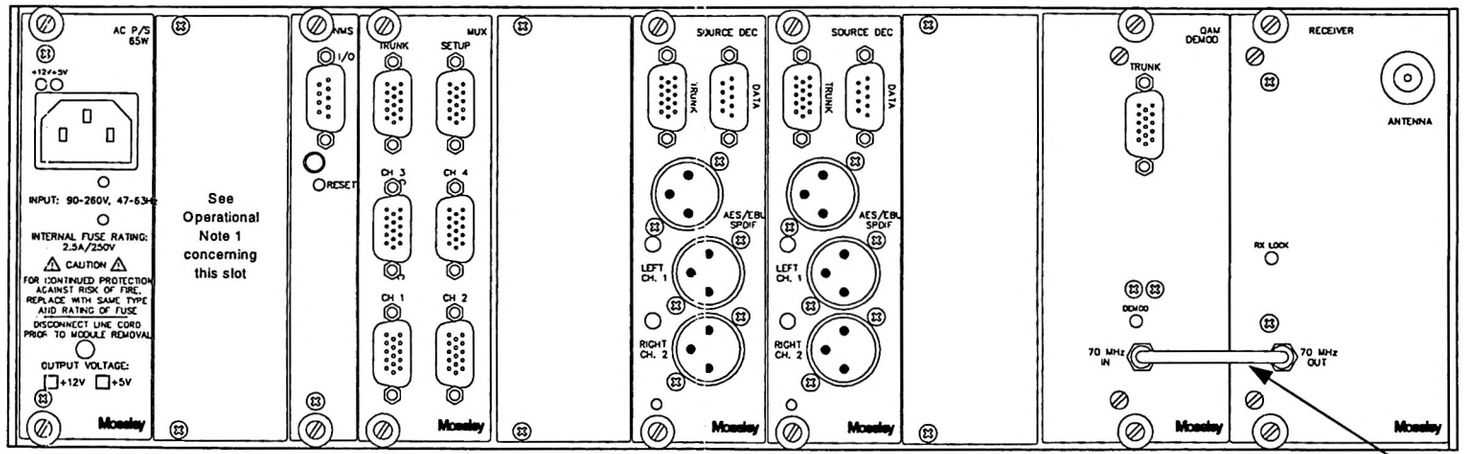

RECEIVER

Preselector and low-noise front-end at 950 MHz.
Downconverts carrier to 70 MHz IF for the QAM Demod.

RF Connectors

70 MHz OUT - SMA (female) Downconversion from 950 MHz carrier.
ANTENNA - Type N, Direct connection to antenna from preselector filter.

Status LED

RX LOCK - GREEN indicates AFC Lock

SEMI-RIGID CABLE

Ensure that the cables are secure and tightly attached.
Check for any damage (kinks or breaks in the copper sheath).

OPERATIONAL NOTES:

1. This slot reserved for Secondary Power Supply (B). For non-redundant systems, slot not used.
2. For SPDIF connection, see Section 5 (Module Configuration).

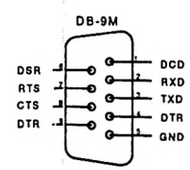

Data Connector Pin-Out
NMS I/O
SOURCE ENCODER DATA

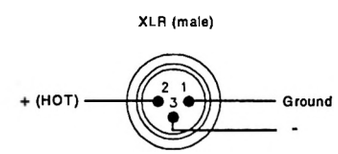

Audio Connector Pin-Out
SOURCE DECODER OUTPUTS:
LEFT(CH.1) / RIGHT(CH.2)
AES/EBU (balanced digital audio)
(see Operational Note 2)

Figure 2-3
SL9003Q Receiver Rear Panel

2.6 Default Settings and Parameters

Listed below are the typical default module settings and parameters. This gives the experienced user a brief rundown of the pertinent information required for system setup. These settings may be accessed through board jumpers or software switches. See Section 5, *Module Configuration*, of this manual for a detailed account of the various module settings and parameters.

2.6.1 Audio

Audio Source Input Switching	Digital Audio = Primary Analog Audio = Secondary (Automatic switch from AES to Analog Input when AES signal is not present)
Analog Audio Connectors	XLR female (input), XLR male (output)
Analog Audio Input	Electronically balanced, 10 kohm
Analog Audio Output	Electronically balanced, low-Z (<100 ohms)
Analog Audio I/O Levels	+10 dBu Note: 0 dBu = 0.7746 VRMS (1 mW @ Z=600 ohms)
Digital Audio I/O Parameters	AES/EBU: Transformer balanced, 110 ohm impedance 30-50 kHz input sample rate
Data Coding Method (System Dependent)	• Linear (16 bit) • ISO/MPEG (Layer II) • Sub-band ADPCM
ISO/MPEG Mode	Stereo (ISO/IEC 111172-3 Layer II)
ISO/MPEG Sample Rate	32 kHz
ISO/MPEG Output Rate	256 kbps
ADPCM Mode	Stereo (Apt-X)
ADPCM Sample Rate	32 kHz
ADPCM Output Rate	256 kbps

2.6.1.1 Identifying Audio Connections (4-channel)

In a 4 channel system, there are two physically identical encoders in the transmitter unit and two corresponding decoder modules in the receiver unit. The modules are identified with an ID # on the rear panel (ENC1, ENC2, DEC1, DEC2).

The audio configuration of the module can be checked on the Test Data Sheet supplied with the units.

2.6.2 Data Channel

The normal serial data channels are located at the encoder/decoder modules (except for special configurations, see below). ENC1 contains Data Channel 1, ENC2 contains Data Channel 2, and so on. Dip-switches located at the on encoder/decoder modules configure the data channel rates and bit length (see Section 5, *Module Configuration*, for changing the data channel configuration). The following is the factory default rate unless it was specified at the time of order (check the Test Data Sheet for factory setting).

Data Channel	9-pin D male, RS-232 levels, Asynchronous 1200 baud, 8 bits, 1 start & 1-2 stop bits.

2.6.2.1 Identifying Data Channels on the MUX module

The default configuration for 4 channel systems has no I/O data channels present at the MUX module.

Note, however, that certain special factory configurations will require data channels to be stacked in the MUX module, and each MUX channel (1 - 4) can be configured differently (SYNC, ASYNC, voice, etc.). Consult the test data sheet for details regarding your system. Also see Section 5, *Module Configuration*, for more information.

2.6.3 RF Parameters

The RF module parameters are optimized for the shipping configuration of the unit and there are no user adjustments available. The following parameters are given for reference only. The test data sheet and LCD screens will list the unit's RF telemetry values and will be specific to your unit.

Frequency	940-960 MHz (customer dependent)
Power Output	1 watt (average)
PA Current	2.4 amps

2.6.4 QAM Modulator/Demodulator

The QAM Modulator/Demodulator module parameters are optimized for the shipping configuration of the unit and there are no user adjustments available. The following parameters are given for reference only. The test data sheet and LCD screens will list the unit's configuration and telemetry values and will be specific to your unit.

Modulation Efficiency	16, 32, 64QAM (depends on channel configuration)
IF Frequency	70 MHz

2.7 External Communications Equipment

Customers that are installing a CSU for T1 backup applications may be required to configure the timing clock settings. Check the Appendix for typical settings.

2.8 Performance

After the link is installed, certain performance parameters may be interrogated through the front panel for verification. Section 4, *Operations*, contains an LCD Menu Flow Diagram and other useful information to assist in navigating to the appropriate screen.

2.8.1 Transmitter Performance Check

Check the QAM RADIO TX STATUS screens to check the transmitter performance parameters. The table below gives generally acceptable readings. Be sure to check the Test Data Sheet for the actual factory readings from your particular unit.

Follow the screens as outlined below for navigation to the QAM RADIO TX STATUS screens:

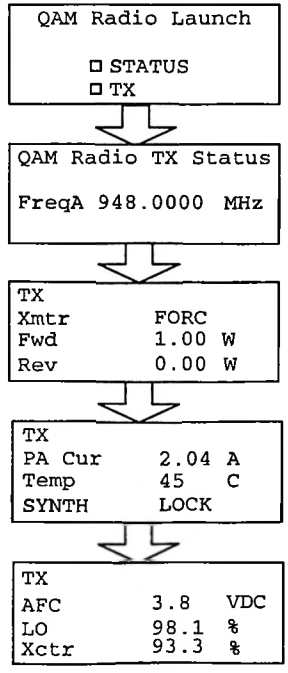

. . . . (continued next page)

Parameter	Name	Typical Value Range	
Forward Power	FWD	0.9 W	1.1 W
Reflected Power	REV	0.0 W	0.2 W
PA Current	PA-CUR	2.20 A	2.60 A

2.8.2 Receiver Performance Check

Check the QAM RADIO MODEM STATUS screens to check the transmitter performance parameters. The table below gives generally acceptable readings. Be sure to check the Test Data Sheet for the actual factory readings from your particular unit.

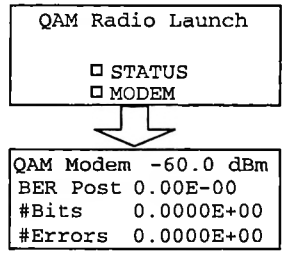

Parameter	Name	Typical Value Range	
Received Signal Level	RSL	-90 dBm	-50 dBm
Bit Error Rate (post-FEC)	BER post	0.00E+00	0.00E+00

2.9 Details, details, details...

This "Quick Start" section was designed to give the experienced user enough information to get the studio-transmitter link up and running. Less experienced users may benefit by reading the manual all the way through prior to installation.

Also, many systems are specially configured for customers. Please check the Test Data Sheet for the exact shipping configuration you received.

The rest of this manual will provide many details regarding the installation and operation of the system, internal module configurations, troubleshooting and system theory. Be sure to browse the Appendix for further technical discussion that may be of help.

If problems still exist for your application, do not hesitate to call Moseley Technical Services for assistance.

Section 3

Installation

3.1 Rear Panel Connections

Section 2, *Quick Start,* contains two fold-out diagrams showing the rear panel of the SL9003Q transmitter (Fig 2-2) and receiver (Fig 2-3). Please refer to these figures for details regarding the rear panel connections.

3.2 Power Requirements

3.2.1 Power Supply Card Slot Details

The leftmost slot in the SL9003Q card cage (as viewed from the rear of the unit) is designated as the "PRIMARY A" power supply. This is the default slot for non-protected systems.

The next slot to the right is designated as "SECONDARY B". This slot will be occupied only if a second QAM radio module set is installed in a redundant system. The SL9003Q TX utilizes these slots to separate the PA supply lines (+15sw-A, +15sw-B). The main bus voltages (+5 and +/-15) are summed in the backplane and provide the supply the plug-in modules.

NOTE:

The front panel LCD screen displays the system supply voltages and the nomenclature follows the physical location of the power supply modules.

3.2.2 AC Line Voltage

The SL9003Q TX and RX both use a high reliability, universal input switching power supply capable of operating within an input range of:

90 - 260 VAC; 47 - 63 Hz

The power supply module is removable from the unit and a perforated cage protects service personnel from high voltage.

The TX power supply is fan cooled due to high power consumption by the PA.

CAUTION

High voltage is present when the unit is plugged in.

To prevent electrical shock, unplug the power cable before servicing.

Power supply module should be serviced by **qualified** *personnel only.*

3.2.3 DC Input Option

An optional DC input power supply is available for the SL9003Q TX and RX, using a high reliability, DC-DC converter capable of operation within the following input ranges (dependent upon nominal input rating):

Nominal DC Input	Operating Input Range
12 Volt:	10 – 20 VDC
24 Volt:	18 – 36 VDC
48 Volt:	36 – 72 VDC

The DC input is isolated from chassis ground and can be operated in a positive or negative ground configuration. The power supply module is removable from the unit and no high voltages are accessible.

The TX power supply contains two DC-DC converters, one of which supplies the PA (+15sw-A or +15sw-B) exclusively.

3.2.4 Fusing

For AC modules, the main input fuse is located on the switching power supply mounted to the carrier PC board and the protective cage may be removed for access to the fuse.

For DC modules, all fusing is located on the carrier PC board.

Always replace any fuse with same type and rating. Other fuses are present on the board, and are designed for output fail-safe protection of the system. All output fuse values are printed on the back side of the PC board to aid in replacement.

NOTE:

If a fuse does blow in operation, investigate the possible cause of the failure prior to replacing the fuse, as there is adequate built-in protection margin.

3.3 Preliminary Bench Tests

It is best to perform back-to-back tests of the entire system on the bench prior to installation at the site. Digital STLs have different parameters for system checks than analog STLs. Back-to-back bench testing is a good way to familiarize the user with the SL9003Q system. Figure 3-1 shows a typical setup for bench testing a complete system.

CAUTION

Observe these precautions when performing any STL bench test:

- *Always operate the transmitter terminated into a proper 50-ohm load.*
- *Always attenuate the signal into the receiver to less than 3000 microvolts.*
- *Failure to observe these precautions can cause the transmitter final amplifier to be destroyed or the receiver preamplifier to be damaged.*

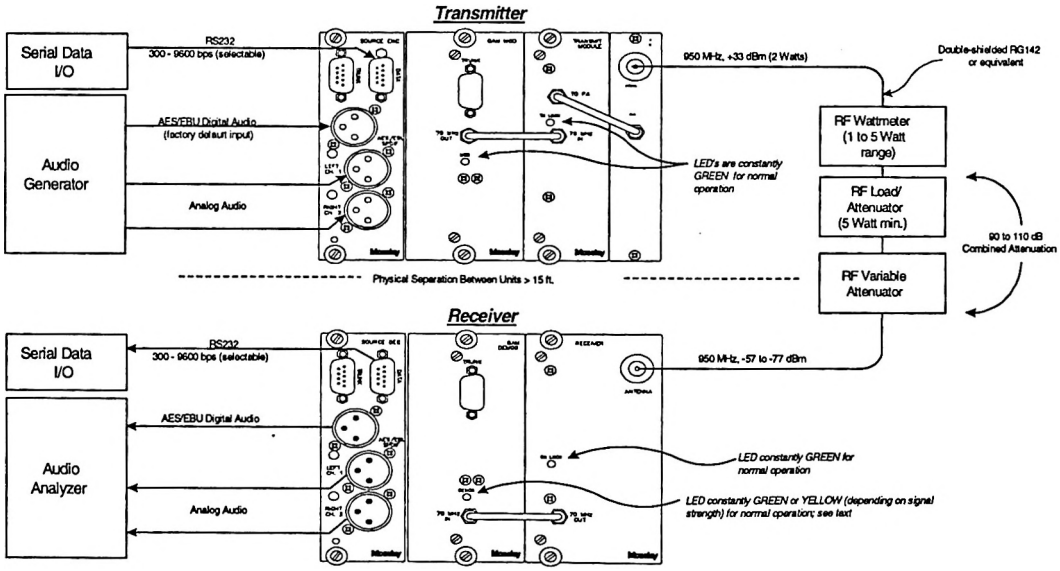

Figure 3-1. SL9003Q RF and Audio Bench Test Setup

3.3.1 RF Bench Test

Test Equipment

RF WATTMETER	950 MHz OPERATION WITH A MEASUREMENT RANGE OF 1–5 WATTS
RF POWER ATTENUATOR	50 OHM, 5 WATT "DUMMY LOAD" FOR 950 MHZ OPERATION WITH 20 TO 30 DB OF ATTENUATION
VARIABLE STEP ATTENUATOR	0–100 dB AT 950 MHZ
SERIAL I/O DATA	RS232, 300-9600 BPS; (EQUIVALENT TO THE SUBCARRIER DATA PORT THAT WILL BE USED IN THE SITE INSTALLATION)

Procedure

1. Connect the equipment as shown in Fig. 3-1. Be sure to physically separate the TX and RX units by greater than 15 feet, in order to provide isolation for the BER threshold measurement. Calculate or measure the signal level present at the SL9003Q RX antenna input **(-60 dBm typical).**

2. Apply AC power to the SL9003Q receiver. On the Receiver module rear panel, the RX LOCK LED will light up red and change to green, indicating PLL lock of the downconverter. On the QAM Demod module rear panel, the DEMOD LED will flash red, indicating that there is no lock yet at the demod.

3. Apply AC power to the SL9003Q transmitter. On the Transmit Module rear panel, **the TX LOCK LED will light up red and change to green**, indicating PLL lock of the upconverter. On the QAM Mod module rear panel, **the MOD LED will flash red, and then change to green**, indicating lock of the QAM modulator.

4. The output power on the wattmeter should measure between 1.5 and 2.0 Watts.

5. Within 90 seconds after the TX carrier is present (30 sec. typical), **the DEMOD LED will stop blinking and turn to a solid color:**

   - GREEN indicates high signal strength (ACCEPTABLE)
   - **YELLOW indicates average signal strength (TYPICAL)**
   - DARK ORANGE indicates low signal strength (ACCEPTABLE)
   - FLASHING RED indicates no signal (NON-OPERATIONAL)

6. After verifying the DEMOD LED is within the color range, go to the QAM RADIO RX STATUS screen on the front panel LCD display and page down to the RSL parameter (see the screen navigation block diagram in Section 4, *Operation*, for an overview of the LCD display).

```
QAM Radio Launch

  □ STATUS
  □ RX
```

```
QAM Radio RX Status
FreqA 950.0000 MHz
```

```
RX
Rcvr        FORC
RSL         -65   dBm
Atten       AUTO
```

```
RX
SYNTH       LOCK
AFC          4.5  VDC
LO          100   %
```

7. Verify that **the RSL (Received Signal Level) is reading within 2 dB of the calculated value for your setup (-60 dBm typical).**

8. Go to the QAM MODEM STATUS (Post-BER) screen on the front panel LCD display (see the screen navigation block diagram in Section 4, *Operations*, for an overview of the LCD display).

```
QAM Radio Launch

  □ STATUS
  □ MODEM
```

```
QAM Modem     -60 dBm
BER Post 0.00E+00
#Bits    0.0000E+00
#Errors  0.0000E+00
```

*Note that the RSL is also displayed in this screen in the upper right corner.

9. With the POST-BER in the display, press ENTER. This will reset the bit counter (#BITS) to zero. **There should be no errors (#ERRORS = zero) under this signal condition.**

10. Verify BER threshold performance of the system as follows: Increase the variable attenuation until the QAM MODEM STATUS (POST) screen displays a **BER reading of approximately 1.00E-06**. This will take some time in order to accumulate enough bits for an accurate measurement.

11. The RSL reading should be approximately:

    2 channel: –89 dBm (+/- 2 dBm).
    4 channel: –86 dBm (+/- 2 dBm).

12. Set the variable attenuator for a reading of -60 dBm on the display.

13. Reset the bit counter and verify error-free operation

14. Proceed to the Audio Bench Test for further performance verification.

3.3.2 Audio and Data Channel Bench Test

Test Equipment

RF WATTMETER	950 MHz OPERATION WITH A MEASUREMENT RANGE OF 1–5 WATTS
RF POWER ATTENUATOR	50 OHM, 5 WATT "DUMMY LOAD" FOR 950 MHZ OPERATION WITH 20 TO 30 DB OF ATTENUATION
VARIABLE STEP ATTENUATOR	0–100 dB AT 950 MHZ
SERIAL I/O DATA	RS232, 300-9600 BPS; (EQUIVALENT TO THE SUBCARRIER DATA PORT THAT WILL BE USED IN THE SITE INSTALLATION)
AUDIO DISTORTION ANALYZER	AES/EBU DIGITAL AUDIO I/O IS DESIRABLE. (TEST EQUIPMENT WILL ALLOW ADJUSTMENT OF LEVELS FOR CALIBRATION CHECK.)

Procedure

1. Connect the equipment as shown in Fig. 3-1. Be sure to physically separate the TX and RX units by greater than 15 feet.

2. Ensure the link is RF operational as outlined in the RF Bench Test (Section 3.2.1). **Adjust the attenuator for an RSL reading of –60 dBm +/- 2 dBm and verify error-free operation.**

3. Ensure that the appropriate module ID# is selected in both the Transmitter and Receiver Units' (in the METER LCD screen).

4. **AES/EBU Digital Audio Test:** Apply a 1kHz stereo tone, at a level of 0 dB (full scale), to the Source Encoder module.

5. The front panel bargraph of the transmitter and the receiver should register a 0 dB reading for both channels.

6. **Analog In/Out Audio Test:** Be sure there is no AES signal at the module in order to force the auto-switching circuitry to the analog inputs. Next, apply a 1 kHz tone, at a level of +10dBm, to the left (CH.1) channel.

7. The front panel bargraph of the transmitter and the receiver should register a 0 dB reading for Channel 1.

8. Measure the audio frequency response:
   32 kHz sample rate: 5 Hz-15 kHz +/- 0.2 dB
   44.1 kHz sample rate: 5 Hz-20 kHz +/- 0.2 dB
   48 kHz sample rate: 5 Hz-22.5 kHz +/- 0.2 dB

9. Signal to Noise: Measure the 1 kHz level and set a reference for an SNR measurement.

10. Disconnect or disable the tone at the encoder input and measure the SNR of the system:
    AES/EBU in/out: < -90 dB (-92 typ) Linear/Compressed
    ANALOG in/out: < -82 dB (-84 typ) Linear/ Compressed

11. Reapply the 1 kHz tone and measure THD:
    Linear, AES/EBU: <0.01% (.0025% typ.)
    Linear, Analog: <0.01% (.008% typ.)
    MPEG, AES/EBU: <0.01% (.003% @ 1kHz typ.)
    MPEG, Analog: <0.015% (.012% @ 1kHz typ.)

    NOTE: *The static distortion measurement of MPEG compressed audio is erroneous in the fact that the compression algorithm is dependent upon dynamic audio level changes (i.e., music). The subjective aural distortion is much lower. The static measurement is also dependent on frequency (.007 % typ @ 7-12kHz). The above values are typical at 1kHz and will provide excellent on-air performance.*

This completes the bench tests for the SL9003Q system. If you have any problems or discrepancies, please consult the Test Data Sheet to check factory readings. If there is still a problem, please call Moseley Technical Services (see Section 6).

3.4 Site Installation

The installation of the SL9003Q involves several considerations. A proper installation is usually preceded by a pre-installation site survey of the facilities. The purpose of this survey is to familiarize the customer with the basic requirements needed for the installation to go smoothly. The following are some considerations to be addressed (refer to Figure 3-2 for Site Installation Details).

Before taking the SL9003Q to the installation site verify that the audio connections are compatible with the equipment to be connected. Also, locate the information provided by the path analysis which should have been performed prior to ordering the equipment. At the installation site, particular care should be taken in locating the SL9003Q in an area where it is protected from the weather and as close to the antenna as possible. Locate the power source and verify that it is suitable for proper installation.

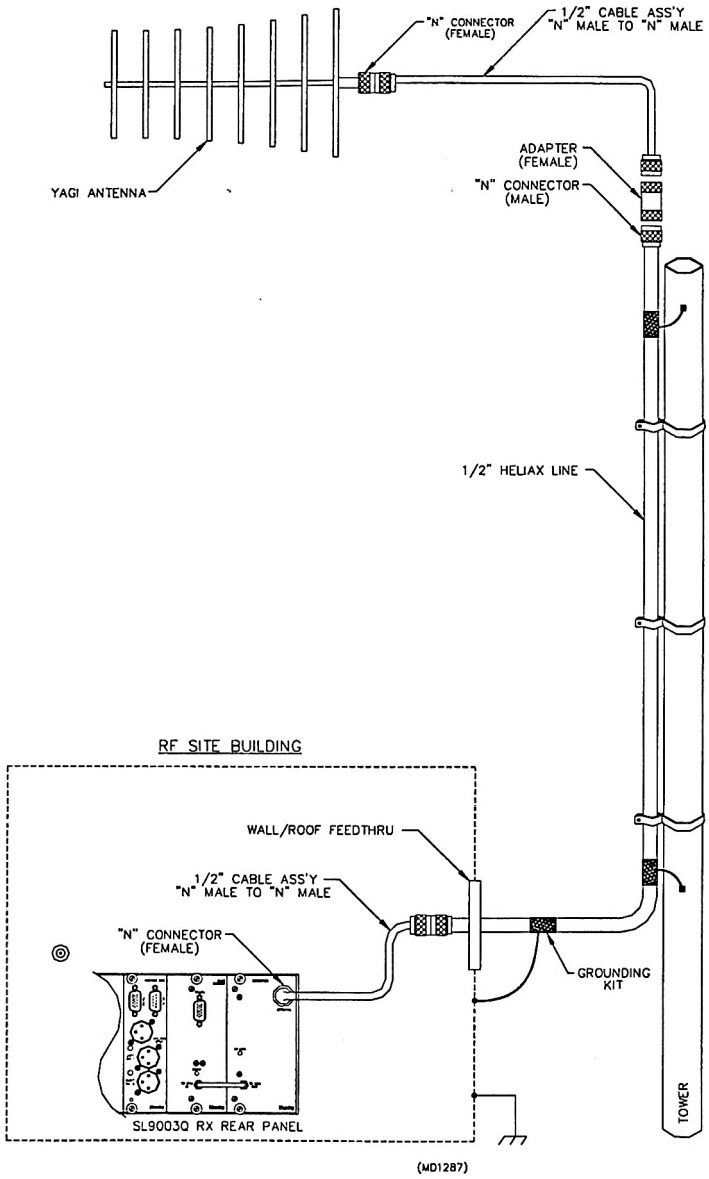

Figure 3-2
Site Installation Details

3.4.1 Facility Requirements

The site selected to house the SL9003Q should follow conventional microwave practice and should be located as close to the antenna as possible. This will reduce the RF transmission line losses, minimize possible bending and kinking of the line, and allow for the full range potential of the radio link.

The building or room chosen for installation should be free from excessive dust and moisture. The area should not exceed the recommended temperature range, allow for ample air flow, and provide room for service access to cables and wiring.

3.4.2 Power Requirements

The AC power supply uses a universal input switching supply that is adaptable to power sources found worldwide. The line cord is IEC (USA) compatible, and the user may need to adapt to the proper physical AC connector in use.

For DC input units, double-check the input voltage marking on the rear panel does indeed match the voltage range provided by the facility. Verify that the power system used at the installation site provides a proper earth ground. The DC option for the SL9003Q have isolated inputs by default, but the user may hard-wire a negative chassis ground inside the module, if desired.

An uninterruptible power supply (UPS) backup system is recommended for remote locations that may have unreliable source power. Lightning protection devices are highly recommended for the power sources and antenna feeds.

3.4.3 Rack Mount Installation

The SL9003Q is designed for mounting in standard 19" rack cabinets, using the brackets ("rack ears") included with the SL9003Q. The rack ear kit is designed to allow flush mount or telecom-mount (front extended). See Figure 3-3 for bracket installation. Be sure to provide adequate air space near the ventilation holes of the chassis (top, bottom, and sides).

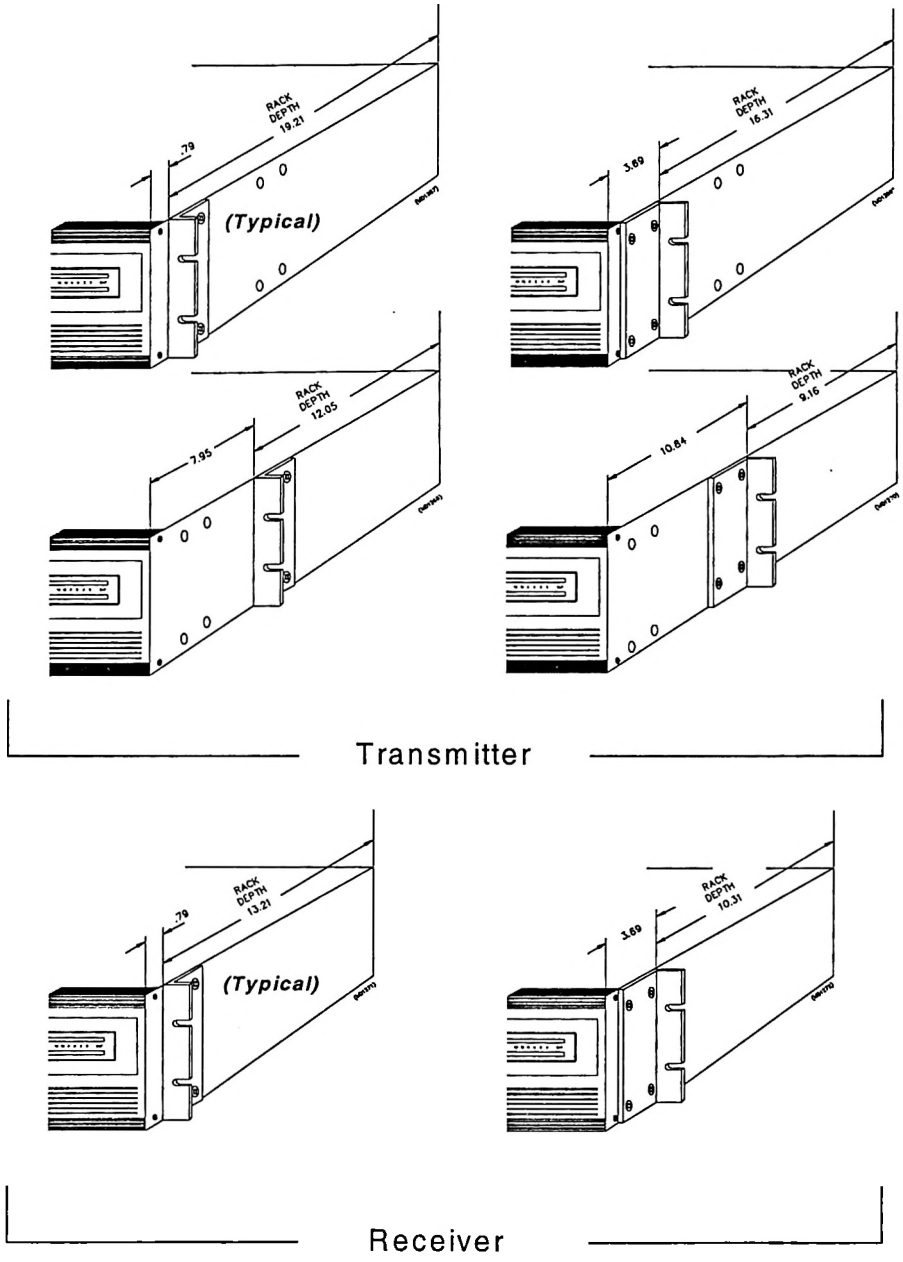

Figure 3-3
Rack Mount Bracket Installation

3.5 Antenna/Feed System

3.5.1 Antenna Mounting

The antennas used as part of the SL9003Q system are directional. The energy radiated is focused into a narrow beam by the transmitting antenna and must be aligned towards the receiving antenna. The type of antenna used in a particular installation will depend on frequency band and antenna gain requirements. These parameters are determined by the path analysis.

The antenna is usually mounted on a pipe mount or tower, on top of a building, on a tower adjacent to building where the SL9003Q is installed, or on some structure that will provide the proper elevation. If the tower or antenna mounting mast is to be mounted on a building, an engineer should be consulted to ensure structural integrity. The antenna support structure must be able to withstand high winds, ice, and rain without deflecting more than one tenth of a degree. The optimum elevation is determined by the path analysis.

Mount the antenna onto its mounting structure but do not completely tighten the mounting bolts at this time. The antenna will need to be rotated during the path aligning process.

Information on how to perform a site survey and path analysis can be found in the Appendix, *Path Evaluation Information.*

3.5.2 Transmission Line

Run the transmission line in such a manner as to protect it from damage. Note that heliax transmission line requires special handling to keep it in good condition. It should be unreeled and laid out before running it between locations. It cannot be pulled off the reel the same way as electrical wire. Protect the line where it must run around sharp edges to avoid damage. A kinked line indicates damage, so the damaged piece must be removed and a splice installed to couple the pieces together.

3.5.3 Environmental Seals

The connections at the antenna and the transmission line must be weather-sealed. This is best accomplished by completely wrapping each connection with Scotch #70 tape (or equivalent), pulling the tape tight as you wrap to create a sealed boot. Then, for mechanical protection over the sealed layer, completely wrap the connection again with Scotch #88 (or equivalent). Tape ends must be cut rather than torn—a torn end will unravel and work loose in the wind. Use plenty of tape for protection against water penetration and the premature replacement of the transmission line.

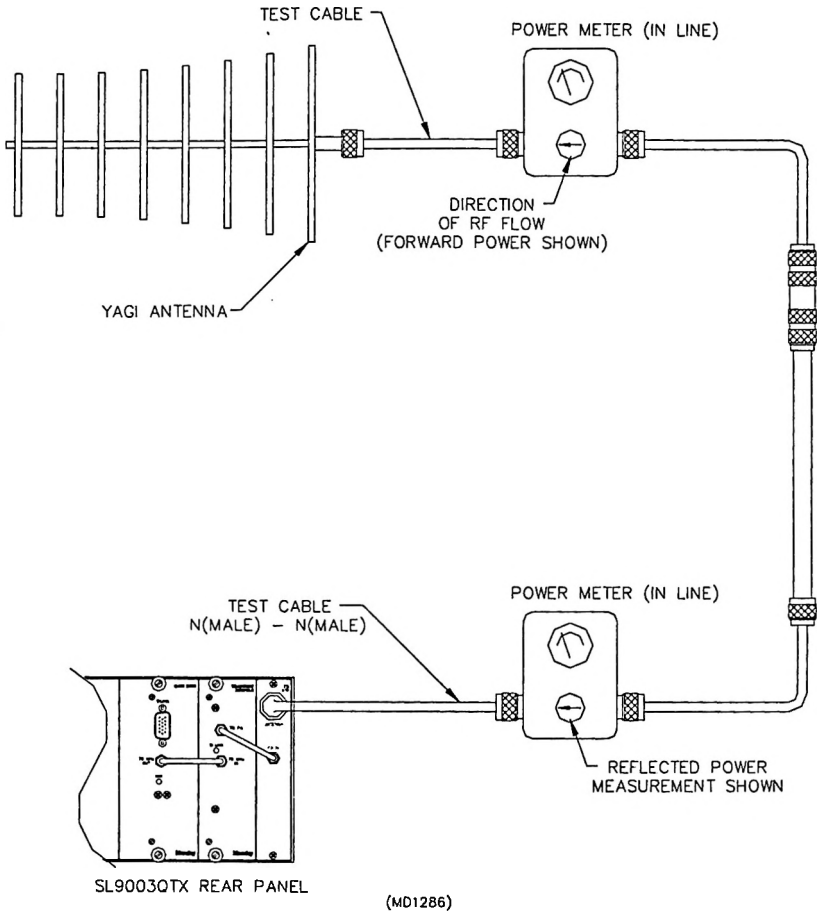

NOTES: 1. MEASURE FORWARD AND REFLECTED POWER AT TRANSMITTER AND ANTENNA TO DETERMINE LINE LOSSES.

2. REFLECTED POWER ≤ 5% OF FORWARD POWER.

Figure 3-4
Transmitter Site Testing

3.6 Transmitter Antenna Testing

After assuring that the SL9003Q is properly installed, attach the transmission line to the "N" connector labeled ANTENNA on the rear of the SL9003Q. Tighten the connector by hand until it is tight. Connect the appropriate audio and data cables to the ports on the rear panel.

After running the transmission line and fastening it in place, connect the antenna end of the transmission line to the antenna feed line, using a short coaxial jumper and a double female

barrel adapter. Connect the radio end of the transmission line to a wattmeter (with appropriate frequency and power rating), using the radio feed line and another coaxial jumper (see Figure 3-4).

Apply power to the SL9003Q and check the status indications for proper initial operation. Observe forward power, and check that reverse power is negligible. Turn off power to the radio.

Exchange the wattmeter with the barrel adapter and coaxial jumper at the antenna end of the transmission line. Power-up the radio.

Observe forward power to the antenna, and verify that power loss in the transmission line is within system specifications. Verify that reflected power from the antenna is negligible. Reflected power should be less than 5% of the forward value, and in most cases will be significantly less. Turn off power to the radio.

Disconnect the test equipment, reconnect the antenna feed lines, and proceed to link alignment.

3.7 Link Alignment

It is very important to aim the antennas properly; if the antennas are not aligned accurately, the system may not operate. An approximate alignment is achieved through careful physical aiming of the antennas toward each other. The receiver should indicate enough signal to operate when this is achieved.

Once an approximate alignment is achieved, align the antennas accurately by accessing the QAM RADIO MODEM STATUS (BER POST) screen and observe the RSL in dBm (upper right corner of display). This screen also displays Bit Error Rates, which is the primary parameter for system performance.

Turn the antenna in small increments until the maximum signal is displayed. Please note that the signal levels should agree with the initial path calculations plus or minus 6 dBm, or there may be a problem with antenna alignment or the antenna system. The #ERRORS display should be zero, while the #BITS is keeping a running count of the data rate. By pressing ENTER while viewing the screen, the error count will reset to zero. This is useful while making antenna adjustments, as erroneous errors can be eliminated from the display for ease of use.

After peak alignment is achieved, tighten the bolts to hold the antenna securely. Double-check the RSL and BER STATUS indications. Link alignment is complete.

Section 4

Operation

4.1 Introduction

This section describes the front panel operation of the SL9003Q digital radio/modem. This includes:

- LCD display (including all screen menus)
- Cursor and screen control buttons
- LED status indicators
- Bargraph Display

4.2 Front Panel Operation

A pictorial of the SL9003Q front panel is depicted in Figure 4-1 below. The LED status indicators are different for the transmitter and receiver, and are detailed in Section 4.2.3.

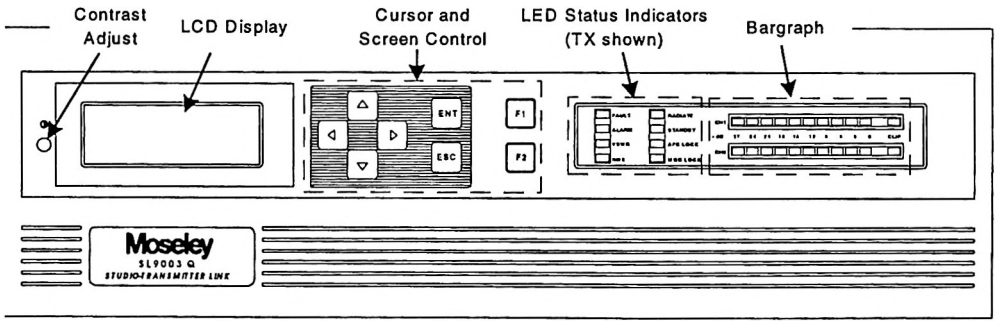

Figure 4-1
SL9003Q Front Panel

4.2.1 LCD Display

The Liquid Crystal Display (LCD) on the SL9003Q front panel is the primary user interface and provides status, control, configuration, and calibration functionality. The menu navigation and various screens are explained in detail later in this section.

Backlight:

An automatic backlight is built-in to the LCD for better clarity under low-light conditions. This backlight is enabled on power-up and will automatically turn off if there is no button activity by the user. The backlight will automatically turn on as soon as any button is pressed.

Contrast Adjustment:

The contrast adjustment is front panel accessible (to the left of the LCD). A small flathead screwdriver may be used to adjust for optimum visual clarity.

4.2.2 Cursor and Screen Control Buttons

The buttons on the SL9003Q front panel are used for LCD screen interface and control functions:

ENT	<ENTER>	Used to accept an entry (such as a value, a condition, or a menu choice).
ESC	<ESC>	Used to "back up" a level in the menu structure without saving any current changes.
▲ ▼	<UP>,<DOWN>	Used in most cases to move between the menu items. If there is another menu in the sequence when the bottom of a menu is reached, the display will automatically scroll to that menu.
◀ ▶	<LEFT>,<RIGHT>	Used to select between conditions (such as ON/OFF, ENABLED/DISABLED, LOW/HIGH, etc.) as well as to increase or decrease numerical values.
F1 F2	<F1>,<F2>	Software programmable buttons (to be implemented in a later software revision)

4.2.3 LED Status Indicators

There are eight status indicator LEDs on the SL9003Q front panel. Their functions are listed in Table 4-1 (Transmitter), Table 4-2 (Receiver) and Table 4-3 (Full Duplex Systems).

Table 4-1
LED Status Indicator Functions (Transmitter)

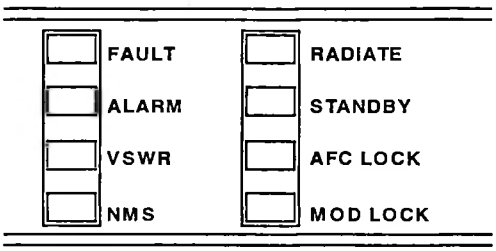

LED	Name	Function
FAULT	Fault	RED indicates that a parameter is out of tolerance and is crucial to proper system operation. If the fault corrects itself, the event will be logged, and the LED will turn off. See the Fault Log Page in the screen menu for a list of events.
ALARM	Alarm	YELLOW indicates that a parameter is out of tolerance, but is NOT crucial for proper system operation (cautionary only). If the alarm corrects itself, the event will be logged, and the LED will turn off. See the Alarm Log Page in the screen menu for a list of events.
VSWR	VSWR	YELLOW indicates the reflected power at the antenna port is above the preset limit.
NMS	NMS/CPU	GREEN indicates CPU is functional.
RADIATE	Radiate	GREEN indicates the transmitter is radiating, and the RF output (forward power) is above the factory-set threshold.
STANDBY	Standby	YELLOW indicates the transmitter in standby mode (ready and able for radiate to be enabled).
AFC LOCK	AFC Lock	GREEN indicates the 1st LO is phase-locked.
MOD LOCK	Modulator Lock	GREEN indicates QAM modulator is locked and functional.

Table 4-2
LED Status Indicator Functions (Receiver)

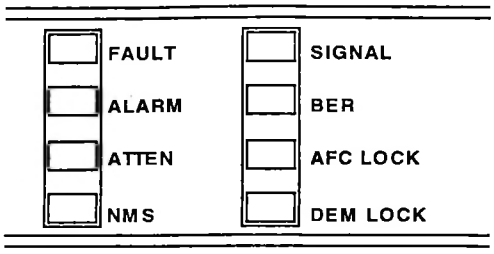

LED	Name	Function
FAULT	Fault	RED indicates that a parameter is out of tolerance and is crucial to proper system operation. If the fault corrects itself, the event will be logged, and the LED will turn off. See the Fault Log Page in the screen menu for a list of events.
ALARM	Alarm	YELLOW indicates that a parameter is out of tolerance, but is NOT crucial for proper system operation (cautionary only). If the alarm corrects itself, the event will be logged, and the LED will turn off. See the Alarm Log Page in the screen menu for a list of events.
ATTEN	Attenuator	YELLOW indicates the front end attenuator is enabled.
NMS	NMS/CPU	GREEN indicates CPU is functional.
SIGNAL	Received Signal	GREEN indicates that the received signal level is above limit.
BER	Bit Error Rate	YELLOW indicates that the BER is higher than the preset threshold.
AFC LOCK	AFC Lock	GREEN indicates the 1st LO is phase-locked.
DEM LOCK	Demodulator Lock	GREEN indicates QAM Demodulator is locked and functional.

Table 4-3
LED Status Indicator Functions (Full Duplex Systems)

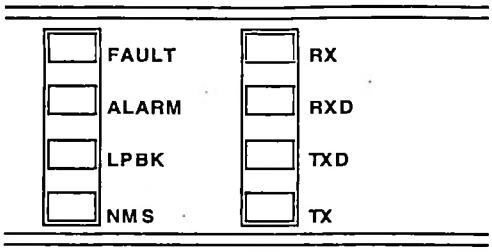

LED	Name	Function
FAULT	Fault	RED indicates that a parameter is out of tolerance and is crucial to proper system operation. If the fault corrects itself, the event will be logged, and the LED will turn off. See the Fault Log Page in the screen menu for a list of events.
ALARM	Alarm	YELLOW indicates that a parameter is out of tolerance, but is NOT crucial for proper system operation (cautionary only). If the alarm corrects itself, the event will be logged, and the LED will turn off. See the Alarm Log Page in the screen menu for a list of events.
LPBK	Loopback	RED indicates analog or digital loopback is enabled.
NMS	NMS/CPU	GREEN indicates CPU is functional.
RX	RX Receiver	GREEN indicates that the receiver is enabled, the synthesizer is phase-locked, and a signal is being received.
RXD	RXD Receive Data	GREEN indicates that valid data is being received.
TXD	TXD Transmit Data	GREEN indicates the modem clock is phase-locked and data is being sent.
TX	TX Transmitter	GREEN indicates the transmitter is radiating, and the RF output (forward power) is above the factory-set threshold.

4.3 Screen Menu Tree Structure

Figures 4-2 a, b, and c show the tree structure of the screen menu system. The figures group the screens into functional sets. There may be minor differences in the purchased unit, due to software enhancements and revisions. The current software revision may be noted in the **SYSTEM** sub-menu (under **INFO**).

In general, **<ENTER>** will take you to the next screen from a menu choice, **<UP>** or **<DOWN>** will scroll through screens within a menu choice, and **<ESC>** will take you back up one menu level. Certain configuration screens have exceptions to this rule, and are noted later in this section.

CAUTION

DO NOT change any settings in the CONFIGURE or CALIBRATE screens. The security lock-out features of the software may not be fully implemented, and changing a setting will most likely render the system non-operational!

Note:
Figures 4-2 a, b, and c are located on the following three fold out pages.

This page is intentionally blank.

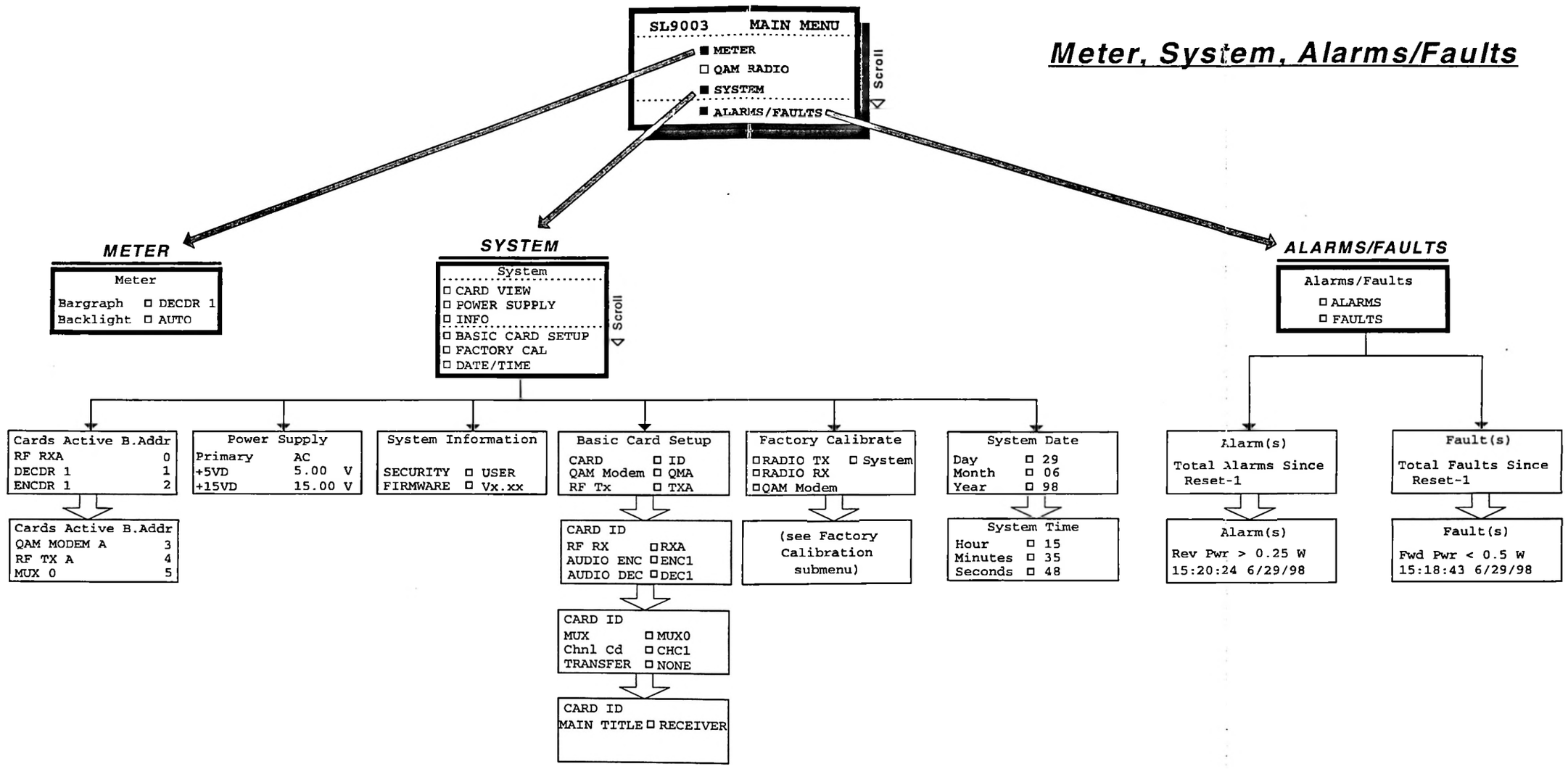

Figure 4-2a
SL9003Q SCREEN MENU TREE

QAM Radio (Launch Screens)

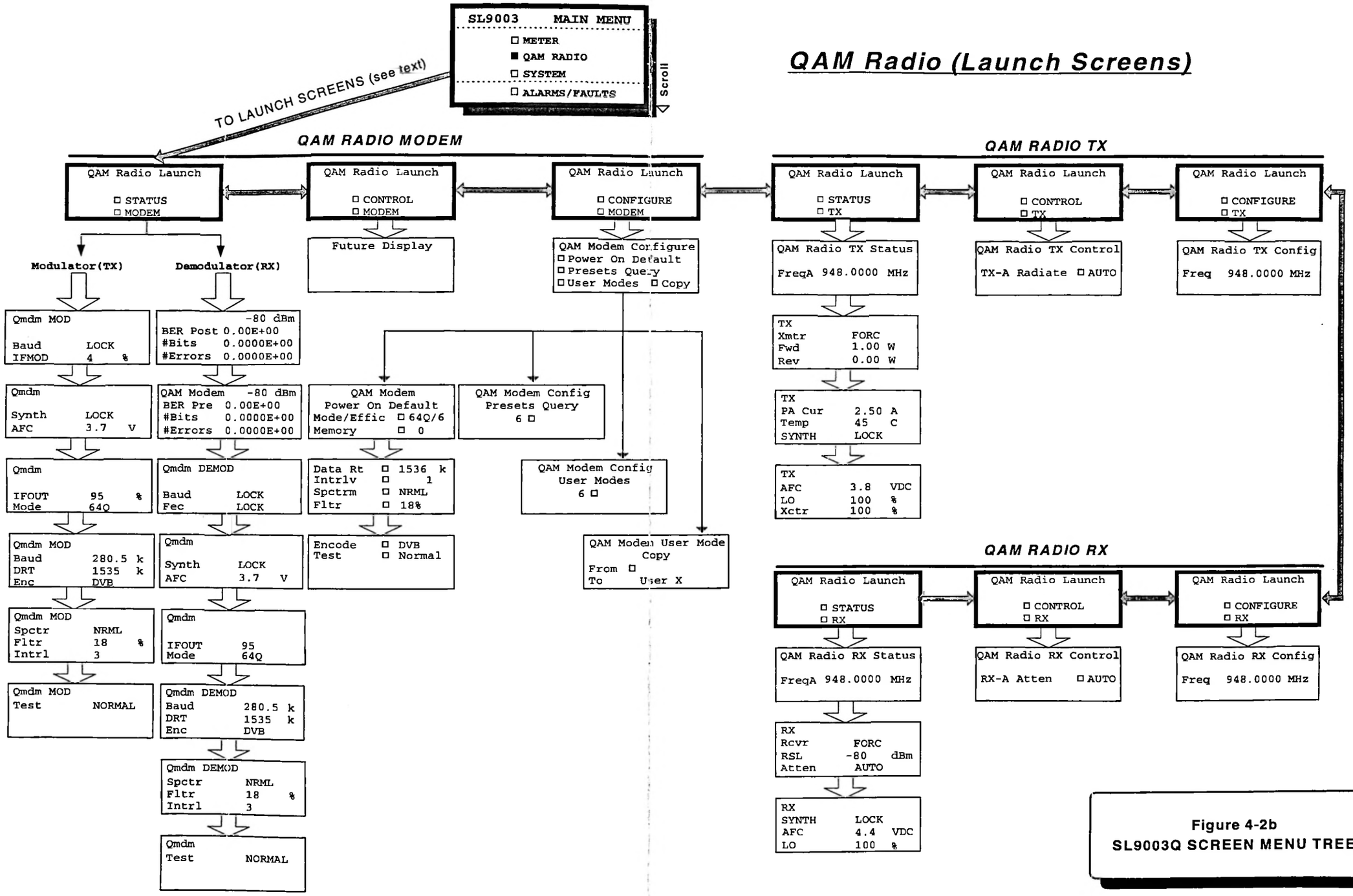

Figure 4-2b
SL9003Q SCREEN MENU TREE

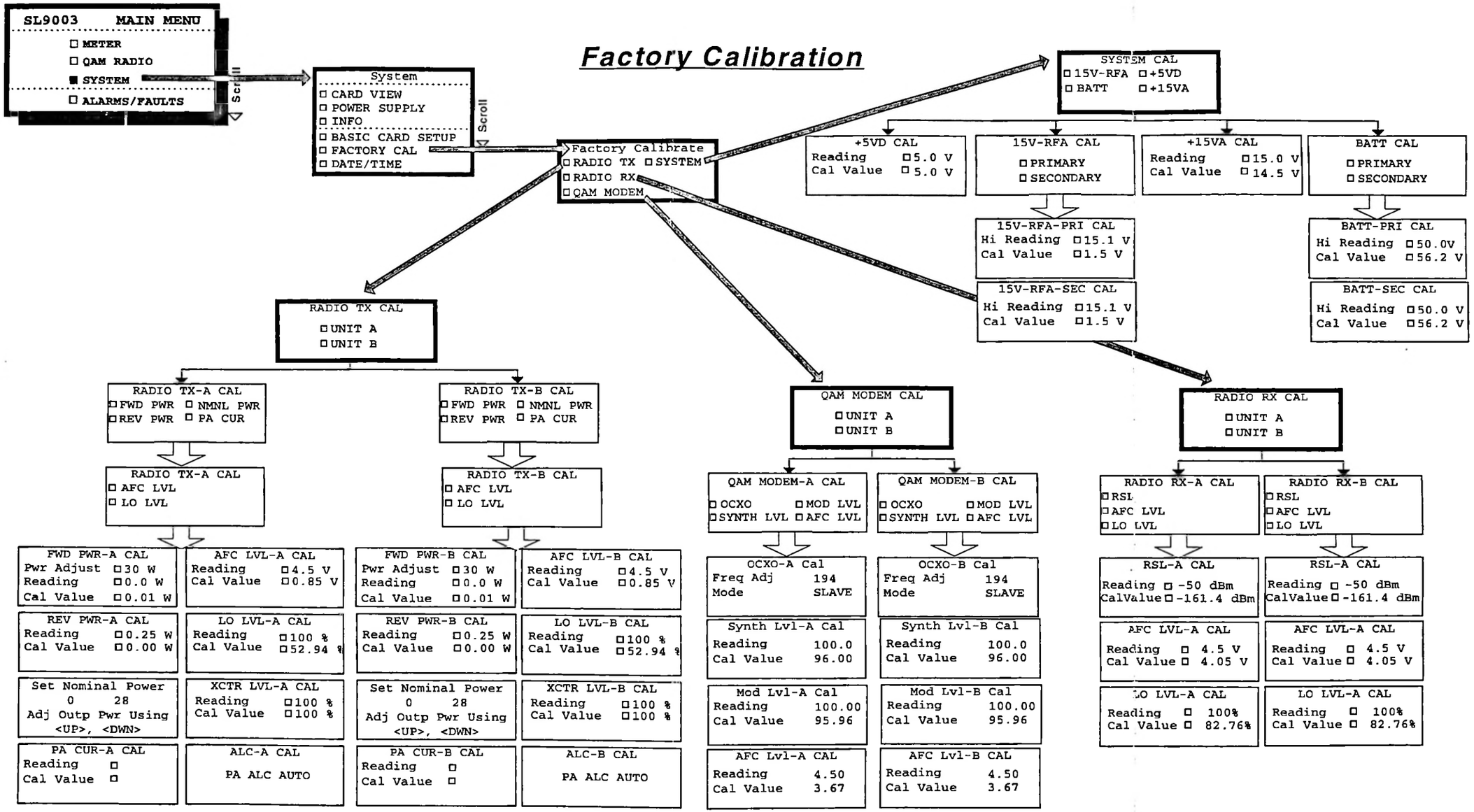

Note: "B" Module and "Secondary" calibrations are available only when redundant systems are configured.
"A" module and "Primary" screens are the default.

Figure 4-2c
SL9003Q SCREEN MENU TREE

This page is intentionally blank.

4.3.1 Main Menu

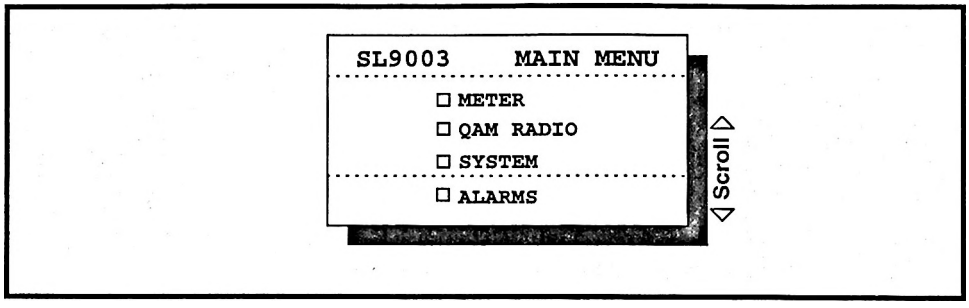

The main menu appears on system boot-up, and is the starting point for all screen navigation. Unlike most other screens in the software, the main menu scrolls up or down, one line item at a time.

4.3.2 Launch Screens

The **LAUNCH** screen allows the user to quickly get to a particular screen within a functional grouping in the unit. The logic is slightly different than other screens. Figure 4-3 contains a "Launch Screen Navigation Guide" to assist the user in locating the desired QAM Radio screen.

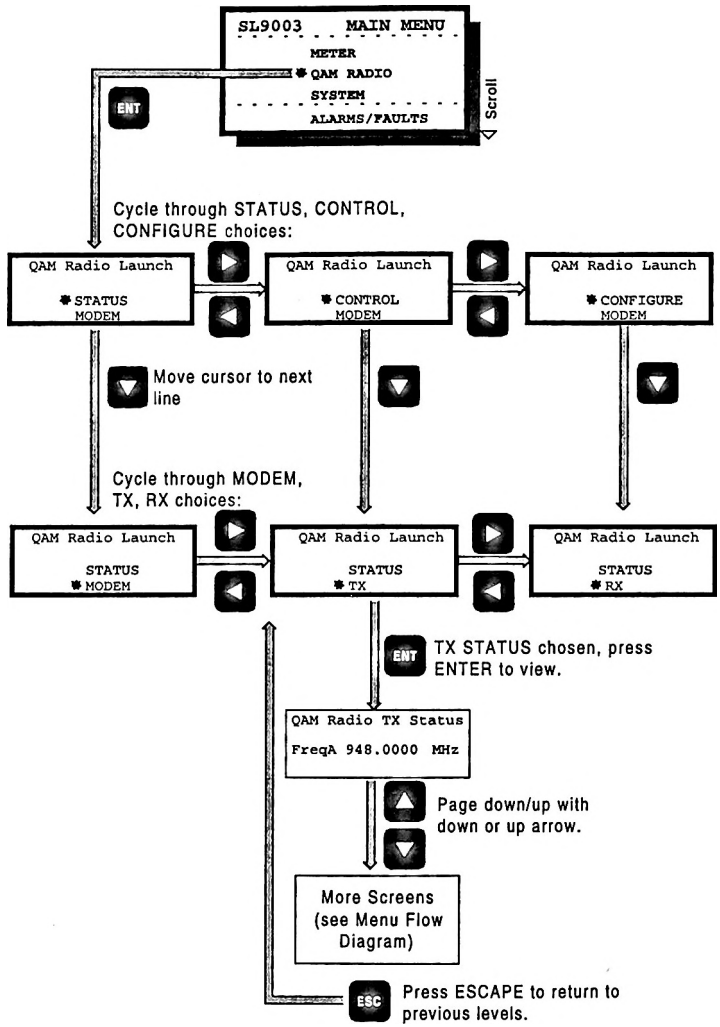

Figure 4-3
Launch Screen Navigation Guide

4.4 Screen Menu Summaries

The following tables and text provide a screen view for that topic as well as the functions and settings of that screen. The order follows the Screen Menu Tree (Figures 4-2 a, b, c) with the exception of the QAM Radio screens, which are grouped in the STATUS, CONTROL and CONFIGURE categories.

Outline of Section 4.4 (Screen Menu Summaries)

A summary of each function and the user manual location for additional information is also provided.

4.4.1 Meter

```
Meter

Bargraph   □DECDR 1
Backlight  □AUTO
```

Function	Settings	Summary
Bargraph	ENCDR1, 2, etc... DECDR1, 2, etc... OFF	Selects the desired audio source for display on the audio level bargraph Turns off the bargraph
Backlight	AUTO (*default*) OFF	LCD Backlight will turn off after 5 minutes if there is no button activity on the front panel. Backlight off always

4.4.2 System: Card View

```
Cards Active B.Addr
RF RXA              0
DECDR 1             1
ENCDR 1             2
```

```
Cards Active B.Addr
QAM MODEM A         3
RF TX A             4
MUX 0               5
```

Function	Settings	Summary
Cards Active	RF RXA DECDR 1 ENCDR 1 QAM MODEM A RF TX A MUX	QAM Receiver RF Module installed in QAM Radio "A" slots (base address 0) Audio Decoder #1 installed (base address 1) Audio Encoder #1 installed (base address 2) QAM Modem Module installed in QAM Radio "A" slots (base address 3) QAM Transmitter RF Module installed in QAM "A" slots (base address 4) Intelligent Multiplexer #0 installed (base address 5)

Note: The card view screen gives the user a list of all installed cards in the unit. The base address (B. Addr) is listed for diagnostic purposes only.

4.4.3 System: Power Supply

```
Power Supply
Primary      AC
+5VD         5.00  V
+15VD        15.0  V
```

Function	Settings	Summary
Primary	AC DC	Indicates type of supply in primary slot A: Universal AC input DC Option
+5 VD	0-9.99 V 5.20 V nominal	Voltage level of the main +5 volt supply
+15 VD	0-99.9 V 15.2 V nominal	Voltage level of the main +15 volt supply

4.4.4 System: Info

```
System Information

SECURITY     USER
FIRMWARE     Vx.xx
```

Function	Settings	Summary
SECURITY	Lockout User *(default)* Factory	Indicates access level of security: No control available Limited control of parameters Full configure and calibration
FIRMWARE	V x.xx	Revision of front panel screen menu software

4.4.5 System: Basic Card Setup

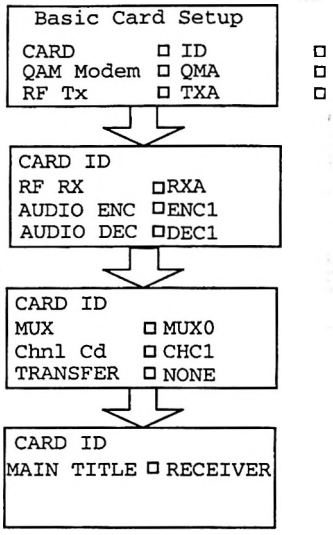

Function	Settings	Summary
QAM Modem	QMA, QMB	QAM Modem installed in QAM Radio slots A or B
RF Tx	TXA, TXB	QAM Transmitter installed in QAM Radio slots A or B
AUDIO ENC	ENC1,2,...	Audio Encoder installed and identified (affects meter selection of bargraph)
AUDIO DEC	DEC1,2,...	Audio Decoder installed and identified (affects meter selection of bargraph)
MUX	MUX 0,1,...	Mux Module installed and identified
Chnl Cd	CHC 1,2,...	Channel Card installed and identified
TRANSFER	NONE, INSTALLED	Identifies transfer functionality of redundant system is installed, directly related to QAM Radio A and B slot connections.
MAIN TITLE	TRANSMITTER, RECEIVER, TRANSCEIVER	Determines main menu display and affects screen menu selection of modules

Note: *These are factory settings of installed cards, used to control appropriate displays in the CARD VIEW screens.*

4.4.6 System: Date/Time

```
System Date
Day      □ 29
Month    □ 06
Year     □ 98
```

```
System Time
Hour     □ 15
Minutes  □ 35
Seconds  □ 48
```

Function	Settings	Summary
Day Month Year	01-31 01-12 00-99	Sets the system date used for NMS and Fault/Alarm logging After selection, press ENTER to save
Hour Minutes Seconds	00-23 00-59 00-59	Sets the system time used for NMS and Fault/Alarm logging After selection, press ENTER to save

4.4.7 Alarms

```
Alarm(s)
Total Alarms Since
 Reset-1
```

```
Alarm(s)
Rev Pwr > 0.25 W
15:20:24 6/29/98
```

Module	Parameter	Nominal	Trip Value	LED Status
QAM RF TX	Reverse Power	0.05 Watt	> 0.25 Watt	VSWR
	PA Current	2.5 Amp	> 3.0 Amp	
	LO Level	100%	< 50%	
	Exciter Level	100%	< 50%	
QAM RF RX	RSL	-30 to –90 dBm		SIGNAL
	LO Level	100%	< 50%	
QAM MODEM	BER	-	>1.00E-04	MOD/DEM LOCK
	Synth Level	100%	< 50%	MOD/DEM LOCK
Modulator only	Modem Level	100%	< 50%	MOD/DEM LOCK

Alarm definition: *A specific parameter is out of tolerance, but is NOT crucial for proper system operation. ALARMS are cautionary only, and indicates a degradation in a system parameter.*
Logging: *All fault and alarm events are logged with the date and time.*
Alarm screen reset: *After viewing the screen, press ENTER to clear all logs entries. If the alarm has been corrected, no new logs will be generated.*

4.4.8 Faults

```
Fault(s)

Total Faults Since
 Reset-1
```

```
Fault(s)

Fwd Pwr < 0.5 W
15:18:43 6/29/98
```

Module	Parameter	Nominal	Trip Value	LED Status
QAM RF TX	Forward Power	1.0 Watt	< 0.5 Watt	RADIATE
	AFC Lock	Lock	Unlock	AFC LOCK
	PA Temp	40 deg C	>80 deg C	
QAM RF RX	AFC Lock	Lock	Unlock	AFC LOCK
QAM MODEM	AFC Lock	Lock	Unlock	MOD/DEM LOCK
	Mbaud	Lock	Unlock	MOD/DEM LOCK
	Dbaud	Lock	Unlock	MOD/DEM LOCK
	Dfec	Lock	Unlock	MOD/DEM LOCK

Fault definition: *A specific parameter is out of tolerance and is crucial for proper system operation.*
Logging: *All fault and alarm events are logged with the date and time.*
Fault screen reset: *After viewing the screen, press ENTER to clear all logs entries. If the fault has been corrected, no new logs will be generated.*

4.4.9 QAM Modem Status

4.4.9.1 QAM Modulator Status

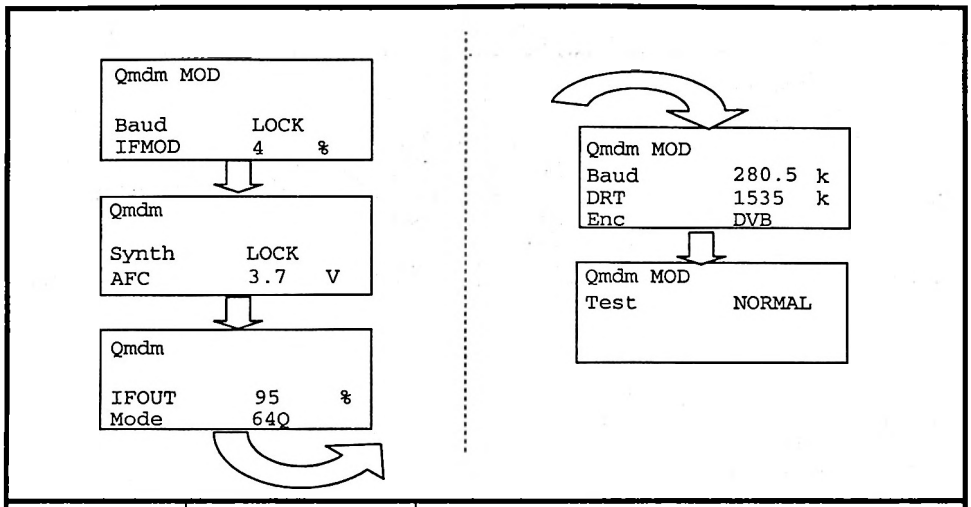

Function	Settings	Summary
BAUD	LOCK *(default)* UNLOCK	Indicates modulator PLL is locked to incoming data clock
IFMOD	0 – 100% 100% NOM	
SYNTH	LOCK *(default)* UNLOCK	Confirms 70 MHz IF synthesizer is phase locked
AFC	0 – 9.9 VDC 3.7 VDC *(nominal)*	70 MHz IF synthesizer AFC voltage
IFOUT	0 – 100% 100% *(nominal)*	Modulator level
Mode	16-64Q	Modulation mode:16QAM, 32QAM, 64QAM
BAUD	280.5 K	Symbol rate
DRT	1535 K	Data rate
ENC	DVB	Encoding mode
SPCTR	NRML	Spectrum Normal or Invert
FLTR	18 %	Nyquist filter
INTRL	3	Interleave Depth
TEST	NORMAL	Internal Test Pattern Generator

4.4.9.2 QAM Demodulator Status: BER

```
                -80 dBm
BER Post 0.00E+00
#Bits    0.0000E+00
#Errors  0.0000E+00
```

```
QAM Modem    -80 dBm
BER Pre  0.00E+00
#Bits    0.0000E+00
#Errors  0.0000E+00
```

Note: Received Signal Level displays in top right corner.

Function	Settings	Summary
BER Post	0.00E-00	Post-FEC (Forward Error Correction) Bit Error Rate since last "ENTER" reset
BER Pre	0.00E-00	Pre-FEC (Forward Error Correction) Bit Error Rate since last "ENTER" reset
# Bits	0.0000E+00	# of Bits counted since last "ENTER" reset
# Errors	0.0000E+00	# of Errors counted since last "ENTER" reset

4.4.9.3 QAM Demodulator Status: Other

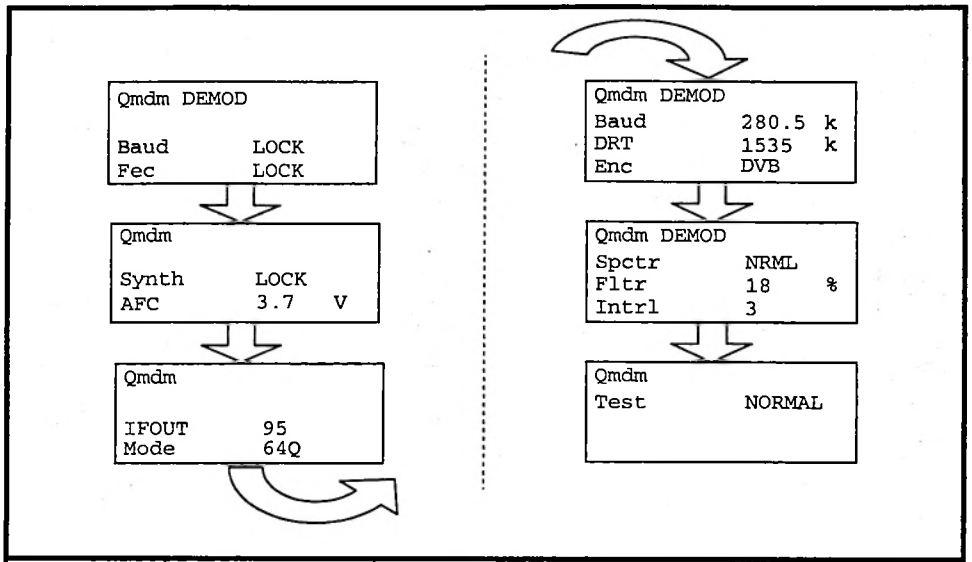

Function	Settings	Summary
BAUD	LOCK *(default)* UNLOCK	Indicates modulator PLL is locked to incoming data clock
FEC	LOCK *(default)* UNLOCK	Indicates FEC decoder is synchronized
SYNTH	LOCK *(default)* UNLOCK	Confirms 70 MHz IF synthesizer is phase locked
AFC	0 – 9.9 VDC 3.7 VDC *(nominal)*	70 MHz IF synthesizer AFC voltage
IFOUT	0 – 100% 100% NOM	Modulator level
Mode	64Q	Modulation mode 16QAM, 32QAM, 64QAM
BAUD	280.5 K	Symbol rate
DRT	1535 K	Data rate
ENC	DVB	Encoding mode
SPCTR	NRML	Spectrum Normal or Invert
FLTR	18 %	Nyquist filter
INTRL	3	Interleave Depth
TEST	NORMAL	Internal Test Pattern Generator

4.4.10 QAM Radio TX Status

```
QAM Radio TX Status

FreqA 948.0000  MHz
```

```
TX
Xmtr        FORC
Fwd         1.00  W
Rev         0.00  W
```

```
TX
PA Cur      2.04  A
Temp        45    C
SYNTH       LOCK
```

```
TX
AFC         3.8   VDC
LO          98.1  %
Xctr        93.3  %
```

Function	Settings	Summary
Freq A	948.0000 MHz	Displays the transmitter output carrier frequency
XMTR	TRAFFIC FORCED *(default)*	Status of transmitter: ON in a hot standby mode Forced ON
FWD	0 – 9.99 Watt 1.00 Watt *(nominal)*	Output Power of TX
REV	0 – 9.99 Watt 0.07 Watt *(nominal)*	Reverse (or reflected) power at antenna port
PA CUR	0.00– 9.99 Amp 2.40 Amp *(nominal)*	Power amplifier current consumption
TEMP	0– 99.9 deg C 45.0 deg C *(nominal)*	Power amplifier temperature
SYNTH	LOCK *(default)* UNLOCK	Indicates phase lock of the 1st LO
AFC	0 – 9.9 VDC 3.8 VDC *(nominal)*	1st LO PLL AFC Voltage
LO	0 – 99.9% 100% *(nominal)*	1st LO relative power level
XCTR	0 – 99.9% 100% *(nominal)*	Transmit module's relative output power level

4.4.11 QAM Radio RX Status

```
QAM Radio RX Status
FreqA 948.0000 MHz
```

```
RX
Rcvr        FORC
RSL        -80    dBm
Atten       AUTO
```

```
RX
SYNTH       LOCK
AFC         4.4   VDC
LO          96.6  %
```

Function	Settings	Summary
Freq A	948.0000 MHz	Displays the receiver operating frequency
XMTR	TRAFFIC FORCED *(default)*	Transfer status of receiver: Is operating, ready for transfer Is operating, will not transfer (forced ON)
RSL	-30.0 to -90.0 dBm	Received signal level (signal strength) Nominal level dependent upon customer path/system gain
ATTEN	AUTO *(default)* ON OFF	Receiver PIN attenuator setting: Controlled by internal software Forced ON Forced Off
SYNTH	LOCK *(default)* UNLOCK	Indicates phase lock of the 1st LO
AFC	0 – 9.9 VDC 4.5 VDC *(nominal)*	1st LO PLL AFC Voltage
LO	0 – 99.9% 100% *(nominal)*	1st LO relative power level

4.4.12 QAM Radio TX Control

```
QAM Radio TX Control

TX-A Radiate  □AUTO
```

Function	Settings	Summary
TX-A Radiate	AUTO *(default)* ON OFF	Transmitter radiating, but folds back output power on high antenna VSWR (REV PWR) Transmitter radiating Transmitter not radiating

4.4.13 QAM Radio RX Control

```
QAM Radio RX Control

RX-A Atten     □AUTO
```

Function	Settings	Summary
RX-A ATTEN	AUTO *(default)*	ON, and is activated on high signal level
	ON	ON *always*
	OFF	OFF

4.4.14 QAM Modem Configure

```
      QAM Modem
  Power On Default
Mode/Effic   □ 64Q/6
Memory       □  0

Data Rt   □ 1536  k
Intrlv    □      1
Spctrm    □ NRML
Fltr      □ 18%

Encode    □ DVB
Test      □ Normal
```

Function	Settings	Summary
DATA RATE	N x 64 kbps, 2048	Valid range depends upon configuration.
EFFICIENCY	QPSK, 16QAM, 32QAM, 64QAM, 128QAM, 256QAM	Default is 64QAM
Memory	0	Recall settings 0 to 5
INTERLEAVE	1,204 2,102 3, 68 *(default)* 4,51 6,34 12,17 17,12 34,6 51,4 68,3 102,2 204,1	Interleave depth. 1 to 204 valid for full duplex modem only " " " " "
SPECTRUM	NORMAL *(default)* INVERT	
FILTER	---- 18 15 *(default)* 12	Nyquist roll-off factor
ENCODING	DVB *(default)* DAVIC, BRCM, NO FEC	Raw data format
TEST	NORMAL *(default)* PBRS15, PBRS15M, PBRS23, PBRS23M	Test pattern length

4.4.15 QAM Radio TX Configure

```
QAM Radio TX Config

Freq   950.5000 MHz
```

Function	Settings	Summary
FREQ	950.5000 MHz	Displays the frequency of the transmitter and allows the user to make frequency changes.

4.4.16 QAM Radio RX Configure

```
QAM Radio RX Config

Freq   950.5000 MHz
```

Function	Settings	Summary
FREQ	950.5000 MHz	Displays the frequency of the receiver and allows the user to make frequency changes.

4.4.17 Factory Calibration

The Factory Calibration Screens are documented in Figure 4-2c (Screen Menu Tree). The user may refer to this diagram when instructed to do so by Moseley customer service technicians.

4.5 Intelligent Multiplexer PC Interface Software

The Intelligent Multiplexer is configured with a Windows-based PC software package. The hardware is accessed through the parallel port on the MUX back panel. A separate manual is available for operational details of this interface.

4.6 NMS/CPU PC Interface Software

The NMS/CPU card is configured with a Windows-based PC software package. The hardware is accessed through the serial port on the NMS card back panel. A separate manual is available for operational details of this interface.

This page is intentionally blank.

Section 5

Module Configuration

5.1 Introduction

This section provides the experienced user with detailed information concerning the board level switches, jumpers and test points that may be necessary for configuring or troubleshooting modules in the SL9003Q.

This information is provided for advanced users only, or can be used in conjunction with a call to our Technical Services personnel. Changing of these settings may render the system unusable, proceed with caution!

5.2 Audio Encoder/Decoder

Switch and jumper settings for the Audio Encoder and Audio Decoder are shown in Figures 5-1 and 5-2, respectively. The following sections will clarify the particular groupings of switches.

AES/EBU

S81-A	S81-B	S81-C	S81-D	S81-E	FORMAT
off	off	off	off	on	AES/EBU
on	on	off	off	off	SPDIF

S81-VERF	S81-ERF	AES Error Coding
on	off	Validity Bit & Error Flag
off	on	Error Flag Only

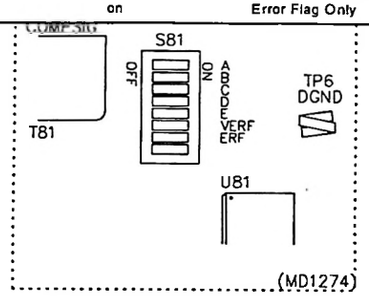

Analog In Card

U3/U6	Input Impedance
600	600 ohm
HI-Z	>10kohm**

U1/U4	dB Gain	Nominal Input Level
0	0	+10 dBu**
6	6	+4 dBu
20	20	-10 dBu
40	40	-30 dBu

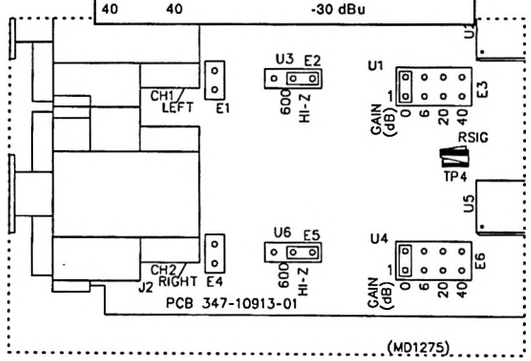

System Configuration

S52-1	S52-2	Compressed Config
off	off	MUX
on	on	Modem

S52-3	S52-4	Linear Config
off	off	MUX
on	on	Modem

M1	M2	Input Rate
off	off	44.1 k
off	on	48.0 k
on	off	32.0 k**
on	on	AES/EBU

M3	AES Mode
off	AES Master, A/D secondary**
on	no input switching (M1,M2 = rate)

M4	M5	M6	VCO Clk Src
off	off	off	input mode
off	off	on	intrnl osc
off	on	off	trunk cmprsd
off	on	on	trunk linear
on	off	off	reserved
on	off	on	reserved
on	on	off	mux bus cmprsd
on	on	on	mux bus linear

M7	M8	Linear Rate
off	off	44.1 k
off	on	48.0 k
on	off	32.0 k**
on	on	reserved

R1	R2	SRC source
off	off	AES/EBU**
off	on	A/D in
on	off	zeroes
on	on	sine

R3	Bus Master Clock
off	receive clk from mux bus**
on	supply clk to mux bus

R4	Aux RS232 Data
off	disable
on	enable**

R5	R6	2/4 Channel Select
off	off	2 chnl**
off	on	reserved
on	off	4 chnl master (1st pair)
on	on	4 chnl slave (2nd pair)

R7	9001 LEDs & Metering
off	Disable/Ft Pnl select**
on	Enable/Forced on (9001)

R8	Debug
off	Normal**
on	Debug

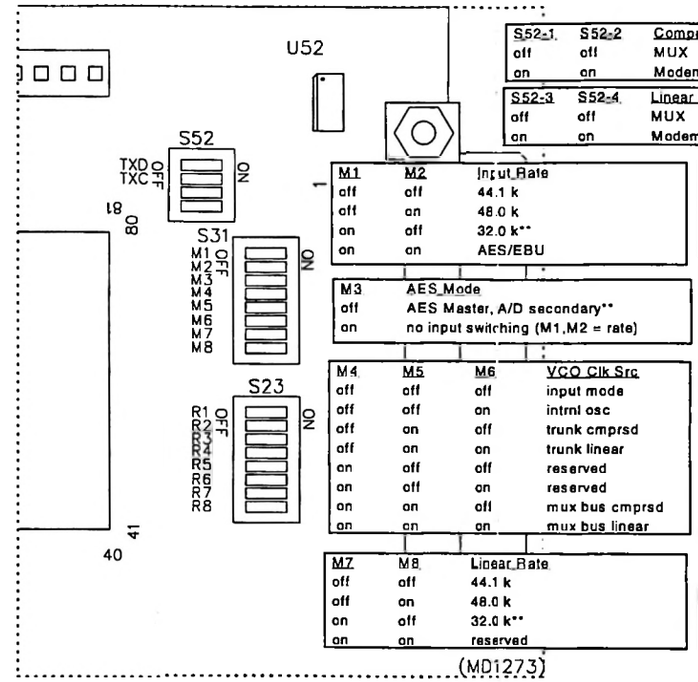

Data Channel

D1	D2	# of Aux Data Bits[1]
off	off	6 (6N/5E/50)
off	on	7 (7N/6E/60)
on	off	8 (8N/7E/70)**
on	on	9 (9N/8E/80)

[1] (assumes 1 start and 1 to 2 stop bits)

D3	D4	D5	Aux Baud Rate
off	off	off	300
off	off	on	600
off	on	off	1200**
off	on	on	2400
on	off	off	4800
on	off	on	9600[1]
on	on	off	19200[1]
on	on	on	38400[1]

[1] (requires use of *CTS line)

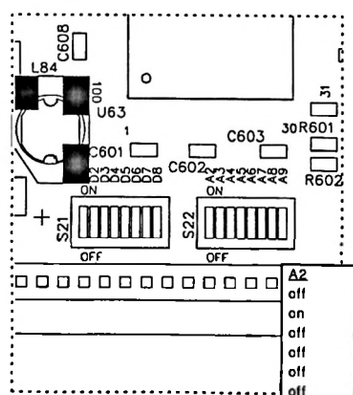

Board ID

A2	A3	A4	A5	A6	A7	A8	A9	Board#	Base Addr.
off	off	off	off	off	off	off	off	0	0
on	off	off	off	off	off	off	off	1	4
off	on	off	off	off	off	off	off	2	8
off	off	on	off	off	off	off	off	3	16
off	off	off	on	off	off	off	off	4	32
off	off	off	off	on	off	off	off	5	64
off	off	off	off	off	on	off	off	6	128
off	off	off	off	off	off	on	off	7	256
off	off	off	off	off	off	off	on	8	512

Figure 5-1
Audio Encoder
Switch and Jumper Settings

AES/EBU

S81-A	S81-B	S81-C	S81-D	FORMAT
on	on	off	off	AES/EBU
off	off	on	on	SPDIF

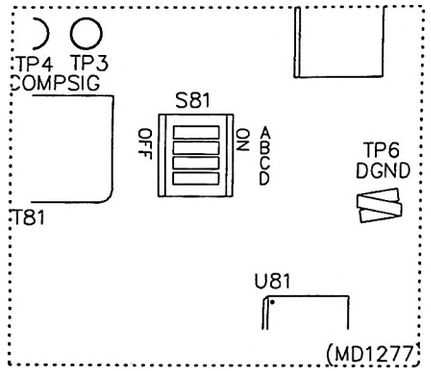

Analog Out Card

E2/E3/E7/E8	Output Impedance
LO	<50 ohms
600	600 ohms

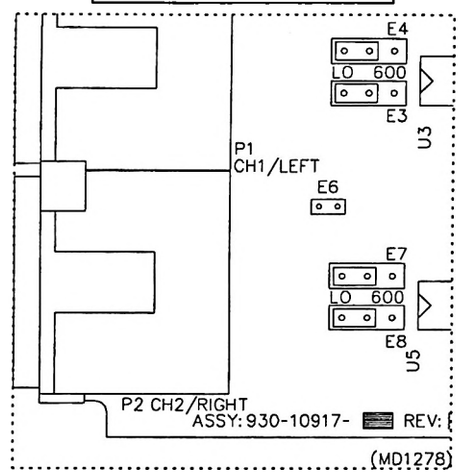

System Configuration

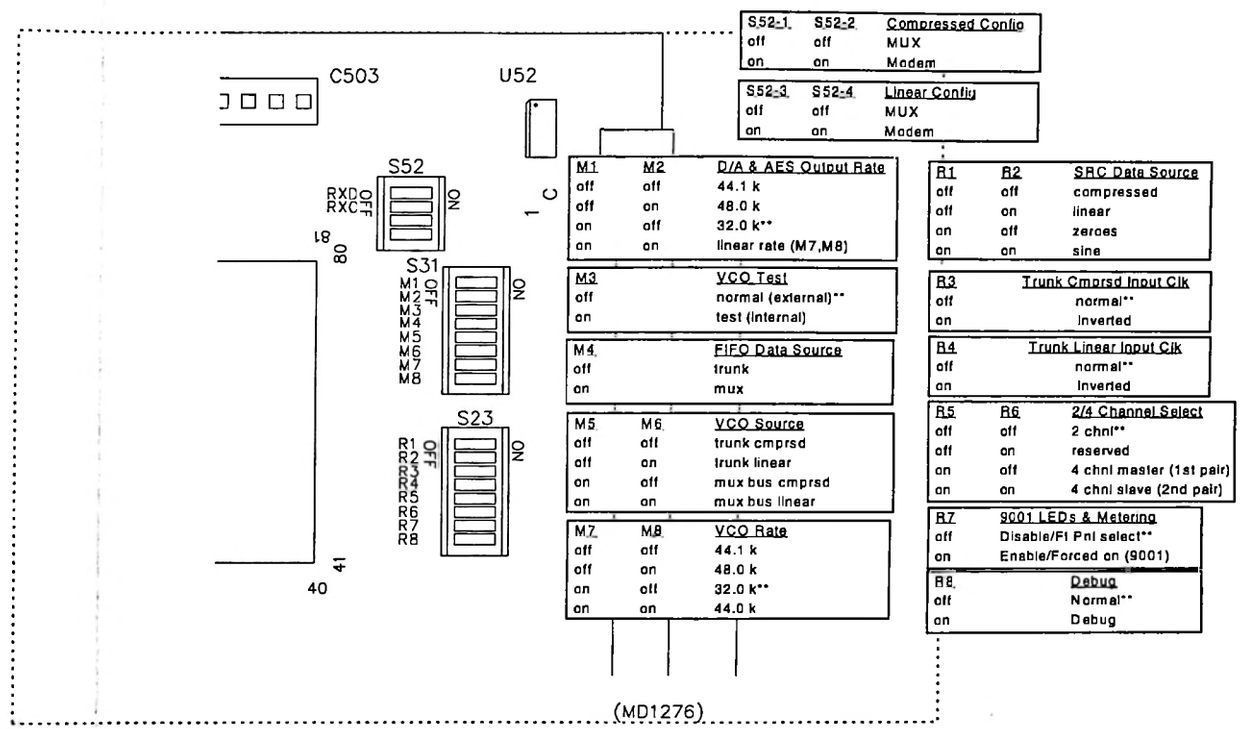

S52-1	S52-2	Compressed Config
off	off	MUX
on	on	Modem

S52-3	S52-4	Linear Config
off	off	MUX
on	on	Modem

M1	M2	D/A & AES Output Rate
off	off	44.1 k
off	on	48.0 k
on	off	32.0 k**
on	on	linear rate (M7,M8)

M3	VCO Test
off	normal (external)**
on	test (internal)

M4	FIFO Data Source
off	trunk
on	mux

M5	M6	VCO Source
off	off	trunk cmprsd
off	on	trunk linear
on	off	mux bus cmprsd
on	on	mux bus linear

M7	M8	VCO Rate
off	off	44.1 k
off	on	48.0 k
on	off	32.0 k**
on	on	44.0 k

R1	R2	SRC Data Source
off	off	compressed
off	on	linear
on	off	zeroes
on	on	sine

R3	Trunk Cmprsd Input Clk
off	normal**
on	Inverted

R4	Trunk Linear Input Clk
off	normal**
on	Inverted

R5	R6	2/4 Channel Select
off	off	2 chnl**
off	on	reserved
on	off	4 chnl master (1st pair)
on	on	4 chnl slave (2nd pair)

R7	9001 LEDs & Metering
off	Disable/Fl Pnl select**
on	Enable/Forced on (9001)

R8	Debug
off	Normal**
on	Debug

Data Channel

D1	D2	# of Aux Data Bits[1]
off	off	6 (6N/5E/50)
off	on	7 (7N/6E/60)
on	off	8 (8N/7E/70)**
on	on	9 (9N/8E/80)

[1] (assumes 1 start and 1 to 2 stop bits)

D3	D4	D5	Aux Baud Rate
off	off	off	300
off	off	on	600
off	on	off	1200**
off	on	on	2400
on	off	off	4800
on	off	on	9600[1]
on	on	off	19200[1]
on	on	on	38400[1]

[1] (requires use of *CTS line)

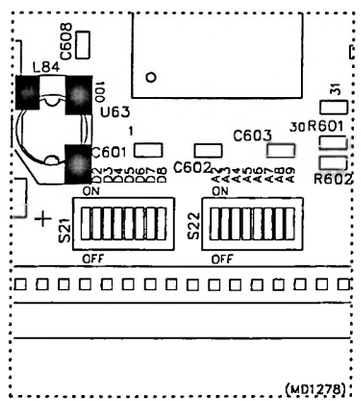

Board ID

A2	A3	A4	A5	A6	A7	A8	A9	Board#	Base Addr.
off	off	off	off	off	off	off	off	0	0
on	off	off	off	off	off	off	off	1	4
off	on	off	off	off	off	off	off	2	8
off	off	on	off	off	off	off	off	3	16
off	off	off	on	off	off	off	off	4	32
off	off	off	off	on	off	off	off	5	64
off	off	off	off	off	on	off	off	6	128
off	off	off	off	off	off	on	off	7	256
off	off	off	off	off	off	off	on	8	512

Figure 5-2
Audio Decoder
Switch and Jumper Settings

5.2.1 AES/EBU and SPDIF

Switch S81 configures the digital audio input (Encoder) or output (Decoder) for the AES/EBU "professional" standard (3 wire XLR balanced) or SPDIF "consumer" standard (2 wire unbalanced). The AES/EBU setting is the factory default. The following wiring shown in Figures 5-3 through 5-6 should be followed for the proper level and phasing:

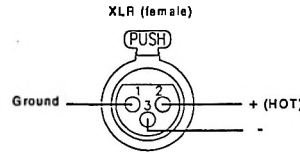

Figure 5-3. AES/EBU-XLR Encoder Connection

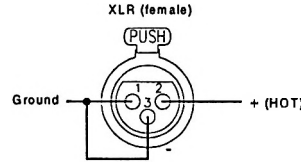

Figure 5-4. SPDIF-XLR Encoder Connection

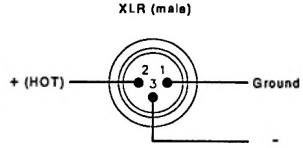

Figure 5-5. AES/EBU-XLR Decoder Connection

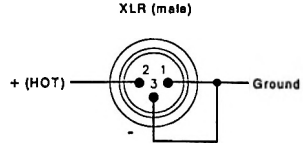

Figure 5-6. SPDIF-XLR Decoder Connection

5.2.2 Analog Audio Gain and Input Impedance

Encoder (Analog In Card):

Jumpers E2 and E5 set the left and right channel input impedance. HI-Z is default (shown) and the user may set it to 600 ohm for external equipment compatibility.

Jumpers E3 and E6 set the gain for the analog input stage. 0 dB is default (shown) and the user may set the unit for up to 40 dB of additional gain if the external equipment has a low output level.

Decoder (Analog Out Card):

Jumpers E3/E4 and E7/E8 set the left and right channel output impedance. LO-Z is default (shown) and the user may set it to 600 ohm for external equipment compatibility.

5.2.3 Data Channel Rate

Switch S21 sets up the data channel parameters for the card. Follow the charts in the figure for details of the settings. Figure 5-7 below details the serial data connection:

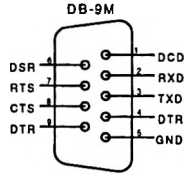

Figure 5-7. Data Channel Connector- DSUB (9-pin)

5.2.4 Board ID

Switch S22 sets the Board ID number and Base Address. These are not to be changed by the user.

5.2.5 System Configuration

Switches S23, S31, and S52 set the board configuration for operation in the system. These are not to be changed by the user.

5.3 QAM Modulator/Demodulator

There are no user adjustments on this card. All calibrations are factory-set, and configuration settings are controlled remotely by software (via the front panel or serial port).

5.4 IF Card Upconverter/Downconverter

There are no user adjustments on this card. All calibrations are factory-set, and configuration settings are controlled remotely by software (via the front panel or serial port).

5.5 Transmit/Receiver Module (RF Up/Downconverter)

The only user adjustment on this module is the AFC (Automatic Frequency Control) level that centers the tuning range for the 1st LO PLL.

5.5.1 AFC Level—TX

It is possible to change the carrier frequency of the transmitter (via the front panel) within a +/- 1 MHz range without adjustment of the AFC level.

If it is desired to change the frequency greater than 1 MHz, but less than 10 MHz, it is necessary to adjust the TX AFC level on the Transmit Module. This is accomplished as follows:

1. Power down the transmitter and remove the two small semi-rigid cables attached to the "TO PA" and "70 MHz IN" connectors. It will be necessary to loosen both ends of each cable to successfully remove them.

2. Loosen the two thumbscrews that secure the module to the chassis, and pull to remove the module from the unit. It may take some strong pulling to get it out.

3. Insert the QAM Radio Extender Card until it is seated into the backplane connector, then insert the Transmitter Module into the Extender Card.

4. Power-up the unit and navigate the LCD screens as follows:

Interleave = 12

```
QAM Radio Launch

  □ CONFIGURE
  □ TX
```

```
QAM Radio TX Config

Freq   944.5000 MHz
```

1. Using the cursors, change to the desired frequency. Press ENTER and the TX will most likely lose AFC LOCK.

2. Navigate the LCD screens to monitor the AFC voltage as follows

```
QAM Radio Launch

  □ STATUS
  □ TX
```

```
TX
AFC        4.5   VDC
LO         50    %
Xctr       50    %
```

1. Depending on the "direction" that the frequency is moved, the voltage will read either 0.00 or 9.99 VDC. While monitoring this voltage, adjust the TX AFC on the Transmit Module (using a very small flat blade screwdriver) until the voltage reads 4.5 +/- .25 VDC.

2. The TX should achieve AFC LOCK and the operation is successful.

5.5.2 AFC Level—RX

It is possible to change the operating frequency of the receiver (via the front panel) within a +/- 1 MHz range without adjustment of the AFC level.

If it is desired to change the frequency greater than 1 MHz, but less than 10 MHz, it is necessary to adjust the RX AFC level on the Receiver Module. This is accomplished as follows:

1. Power down the receiver and remove the two small semi-rigid cables attached to the "RF IN" and "70 MHz OUT" connectors. It will be necessary to loosen both ends of each cable to successfully remove them.

2. Loosen the two thumbscrews that secure the module to the chassis, and pull to remove the module from the unit. It may take some strong pulling to get it out.

3. Insert the QAM Radio Extender Card until it is seated into the backplane connector, then insert the Receiver Module into the Extender Card.

4. Power-up the unit and navigate the LCD screens as follows:

```
QAM Radio Launch

  □ CONFIGURE
  □ RX
```

```
QAM RADIO RX Config

Freq   944.5000 MHz
```

1. Using the cursors, change to the desired frequency. Press ENTER and the RX will most likely lose AFC LOCK.

2. Navigate the LCD screens to monitor the AFC voltage as follows

```
QAM Radio Launch

  □ STATUS
  □ RX
```

```
RX
SYNTH        LOCK
AFC           4.5  VDC
LO           100   %
```

1. Depending on the "direction" that the frequency is moved, the voltage will read either 0.00 or 9.99 VDC. While monitoring this voltage, adjust the RX AFC on the Transmit Module (using a very small flat blade screwdriver) until the voltage reads 4.5 +/- .25 VDC.

2. The RX should achieve AFC LOCK and the operation is successful.

5.6 Power Amplifier

There are no user adjustments on this module.

5.7 MUX Module

There are no user adjustments on this card. All calibrations are factory-set, and configuration settings are controlled remotely by software (via the front panel or parallel port).

5.8 NMS/CPU Module

There are no user adjustments on this card. All calibrations are factory-set, and configuration settings are controlled remotely by software (via the front panel or serial port).

Section 6

Customer Service

6.1 Introduction

Moseley Associates will assist its product users with difficulties. Most problems can be resolved through telephone consultation with our technical service department. When necessary, factory service may be provided. If you are not certain whether factory service of your equipment is covered, please check your product Warranty/Service Agreement.

Do not return any equipment to Moseley without prior consultation.

The solutions to many technical problems can be found in our product manuals; please read them and become familiar with your equipment.

We invite you to visit our Internet web site at **http://www.moseleysb.com/** .

6.2 Technical Consultation

Please have the following information available prior to calling the factory:

- Model number and serial number of unit;
- Shipment date or date of purchase of an Extended Service Agreement;
- Any markings on suspected subassemblies (such as revision level); and
- Factory test data, if applicable.

Efficient resolution of your problem will be facilitated by an accurate description of the problem and its precise symptoms. For example, is the problem intermittent or constant? What are the front panel indications? If applicable, what is your operating frequency?

Technical consultation is available at (805) 968-9621 from 8:00 a.m. to 5:00 p.m., Pacific Time, Monday through Friday. During these hours a technical service representative who knows your product should be available. If the representative for your product is busy, your call will be returned as soon as possible. Leave your name, station call letters if applicable, type of equipment, and telephone number(s) where you can be reached in the next few hours.

Please understand that, in trying to keep our service lines open, we may be unable to provide "walk-through" consultation. Instead, our representative will usually suggest the steps to resolve your problem; try these steps and, if your problem remains, do not hesitate to call back.

After-Hours Emergencies

Emergency consultation is available through the same telephone number from 5:00 p.m. to 10:00 p.m. Pacific Time, Monday to Friday, and from 8:00 a.m. to 10:00 p.m. Pacific Time on weekends and holidays. Please do not call during these hours unless you have

an emergency with installed equipment. Our representative will not be able to take orders for parts, provide order status information, or assist with installation problems.

6.3 Factory Service

Arrangements for factory service should be made only with a Moseley technical service representative. You will be given a Return Authorization (RA) number. This number will expedite the routing of your equipment directly to the service department. Do not send any equipment to Moseley Associates without an RA number.

When returning equipment for troubleshooting and repair, include a detailed description of the symptoms experienced in the field, as well as any other information that well help us fix the problem and get the equipment back to you as fast as possible. Include your RA number inside the carton.

If you are shipping a complete chassis, all modules should be tied down or secured as they were originally received. On some Moseley Associates equipment, printing on the underside or topside of the chassis will indicate where shipping screws should be installed and secured.

Ship equipment in its original packing, if possible. If you are shipping a subassembly, please pack it generously to survive shipping. Make sure the carton is packed fully and evenly without voids, to prevent shifting. Seal it with appropriate shipping tape or nylon-reinforced tape. Mark the outside of the carton "Electronic Equipment - Fragile" in large red letters. Note the RA number clearly on the carton or on the shipping label, and make sure the name of your company is listed on the shipping label. Insure your shipment appropriately. All equipment must be shipped prepaid.

The survival of your equipment depends on the care you take in shipping it.

Address shipments to:

MOSELEY ASSOCIATES, INC.

Attn: Technical Services Department
111 Castilian Drive
Santa Barbara, CA 93117

Moseley Associates, Inc. will return the equipment prepaid under Warranty and Service Agreement conditions, and either freight collect or billed for equipment not covered by Warranty or a Service Agreement.

6.4 Field Repair

Some Moseley Associates equipment will have stickers covering certain potentiometers, varicaps, screws, and so forth. Please contact Moseley Associates technical service department before breaking these stickers. Breaking a tamperproof sticker may void your warranty.

When working with Moseley's electronic circuits, work on a grounded antistatic surface, wear a ground strap, and use industry-standard ESD control.

Try to isolate a problem to a module or to a specific section of a module. Then compare actual wave shapes and voltage levels in your circuit with any shown on the block and level diagrams or schematics. These will sometimes allow the problem to be traced to a component.

Spare Parts Kits

Spare parts kits are available for all Moseley Associates products. We encourage the purchase of the appropriate kits to allow self-sufficiency with regard to parts. Information about spares kits for your product may be obtained from our sales department or technical service department.

Module Exchange

When it is impossible or impractical to trace a problem to the component level, replacing an entire module or subassembly may be a more expedient way to correct the problem. Replacement modules are normally available at Moseley Associates for immediate shipment. Arrange delivery of a module with our technical services representative. If the shipment is to be held at your local airport with a telephone number to call, please provide an alternate number as well. This can prevent unnecessary delays.

Field Repair Techniques

If an integrated circuit is suspect, carefully remove the original and install the new one, observing polarity. Installing an IC backward may damage not only the component itself, but the surrounding circuitry as well. ICs occasionally exhibit temperature-sensitive characteristics. If a device operates intermittently, or appears to drift, rapidly cooling the component with a cryogenic spray may aid in identifying the problem.

If a soldered component must be replaced, do the following:

- Use a 40W maximum soldering iron with an 1/8-inch maximum tip. Do not use a soldering gun. Excessive heat can damage components and the printed circuit. Surface mount devices are especially heat sensitive, and require a lower power soldering iron. If you are not experienced with surface mount components, we suggest that you do not learn on critical equipment.

- Remove the solder from the component leads and the printed circuit pads. Solder wicking braid or a vacuum de-solderer is useful for this. Gently loosen the component leads and extract the component from the board.

- Form the leads of the replacement component to fit easily into the circuit board pattern.

- Solder each lead of the component to the bottom side of the board, using a good brand of rosin-core solder. We recommend not using water soluble flux, particularly in RF portions of the circuit. The solder should flow through the hole and form a fillet on both sides. Fillets should be smooth and shiny, but do not overheat the component trying to obtain this result.

- Trim the leads of the replacement component close to the solder on the pad side of the printed circuit board with a pair of diagonal cutters.

- Completely remove all residual flux with a cotton swab moistened with flux cleaner.

- For long term quality, inspect each solder joint – top and bottom – under a magnifier and rework solder joints to meet industry standards. Inspect the adjacent components soldered by the Moseley Associates production line for an example of high reliability soldering.

This page is intentionally blank.

Section 7

System Description

7.1 Introduction

The SL9003Q consists of a transmitter (TX) and receiver (RX) pair of units that are matched in frequency and modulation/demodulation characteristics. The following sections describe the TX system, RX system, followed by sub-system components. Please reference the accompanying block diagrams for reference and clarification.

We will follow the typical end-to-end progression of a radio system starting with the TX baseband inputs, to the QAM modulator, followed by the upconversion process and the power amplifier. We then proceed to the RX preamplifier input, the downconversion process, followed by the QAM demodulator and baseband outputs.

7.2 Transmitter

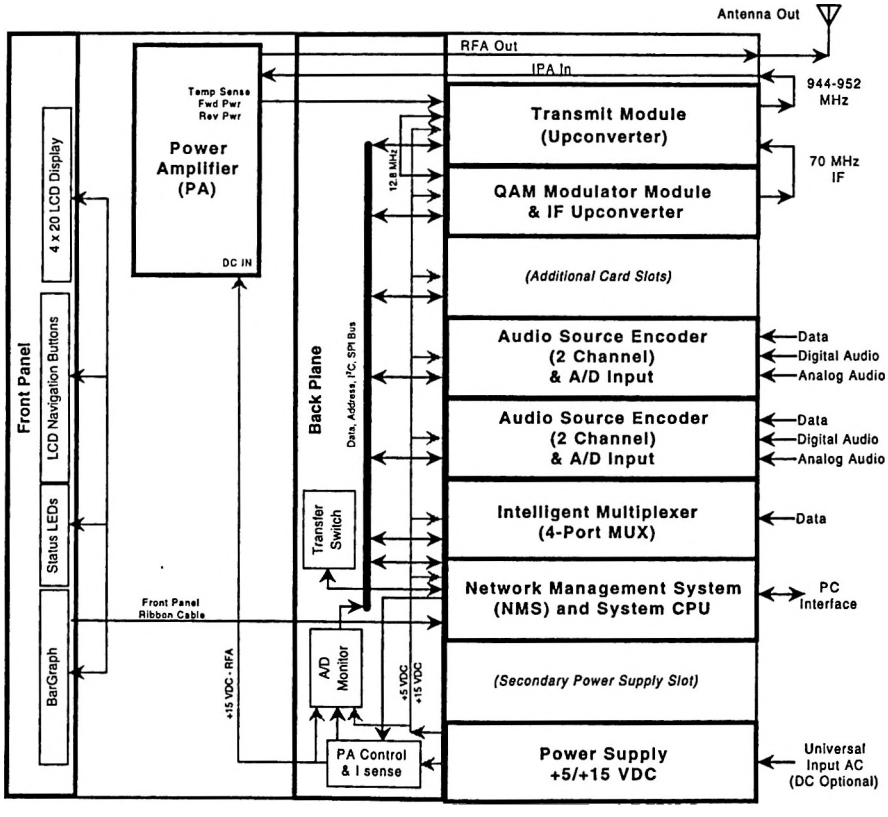

Figure 7-1. SL9003Q Transmitter System Block Diagram

The SL9003Q TX is a modular digital radio transmitter system that operates in the 950 MHz band and provides simplex data transmission up to 2.048 Mbps increments in 8 kbps steps. The block diagram in Figure 7-1 shows operational block partitions that also represent the physical partitions within the system.

All modules (excluding the Front Panel and Power Amplifier) are interconnected via the backplane which traverses the entire width of the unit. The backplane contains the various communication buses as well as the PA (Power Amplifier) control and redundant transfer circuitry. The power supply levels and status are monitored on the backplane and the NMS/CPU card processes the data.

The NMS/CPU card incorporates microprocessor and FPGA logic to configure and monitor the overall operation of the system via front panel controls, LCD screen menus, status LEDs and the bargraph display. Module settings are loaded into the installed cards and power-up default settings are stored in non-volatile memory. LCD screen menu software is uploaded into memory, providing field upgrade capability. A Windows-based PC interface is available for connection at the rear panel DATA port.

7.2.1 Audio Encoder

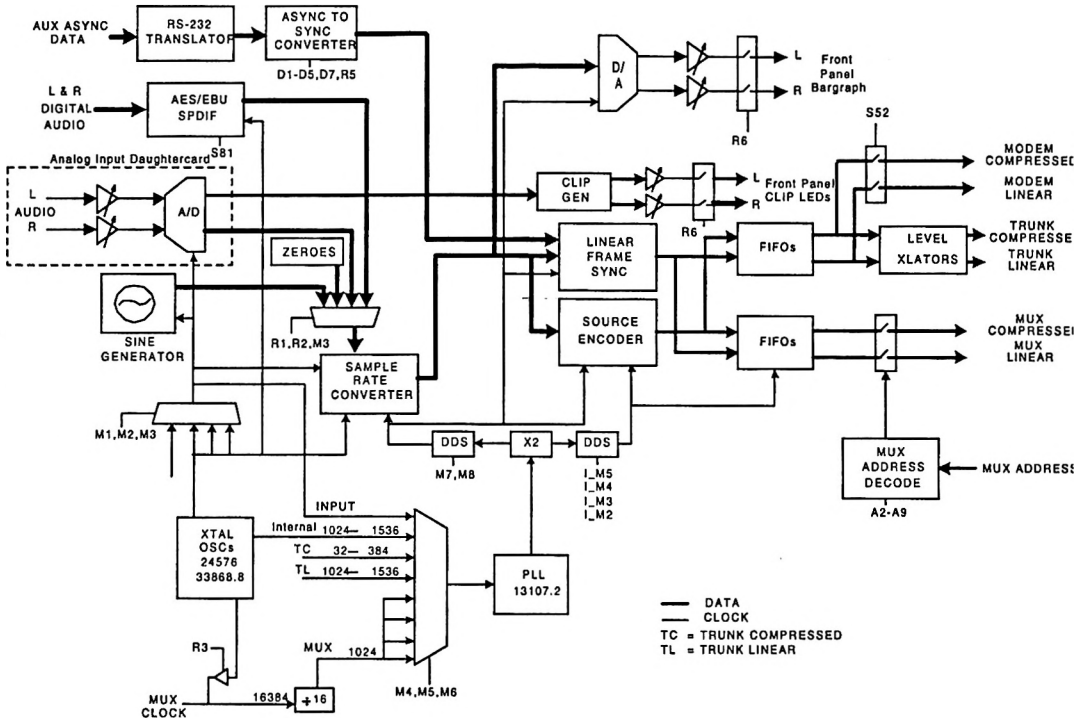

Figure 7-2. Audio Encoder Block Diagram

The Audio Encoder module directly receives and decodes the AES/EBU digital audio into a digital stereo audio data stream. Optionally, the analog audio inputs can be used (located on the Analog Input daughtercard), and these inputs are converted to 16 bit digital stereo data. The SRC (sample rate converter) passes the digital audio data stream to a data multiplexer while synchronizing/converting the incoming sample rate (30-50 kHz) to the internal sample rate clock (32, 44.1, 48 kHz selectable). For example, data could be provided by a CD player at 44.1 kHz, while the internal sample rate to be transmitted across the link is at 32 kHz (the default rate).

The digital audio is optionally compressed (using MPEG or ADPCM) in the Audio Encoder module to allow for higher bandwidth efficiency (more audio channels per RF channel) at the expense of aural masking compression disadvantages. However, some users may require the compression algorithm for existing system compatibility.

Sine wave and "zeroes" test signal generators are available on the card (switch selectable) for system testing. The stereo D/A converter transforms the signal back to

analog for use in monitoring the signal from the front panel. This conveniently allows for level monitoring of the digital AES/EBU audio inputs on the bar graph.

The digital audio data (linear or compressed) and the auxiliary data channel are subsequently coded into a single data stream. In a 2 channel system, this data stream is sent to the QAM Modulator module directly.

7.2.2 Intelligent Multiplexer

In a 4 channel system, two Audio Encoders provide two data streams to the Intelligent Multiplexer (MUX). The MUX frames and multiplexes the data to form an aggregate data stream for the QAM Modulator. The MUX can also provide additional data channels for the link, multiplexed into the aggregate data stream.

7.2.3 QAM Modulator/IF Upconverter Daughter Card

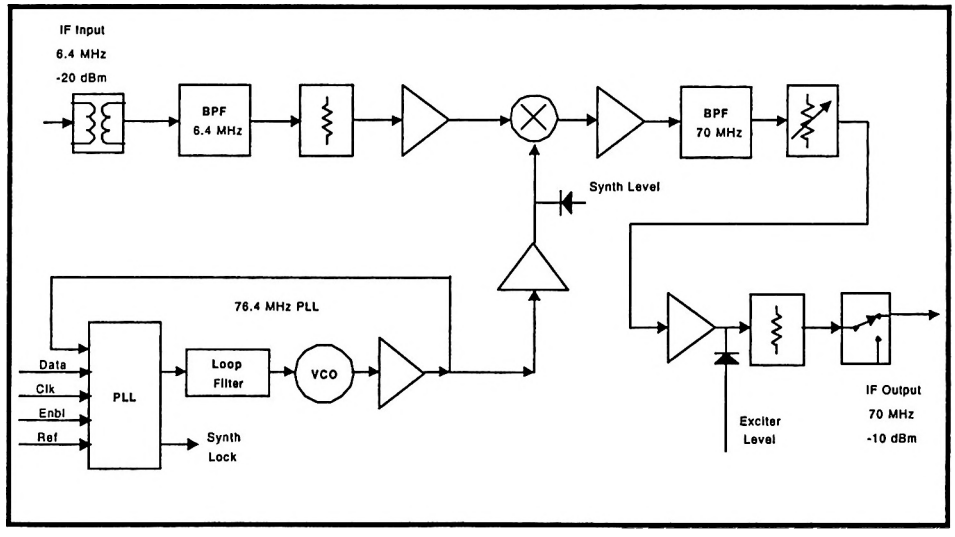

Figure 7-3. IF Upconverter Daughter Card Block Diagram

The QAM (Quadrature Amplitude Modulation) Modulator accepts the aggregate data stream via the backplane. The module performs up to 64 QAM (6 bits/symbol) modulation at a carrier frequency of 6.4 MHz, adding FEC (Forward Error Correction) bits while interleaving the blocks of data. The result is a very spectrally efficient, yet robust linear modulation scheme. This process requires an ultra-stable master clock provided by an OCXO (oven controlled crystal oscillator) that is accurate to within 0.1 ppm.

The resultant carrier is translated up to 70 MHz by the IF Upconverter daughter card (located in the same module). This is accomplished by a standard mixing of the carrier with a phase-locked LO. A 70 MHz SAW filter provides an exceptional, spectrally-clean output signal.

7.2.4 Transmit Module

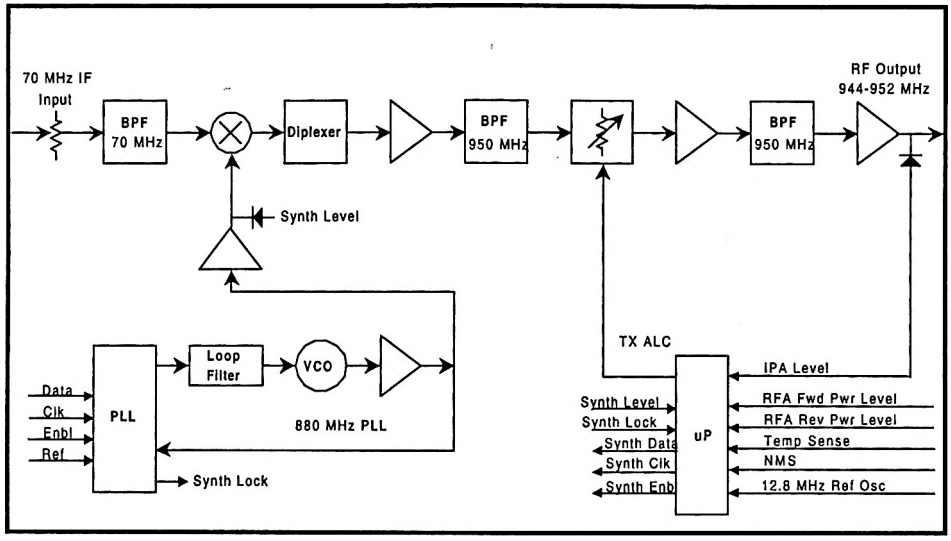

Figure 7-4. Transmit Module Block Diagram

The RF output carrier of the IF Upconverter is fed to the Transmit Module via an external (rear panel) semi-rigid SMA cable. This module performs the necessary upconversion to the 950 MHz carrier. There is an on-board CPU for independent control of the critical RF parameters of the system.

Since this is a linear RF processing chain, an automatic leveling control loop (ALC) is implemented here to maintain maximum available power output (and therefore maximum system gain). The ALC monitors the PA forward power (FWD) output sample, and controls the Transmit Module gain per an algorithm programmed in the CPU. The ALC also controls the power-up RF conditions of the transmitter output.

7.2.5 Power Amplifier

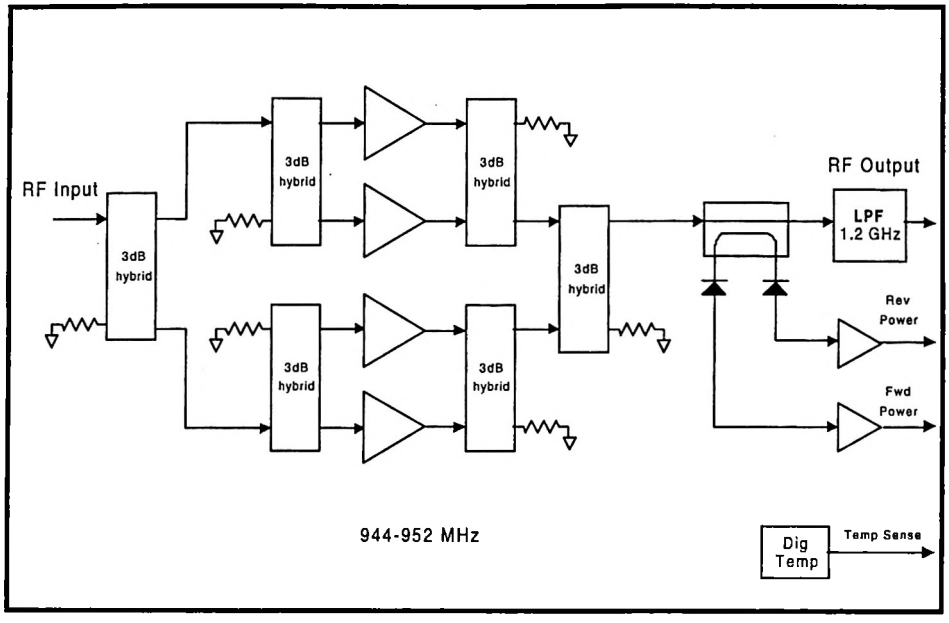

Figure 7-5. SL9003Q RF Power Amplifier Block Diagram

The Power Amplifier (PA) is a separate module that is mounted to a heatsink and is fan-cooled for reliable operation. The PA is a design for maximum linearity in an amplitude modulation-based system. The "divide and combine" design is inherently stable and well-matched even when looking at an adverse antenna impedance mismatch. The amplifier utilizes gain modules that are easily replaceable, and if one amplifier does fail, the link will still perform at a reduced power level. This provides a built-in redundancy for the PA, which is traditionally the weak link of any microwave radio system.

7.3 Receiver

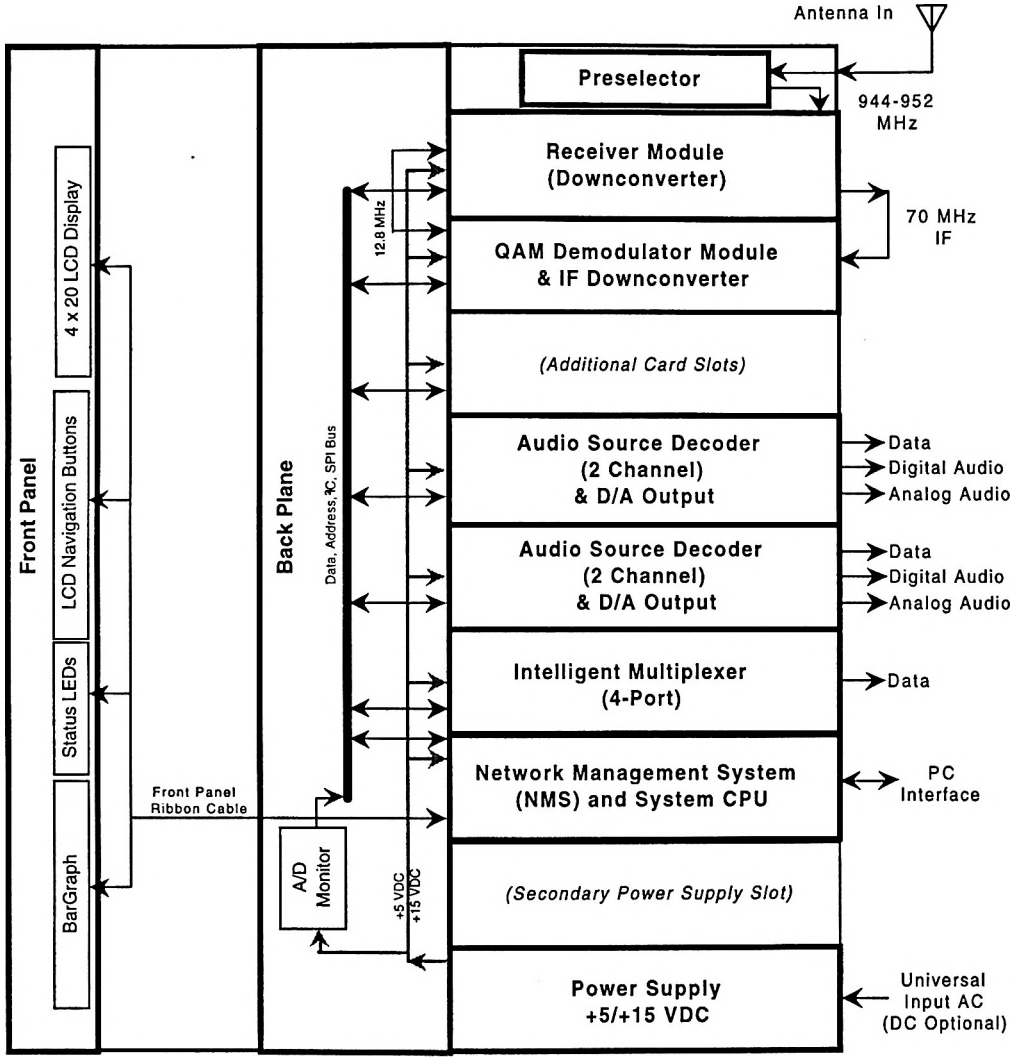

Figure 7-6. SL9003Q Receiver System Block Diagram

The SL9003Q RX is a modular digital radio receiver system that operates in the 950 MHz band and provides simplex data transmission up to 2.048 Mbps increments in 8 kbps steps. The block diagram in Figure 7-6 shows operational block partitions that also represent the physical partitions within the system.

All modules (excluding the Front Panel and Power Amplifier "PA") are interconnected via the Backplane which traverses the entire width of the unit. The Backplane contains the various communication buses as well as the redundant transfer circuitry. The power supply levels and status are monitored and the NMS/CPU card processes the data.

The NMS/CPU card incorporates microprocessor and FPGA logic to configure and monitor the overall operation of the system via front panel controls, LCD screen menus, status LEDs and the bar graph display. Module settings are loaded into the installed cards and power-up default settings are stored in non-volatile memory. LCD screen menu software is uploaded into memory, providing field upgrade capability. A Windows-based PC interface is available for connection at the rear panel DATA port.

7.3.1 Receiver Module

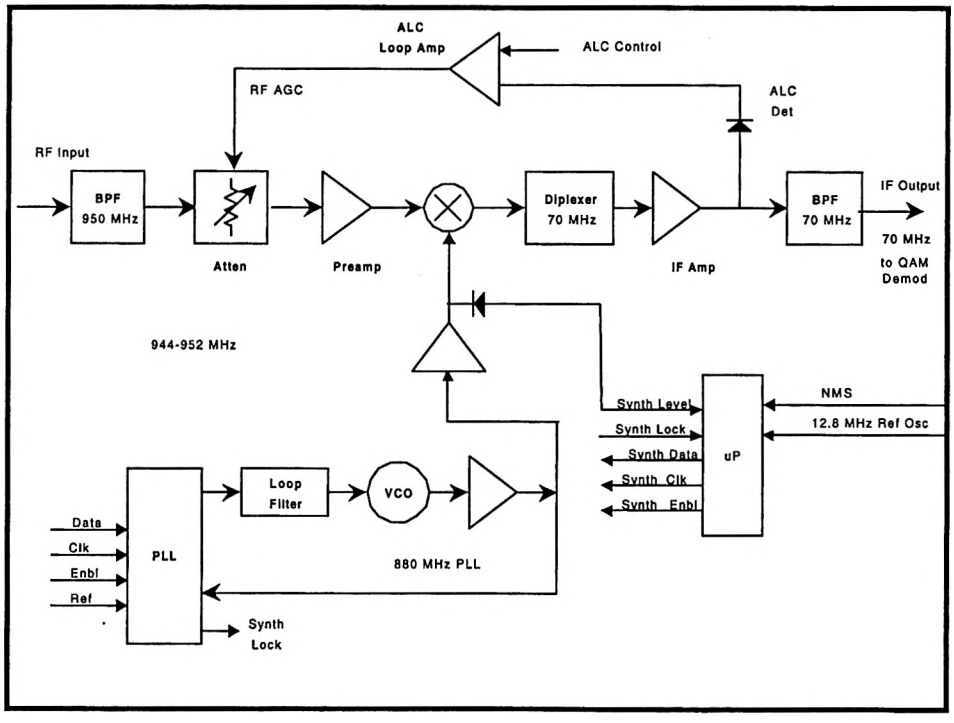

Figure 7-7. Receiver Module Block Diagram

The receiver handles the traditional RF to IF conversion from the 950 MHz band to 70 MHz. Considerations are given to image rejection, intermodulation performance, dynamic range, agility, and survivability. A separate AGC loop was assigned to the RF front end to prevent intermodulation and saturation problems associated with reception

of high level undesirable interfering RF signals resulting from RF bandwidth that is much wider than the IF bandwidth. The linear QAM scheme is fairly intolerant of amplifier overload. These problems are typically related to difficult radio interference environments that include high power pagers, cellular phone sites, and vehicle location systems.

7.3.2 QAM Demodulator/IF Downconverter Daughter Card

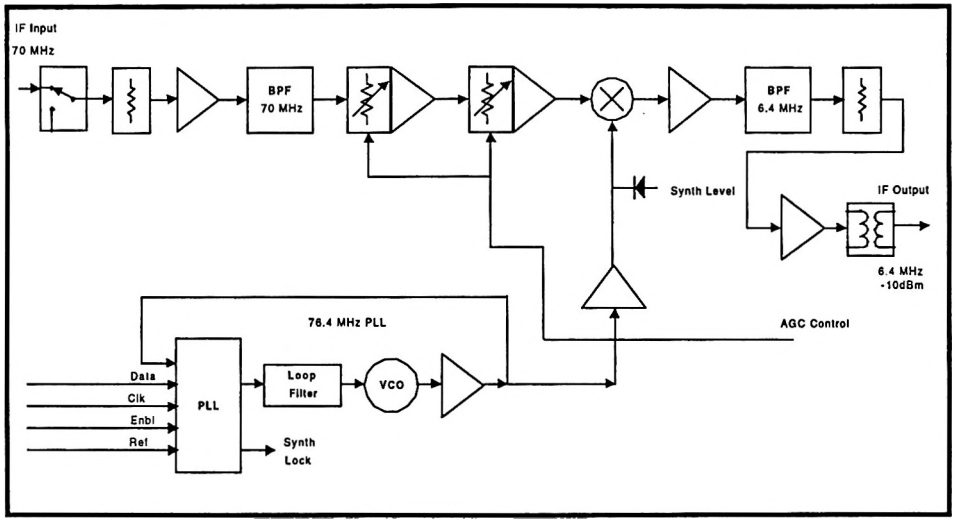

Figure 7-8. SL9003Q IF Downconverter Daughter Card Block Diagram

The QAM (Quadrature Amplitude Modulation) Demodulator module consists of an IF Downconverter and a QAM Demodulator card.

The IF Downconverter receives the 70 MHz carrier from the Receiver Module via an external semi-rigid cable and directly converts the carrier to 6.4 MHz by mixing with a low-noise phase-locked LO. System selectivity is achieved through the use of a 70 MHz SAW filter.

The QAM Demod receives and demodulates the 6.4 MHz carrier. The demodulation process includes the FEC implementation and de-interleaving that matches the QAM modulator in the transmitter, and the critical "data assisted recovery" of the clock. This process requires an ultra-stable master clock provided by an OCXO (oven controlled crystal oscillator) that is accurate to within 0.1 ppm.

The output is an aggregate data stream that is distributed to either the MUX (4 channel) or the Audio Decoder (2 channel) via the backplane.

7.3.3 Intelligent Multiplexer

In a 4 channel system, the MUX de-multiplexes the aggregate data stream, from the QAM Modulator, into its separate components, typically providing two data streams to the two Audio Decoders. The MUX can also de-multiplex any other data that was added to the data stream in the link, directing these to the data channels on the MUX card I/O.

7.3.4 Audio Decoder

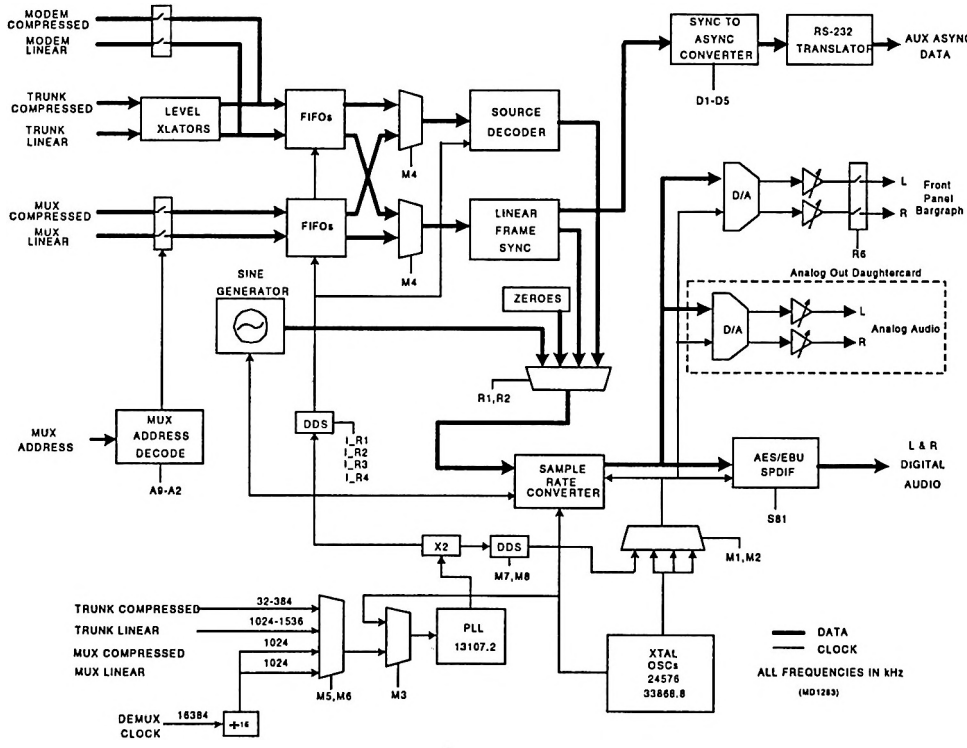

Figure 7-9. Audio Decoder Block Diagram

The Audio Decoder module accepts the data stream and the recovered clock from the backplane (QAM Demod or the MUX). This data (compressed or linear) is fed to the FIFOs (First In. First Out) buffers. The data is then passed through the FIFOs to an

initial data multiplexer. Sine wave and "zeros" test signal generators are available on the card (switch selectable) for system testing.

Compressed: The audio decoder add-on card decodes the compressed data per the appropriate algorithm (ISO/MPEG or Apt-X). This decoded information is then passed on to the Sample Rate Converter (SRC) via a second data multiplexer.

Linear: Using embedded coding, the linear inputs received are analyzed and then synchronized for transmission to the Sample Rate Converter via a second data multiplexer.

The second data multiplexer chip selects which of the three inputs (Compressed Audio Decoder, Linear Frame Sync, or Internal Sine Generator) will be sent to the SRC. As an option, zeros can also be sent through the multiplexer chip to test the noise floor.

The SRC receives the data stream via the second data multiplexer. This information is compared to the clock rate determined at switches M7 and M8 for conversion to the final output decoding segment.

From the SRC, the data is bussed to the AES/EBU encoder for left and right digital audio output, to the 16 bit D/A converter (located on the Analog Out daughtercard) for the main analog channel outputs, and to a 12 bit D/A converter that provides an analog output to the bargraph monitor on the front panel.

The clock source provides the ability to synchronize the various components of the system with a single device, such as the on-board crystal oscillator, the internal multiplexer clock, the bus, the AES/EBU input, the trunk, etc. The user can determine whether the card will generate its own clock or whether it will use a different source's clock as reference. This information is then sent to the SRC for conversion of the incoming data to the rate of desired output.

Appendices

Appendix A

Path Evaluation Information

A.1 Introduction

A.1.1 Line of Site

For the proposed installation sites, one of the most important immediate tasks is to determine whether line-of-site is available. The easiest way to determine line-of-site is simply to visit one of the proposed antenna locations and look to see that the path to the opposite location is clear of obstructions. For short distances, this may be done easily with the naked eye, while sighting over longer distances may require the use of binoculars. If locating the opposing site is difficult, you may want to try using a mirror, strobe light, flag, weather balloon or compass (with prior knowledge of site coordinates).

A.1.2 Refraction

Because the path of a radio beam is often referred to as line-of-site, it is often thought of as a straight line in space from transmitting to receiving antenna. The fact that it is neither a line, nor is the path straight, leads to the rather involved explanations of its behavior.

A radio beam and a beam of light are similar in that both consist of electromagnetic energy; the difference in their behavior is principally due to the difference in frequency. A basic characteristic of electromagnetic energy is that it travels in a direction perpendicular to the plane of constant phase; i.e., if the beam were instantaneously cut at right angle to the direction of travel, a plane of uniform phase would be obtained. If, on the other hand, the beam entered a medium of non-uniform density and the lower portion of the beam traveled through the denser portion of the medium, its velocity would be less than that of the upper portion of the beam. The plane of uniform phase would then change, and the beam would bend downward. This is refraction, just as a light beam is refracted when it moves through a prism.

The atmosphere surrounding the earth has the non-uniform characteristics of temperature, pressure, and relative humidity, which are the parameters that determine the dielectric constant, and therefore the velocity of radio wave propagation. The earth's atmosphere is therefore the refracting medium that tends to make the radio horizon appear closer or farther away.

A.1.3 Fresnel Zones

The effect of obstacles, both in and near the path, and the terrain, has a bearing on the propagation of radio energy from one point to another. The nature of these effects depends upon many things, including the position, shape, and height of obstacles, nature of the terrain, and whether the effects of concern are primary or secondary effects.

Primary effects, caused by an obstacle that blocks the direct path, depend on whether it is totally or partially blocking, whether the blocking is in the vertical or the horizontal plane, and the shape and nature of the obstacle.

The most serious of the secondary effects is reflection from surfaces in or near the path, such as the ground or structures. For shallow angle microwave reflections, there will be a 180° (half wavelength) phase shift at the reflection point. Additionally, reflected energy travels farther and arrives later, directly increasing the phase delay. The difference in distance traveled by the direct waves and the reflected waves, expressed in wavelengths of the carrier frequency, is added to the half wavelength delay caused by reflection. Upon arrival at the receiving antenna, the reflected signal is likely to be out of phase with the direct signal, and may tend to add to or cancel the direct signal. The extent of direct signal cancellation (or augmentation) by a reflected signal depends on the relative powers of the direct and the reflected signals, and on the phase angle between them.

Maximum augmentation will occur when the signals are exactly in phase. This will be the case when the total phase delay is equal to one wavelength (or equal to any integer multiple of the carrier wavelength); this will also be the case when the distance traveled by the reflected signal is longer than the direct path by an odd number multiple of one-half wavelength. Maximum cancellation will occur when the signals are exactly out of phase, or when the phase delay is an odd multiple of one-half wavelength, which will occur when the reflected waves travel an integer multiple of the carrier wavelength farther than the direct waves. Note that the first cancellation maximum on a shallow angle reflective path will occur when the phase delay is one and one-half wavelengths, caused by a path one wavelength longer than the direct path.

The direct radio path, in the simplest case, follows a geometrically straight line from transmitting antenna to receiving antenna. However, geometry shows that there exist an infinite number of points from which a reflected ray reaching the receiving antenna will be out of phase with the direct rays by exactly one wavelength. In ideal conditions, these points form an ellipsoid of revolution, with the transmitting and receiving antennas at the foci. This ellipsoid is defined as the first Fresnel zone. Any waves reflected from a surface that coincides with a point on the first Fresnel zone, and received by the receiving antenna, will be exactly in phase with the direct rays. This zone should not be violated by intruding obstructions, except by specific design amounts. The first Fresnel zone, or more accurately the first Fresnel zone radius, is defined as the perpendicular distance from the direct ray line to the ellipsoidal surface at a given point along the microwave path. It is calculated as follows:

$$F_1 = 2280 \times [(d_1 \times d_2) / (f \times (d_1 + d_2))]^{1/2} \text{ feet}$$

Where,

d_1 and d_2 = distances in statute miles from a given point on a microwave path to the ends of the path (or path segment).
f = frequency in MHz.
F_1 = first Fresnel zone radius in feet.

There are in addition, of course, the second, third, fourth, etc. Fresnel zones, and these may be easily computed, at the same point along the microwave path, by multiplying the first Fresnel zone radius by the square root of the desired Fresnel zone number. All odd numbered Fresnel zones are additive, and all even numbered Fresnel zones are canceling.

A.1.4 K Factors

The matter of establishing antenna elevations to provide minimum fading would be relatively simple was it not for atmospheric effects. The antennas could easily be placed at elevations somewhere between free space loss and first Fresnel zone clearance over the predominant surface or obstruction, reflective or not, and the transmission would be expected to remain stable. Unfortunately, the effective terrain clearance changes, due to changes in the air dielectric with consequent changes in refractive bending.

As described earlier, the radio beam is almost never a precisely straight line. Under a given set of meteorological conditions, the microwave ray may be represented conveniently by a straight line instead of a curved line if the ray is drawn on a fictitious earth representation of radius K times that of earth's actual radius. The **K factor** in propagation is thus the ratio of effective earth radius to actual earth radius. The K factor depends on the rate of change of refractive index with height and is given as:

$$K = 157/157 + dN/dh$$

Where,

N is the radio refractivity of air.
dN/dh is the gradient of N per kilometer.

The **radio refractivity** of air for frequencies up to 30 GHz is given as:

$$N = (77.6P/T) + (3.73 \times 10^5)(e/T^2)$$

Where,

P = total atmospheric pressure in millibars.
T = absolute temperature in degrees Kelvin.
e = partial pressure of water vapor in millibars.

The P/T term is frequently referred to as the "dry" term and the e/T^2 term as the "wet" term.

K factors of 1 are equivalent to no ray bending, while K factors above 1 are equivalent to ray bending away from the earth's surface and K factors below 1 (earth bulging) are equivalent to ray bending towards the earth's surface. The amount of **earth bulge** at a given point along the path is given by:

$$h = (2d_1 x d_2)/3K$$

Where,

h = earth bulge in feet from the flat-earth reference.
d_1 = distance in miles (statute) from a given end of the microwave path to an arbitrary point along the path.
d_2 = distance in miles (statute) from the opposite end of the microwave path to the same arbitrary point along the path.
K = K-factor considered.

Three K values are of particular interest in this connection:

1. Minimum value to be expected over the path. This determines the degree of "earth bulging" and directly affects the requirements for antenna height. It also establishes the lower end of the clearance range over which reflective path analysis must be made, in the case of paths where reflections are expected.

2. Maximum value to be expected over the path. This leads to greater than normal clearance and is of significance primarily on reflective paths, where it establishes the upper end of the clearance range over which reflective analysis must be made.

3. Median or "normal" value to be expected over the path. Clearance under this condition should be at least sufficient to give free space propagation on non-reflective paths. Additionally, on paths with significant reflections, the

clearance under normal conditions should not fall at or near an even Fresnel zone.

For most applications the following criteria are considered acceptable:

$K = 1.33$ and $CF = 1.0\ F_1$

$K = 1.0$ and $CF = 0.6\ F_1$

$K = 0.67$ and $CF = 0.3\ F_1$

Where CF is the Fresnel zone clearance and F_1 is the first Fresnel zone radius.

A.1.5 Path Profiles

Using ground elevation information obtained from the topographical map, a path profile should be prepared using either true earth or 4/3 earth's radius graph paper. To obtain a clear path, all obstacles in the path of the rays must be cleared by a distance of 0.6 of the first Fresnel zone radius. Be sure to include recently erected structures, such as buildings, towers, water tanks, and so forth, that may not appear on the map. Draw a straight line on the path profile clearing any obstacle in the path by the distance determined above. This line will then indicate the required antenna and/or tower height necessary at each end. If it is impossible to provide the necessary clearance for a clear path, a minimum clearance of 30 feet should be provided. Any path with less than 0.6 first Fresnel zone clearance, but more than 30 feet can generally be considered a grazing path.

A.2 Path Analysis

A.2.1 Overview

Path analysis is the means of determining the system performance as a function of the desired path length, required equipment configuration, prevailing terrain, climate, and characteristics of the area under consideration. The path analysis takes into account these parameters and yields the net system performance, referred to as **path availability** (or **path reliability**). Performing a path analysis allows you to specify the antenna sizes required to achieve the required path availability.

A path analysis is often the first thing done in a feasibility study. The general evaluation can be performed before expending resources on a more detailed investigation.

The first order of business for performing a path analysis is to complete a balance sheet of **gains** and **losses** of the radio signal as it travels from the transmitter to the receiver. "Gain" refers to an increase in output signal power relative to input signal power, while "loss" refers to signal attenuation, or a reduction in power level ("loss" does not refer to total interruption of the signal). Both gains and losses are measured in **decibels** (dB and dBm), the standard unit of signal power.

The purpose of completing the balance sheet is to determine the power level of the received signal as it enters the receiver electronics—in the absence of multipath and rain fading; this is referred to as the **unfaded received signal level**. Once this is known, the **fade margin** of the system can be determined. The fade margin is the difference between the unfaded received signal level and the **receiver sensitivity** (the minimum signal level required for proper receiver operation).

The fade margin is the measure of how much signal attenuation due to multipath and rain fading can be accommodated by the radio system while still achieving a minimum level of performance. In other words, the fade margin is the safety margin against loss of transmission, or transmission **outage**.

A.2.2 Losses

Although the atmosphere and terrain over which a radio beam travels have a modifying effect on the loss in a radio path, there is, for a given frequency and distance, a characteristic loss. This loss increases with both distance and frequency. It is known as the **free space loss** and is given by:

$$A = 96.6 + 20 log_{10} F + 20 log_{10} D$$

Where,

A = free space attenuation between isotropics in dB.
F = frequency in GHz.
D = path distance in miles.

A.2.3 Path Balance Sheet/System Calculations

A typical form for recording the gains and losses for a microwave path is shown in Section A.2.7. Recall that the purpose of this tabulation is to determine the **fade margin** of the proposed radio system. The magnitude of the fade margin is used in subsequent calculations of path availability (up time).

The following instructions will aid you in completing the Path Calculation Balance Sheet (see Section A.2.7):

Instructions

A. Line 1. Enter the power output of the transmitter in dBm. Examples: 5w = +37.0 dBm, 6.5w = +38.0 dBm, 7w = +38.5 dBm, 8w = +39.0 dBm (dBm = 30 + 10 Log P_O [in watts]). For the standard 9003Q, enter +30 dBm for 64 QAM and +33 dBm for 16 QAM operation.

B. Lines 2 & 3. Enter Transmitter and Receiver antenna gains over an isotropic source. Refer to the Antenna Gain table below for the power gain of the

antenna. Note: If the manufacturer quotes a gain in dBd (referred to a dipole), dBi is approximately dBd +1.1 dB.

Table A-1
Typical Antenna Gain

ANTENNA TYPE	450 MHz BAND	950 MHz BAND
5 element Yagi	12 dBi	12 dBi
Paraflector	16 dBi	20 dBi
4' Dish* (1.2 m)	13 dBi	19 dBi
6' Dish* (1.8 m)	17 dBi	23 dBi
8' Dish* (2.4 m)	19 dBi	25 dBi
10' Dish* (3.0 m)	22 dBi	27 dBi

C. Line 4. Total lines 1, 2, and 3, and enter here. This is the total gain in the proposed system.

D. Line 5. Enter amount of free space path loss as determined by the formula given in Section A.2.2, or see the table below.

Table A-2
Free Space Loss

DISTANCE	450 MHz	950 MHz
5 Miles (8 km)	104 dB	110 dB
10 Miles (16 km)	110 dB	116 dB
15 Miles (24 km)	114 dB	120 dB
20 Miles (32 km)	116 dB	122 dB
25 Miles (40 km)	118 dB	124 dB
30 Miles (48 km)	120 dB	126 dB

E. Line 6. Enter the total transmitter transmission line loss. Typical losses can be found in Table A-3.

Table A-3
Transmission Line Loss

FREQUENCY BAND	LDF4-50 (per 100 meters)	LDF5-50 (per 100 meters)
330 MHz	4.6 dB	2.4 dB
450 MHz	5.5 dB	2.9 dB
470 MHz	5.7 dB	3.0 dB
950 MHz	8.3 dB	4.6 dB

F. Line 7. Enter the total receiver transmission line loss (see Table A-3 above).

G. Line 8. Enter the total connector losses. A nominal figure of -0.5 dB is reasonable (based on 0.125 dB/mated pair).

H. Line 9. Enter all other miscellaneous losses here. Such losses might include power dividers, duplexers, diplexers, isolators, isocouplers, and the like. Losses are 1.5 dB per terminal. These only apply for full duplex systems.

Table A-4
Branching Losses

System Type	TX Loss	RX Loss	Total Loss
Non-Standby Full Duplex Terminal (400 MHz)	1.2	1.2	2.4
Hot Standby Full Duplex Terminal (400 MHz)	1.2	4.2	5.4
Non-Standby Full Duplex Terminal (900 MHz)	1.5	1.5	3.0
Hot Standby Full Duplex Terminal (900 MHz)	1.5	4.5	6.0

I. Line 10. Enter obstruction losses due to knife-edge obstructions, etc.

J. Line 11. Total lines 5 to 10 and enter here. This is the total loss in the proposed system.

K. Line 12. Enter the total gain from line 4.

L. Line 13. Enter the total loss from line 11.

M. Line 14. Subtract line 13 from line 12. This is the unfaded signal level to be expected at the receiver. (Convert from dBm to microvolts here for reference).

N. Line 15. Using the information found in Table A-5 below, enter here the minimum signal required for 1x10E-4 BER.

Table A-5
Typical Received Signal Strength required for BER of 1x10E-4*

Data Rate Configuration	High Sensitivity 16 QAM	High Efficiency 64 QAM
2 Chnl, 1024 kbps	-93 dBm	-89 dBm
2 Chnl, 1536 kbps	-91.5 dBm	-87.5 dBm
4 Chnl, 1536 kbps	-91.5 dBm	-87.5 dBm
4 Chnl, 2048 kbps	-90 dBm	-86 dBm

* Excludes all branching losses

O. Line 16. Subtract line 15 from line 14 and enter here. This is the amount of fade margin in the system.

P. Line 17. Enter the Terrain Factor.

> ***a*** (terrain factor)
> = 4 for smooth terrain.
> = 1 for average terrain.
> = 1/4 for mountainous, very rough, or very dry terrain.

Q. Line 18. Enter the Climate Factor.

> ***b*** (climate factor)
> = 1/2 for Gulf coast or similar hot, humid areas.
> = 1/4 for normal interior temperate or northern regions.
> = 1/8 for mountainous or very dry areas.

R. Line 19. Enter the minimum Annual Outage (from Table A-6).

S. Line 20. Enter the Reliability percentage (from Table A-6).

A.2.4 Path Availability and Reliability

For a given path, the system reliability is generally worked out on methods based on the work of Barnett and Vigants. The presentation here has now been superseded by CCIR 338-6 that establishes a slightly different reliability model. The new model is more difficult to use and, for most purposes, yields very similar results. For mathematical convenience, we will use fractional probability (per unit) rather than percentage probability, and will deal with the **unavailability** or outage parameter, designated by the symbol U. The **availability** parameter, for which we use the symbol A, is given by (1-U). **Reliability**, in percent, as commonly used in the microwave community, is given by 100A, or 100(1-U).

Non-Diversity Annual Outages

Let U_{ndp} be the non-diversity annual outage probability for a given path. We start with a term r, defined by Barnett as follows:

r = actual fade probability/Rayleigh fade probability ($=10^{-F/10}$)

Where,

F = fade margin, to the minimum acceptable point, in dB.

For the worst month, the fade probability due to terrain is given by:

$$r_m = a \times 10^{-5} \times (f/4) \times D^3$$

Where,

D = path length in miles.
f = frequency in GHz.
a (terrain factor)
= 4 for smooth terrain.
= 1 for average terrain.
= 1/4 for mountainous, very rough, or very dry terrain.

Over a year, the fade probability due to climate is given by:

$$r_{yr} = b \times r_m$$

Where,

b (climate factor)
= 1/2 for Gulf coast or similar hot, humid areas.
= 1/4 for normal interior temperate or northern regions.
= 1/8 for mountainous or very dry areas.

By combining the three equations and noting that U_{ndp} is equal to the actual fade probability, for a given fade margin F, we can write:

$$U_{ndp} = r_{yr} \times 10^{-F/10} = b \times r_m \times 10^{-F/10}$$

or

$$U_{ndp} = a \times b \times 2.5 \times 10^{-6} \times f \times 10D^3 \times 10^{-F/10}$$

See Table A-6 for the relationship between system reliability and outage time.

Table A-6
Relationship Between System Reliability & Outage Time

RELIABILITY (%)	OUTAGE TIME (%)	OUTAGE TIME PER: YEAR	MONTH (Avg.)	DAY
0	100	8760 Hr	720 hr	24 hr
50	50	4380 Hr	360 hr	12 hr
80	20	1752 hr	144 hr	4.8 hr
90	10	876 hr	72 hr	2.4 hr
95	5	438 hr	36 hr	1.2 hr
98	2	175 hr	14 hr	29 min
99	1	88 hr	7 hr	14.4 min
99.9	0.1	8.8 hr	43 min	1.44 min
99.99	0.01	53 min	4.3 min	8.6 sec
99.999	0.001	5.3 min	26 sec	0.86 sec
99.9999	0.0001	32 Sec	2.6 sec	0.086 sec

A.2.5 Methods Of Improving Reliability

If adequate reliability cannot be achieved by use of a single antenna and frequency, space diversity or frequency diversity (or both) can be used. To achieve space diversity, two antennas are used to receive the signal. For frequency diversity, transmission is done on two different frequencies. For each case the two received signals will not experience fades at the same time. The exact amount of diversity improvement depends on antenna spacing and frequency spacing.

A.2.6 Availability Requirements

Table A-7
Fade Margins Required for 99.99% Reliability, Terrain Factor of 4.0, and Climate Factor of 0.5

DISTANCE	450 MHz BAND	950 MHz BAND
5 Miles (8 km)	7 dB	10 dB
10 Miles (16 km)	17 dB	20 dB
15 Miles (24 km)	22 dB	25 dB
20 Miles (32 km)	27 dB	30 dB
25 Miles (40 km)	29 dB	32 dB
30 Miles (48 km)	32 dB	35 dB

A.2.7 Path Calculation Balance Sheet

Frequency of operation _____GHz Distance _____Miles

SYSTEM GAINS			
1.	Transmitter Power Output	_____	dBm
2.	Transmitter Antenna Gain	+_____	dBi
3.	Receiver Antenna Gain	+_____	dBi
4.	**Total Gain (sum of lines 1, 2, 3)**	_____	**dB**
SYSTEM LOSSES			
5.	Path loss (_____miles)	-_____	dB
6.	Transmission Line Loss TX		
	(Total Ft _____; dB/100 ft)	-_____	dB
7.	Transmission Line Loss RX		
	(Total Ft U _____; dB/100 ft)	-_____	dB
8.	Connector Loss (Total)	-_____	dB
9.	Branching losses	-_____	dB
10.	Obstruction losses	-_____	dB
11.	**Total loss (sum of lines 5 through 10)**	_____	**dB**
SYSTEM CALCULATIONS			
12.	Total Gain (line 4)	+_____	dBm
13.	Total Loss (line 11)	-_____	dB
14.	**Effective Received Signal**		
	(line 12-line 13) (_____uV)	_____	**dBm**
15.	Minimum Signal Required (BER = 1X10E-4)	-_____	dBm
16.	**Fade Margin (line 14-line 15)**	_____	**dB**
17.	Terrain Factor	_____	
18.	Climate Factor	_____	
19.	Annual Outage	_____	min.
20.	Reliability	_____	%

NOTES:

Addendum

Starlink Transfer Panel

Drawing # 602-12409-01 Rev. A

Released April 1999

Section 1: System Characteristics

1.1 Introduction

The TP64 Transfer Panel is designed to provide a redundant hot or cold standby configuration for a full-duplex telecommunications radio link or an half-duplex (STL) link.

1.2 System Features

- Redundant standby system accessory for Starlink 9000 QAM STL product lines.
- Hot or cold standby
- Manual transfer and Master/Slave selection by front panel push button.
- Front panel tri-color LED indicators display status of transmitter and receiver functions of both Main and Standby radios.
- RF transfer relay provides high isolation, low insertion loss, and wide bandwidth, while maintaining RF termination of the Standby radio transmitter.

1.3 System Specifications

Redundant Standby System Frequency Range	0-2 GHz (limited by power divider)
TX Relay Frequency Range	0 to 18 GHz
TX Relay Insertion Loss	0.2 dB max. (0-4 GHz)
TX Relay Isolation	80 dB min. (0-4 GHz)
TX Relay VSWR	1.2:1 max. (0-4 GHz)
TX Relay Switching Type	Make before Break, Transfer Switch (standby TX switched into 50 ohm power termination)
TX Relay Switching Time	15 mSec max
TX Relay Life	1×10^6 cycles
TX Relay & RX Power Divider RF Connector	50 ohms type N (female)

Type	
RX Power Divider Insertion Loss	3.2 dB typ. f= 1GHz
Control I/O Interface	Radio A & Radio B DB-9 male (see Appendix)
Power	10 watts +12 VDC input (supplied by Main and Standby Radios) Optional External Supply 115/230 VAC
Temperature Range	Specification Performance: 0° to 50°C Operational: -20° to 60°C
Dimensions	1 RU: 17.00"w x 18.25"d x 1.718"h (43.18 x 46.36 x 4.36cm)
Shipping Weight	TBD

Section 2: Installation

2.1 Unpacking

The TP64 Transfer Panel should be carefully unpacked and inspected for shipping damage. Should inspection reveal any shipping damage, visible or hidden, immediately file a claim with the carrier. Keep all packing materials until correct performance of the system is confirmed.

We recommend that the top cover of the TP64 be removed for a brief inspection of the internal components. Verify that all modules, assemblies, and cables are mechanically secure. After visually inspecting the internal components, replace the top cover.

A pre-installation bench test is recommended.

2.1.1 STARLINK 9003Q Applications

Normally, the TP64 is shipped with the Main and Standby transmitters per the customer order.

There is no duplexer for an half-duplex (STL) link.

The receiver end of the link does not require a TP64 for a redundant standby configuration.

2.1.2 Main/Standby Retrofit

If the TP64 is to be installed in an existing site to convert a standalone unit to a main/standby, particular attention must be made to set up all of the parameters as discussed in this manual.

STARLINK STL transmitters in a redundant standby retrofit are relatively simple to setup in the field.

In any case, the system installer may call Moseley Technical Services for assistance.

2.2 Rack Installation

The TP64 Transfer Panel is normally mounted between the Main and Standby radios to allow the shortest possible lengths of transmission cable.

The TP64 is designed for mounting in standard rack cabinets. The chassis has mounting holes for Chassis Trak C-300-5-1-14 rack slides. If rack slides are used, be sure to leave at least a 15-inch service loop in all cables to the equipment.

If rack slides are not used, use the rack mounting brackets ("rack ears") and hardware included with the TP64.

2.3 Power Supply

The TP64 main power (+12/+15 VDC) is supplied by the cable from both radios and therefore requires no external power connection. The Main and Standby radio supplies are summed internally in the TP64 so that if power from one radio fails, power to the TP64 will not be interrupted.

Turn on the internal supply of the TP64 by switching the rear panel power switch up. This supplies the internal electronics of the TP64. This switch should be left ON all the time.

Optionally, a wall-mount AC-DC power converter may be used for added back-up. The converter may also be useful for testing and troubleshooting. If you require an AC power converter, contact Moseley. Specify 115 Volt or 230 Volt when ordering. DC-DC converters may also be used, contact Moseley for availability.

2.4 Equipment Interconnection-Starlink 9003Q

2.4.1 Transmitter-TP64

Figure 2-1 shows a typical Starlink QAM (STL) Main/Standby configuration for the transmitter end of the link.

The digital audio (AES/EBU) or analog audio lines may be split to both of the program inputs through the use of wired XLR tees.

The RS-232 data control aux channel can be split to both transmitters through a "modem splitter". The splitter may be a passive device, such as Black Box p/n TLO73A-R2 (3 port,MS-3).

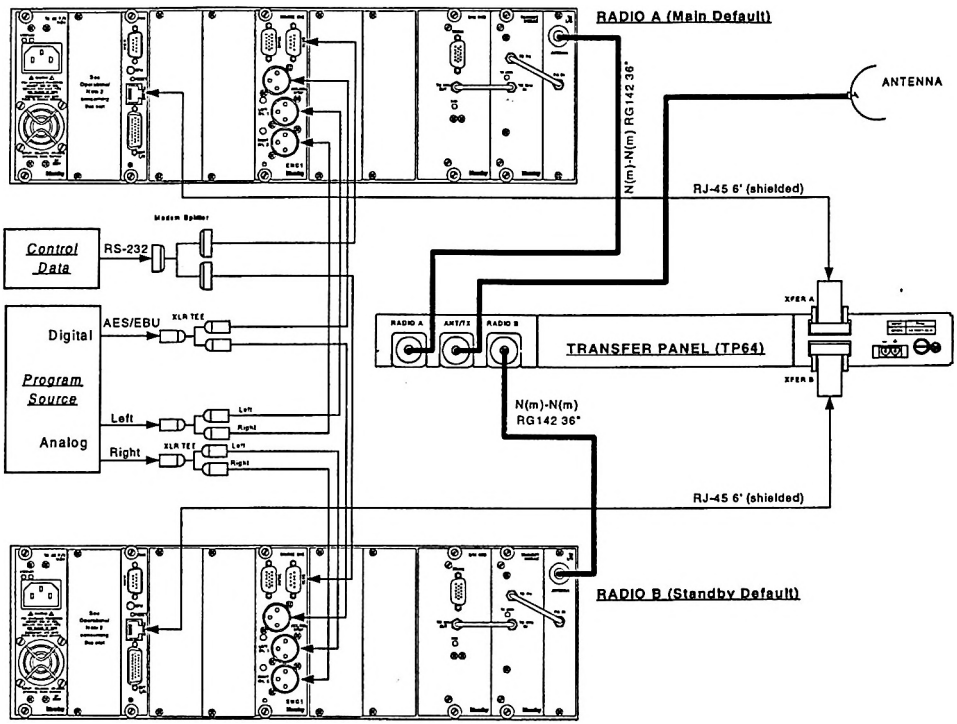

Figure 2-1
Starlink 9003Q TX Main/Standby Connection-TP64

2.4.2 Transmitter-TPT2

In order to use a Starlink QAM Transmitter with a TPT2 transfer panel, a special interface cable is used (see Figure 2-2).

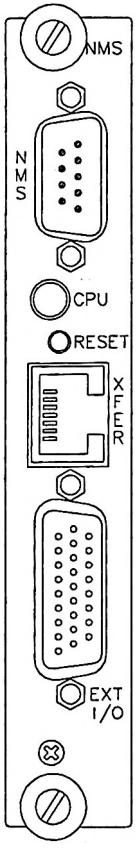

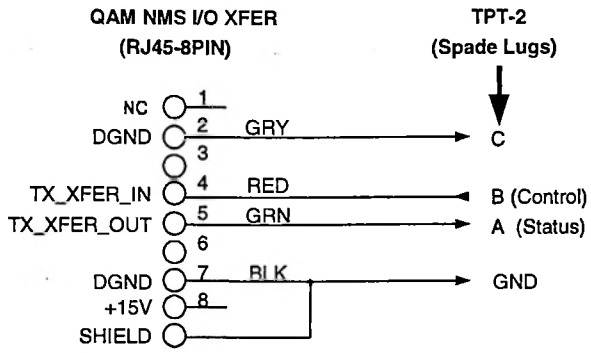

	I/O Levels	Logic
TX_XFER_IN	TTL	LOW=TX RADIATE
TX_XFER_OUT	TTL	HIGH=TX OK

NMS module
26 pin D plug
pin 10 is RSL
pin 20 is ground

Figure 2-2
Starlink 9003Q TX NMS I/O Connection - TPT2

The digital audio (AES/EBU) or analog audio lines may be split to both of the program inputs through the use of wired XLR tees.

The RS-232 data control aux channel can be split to both transmitters through a "modem splitter". The splitter may be a passive device, such as Black Box p/n TLO73A-R2 (3 port,MS-3).

2.4.3 Receiver

Figure 2-5 shows a typical Starlink QAM (STL) Main/Standby configuration for the receiver end of the link. A TP64 is not required, as both of the receivers are "ON" all the time. The antenna input is split to the two receivers with an RF power divider.

2.4.3.1 Audio Switching- Optimod

The Main and Standby audio outputs can be routed to the inputs of an Optimod stereo generator (with the AES/EBU input option). Route the AES/EBU from the Main receiver and the analog from the Standby receiver, and the Optimod will always default to the AES/EBU input if the data is valid (i.e., the receiver audio data is locked).

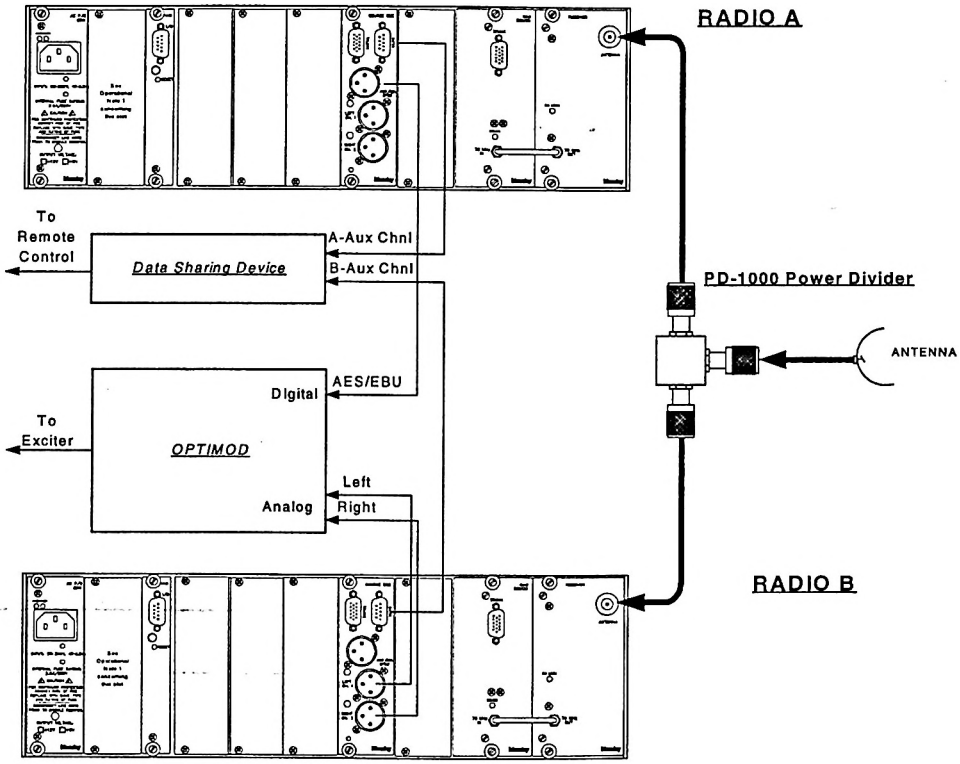

Figure 2-3
Starlink 9003Q RX Main/Standby Connection (w/OPTIMOD)

2.4.3.2 Audio Switching- External

If there is no Optimod, an external audio switching device may be used. The Radio Design Labs ST-LCR1 is shown, which contains 2 DPDT relays and is easily mounted

inside of the rack. For complete digital audio outputs, only one ST-LCR1 is required to switch the balanced AES/EBU lines (see Figure 2-6).

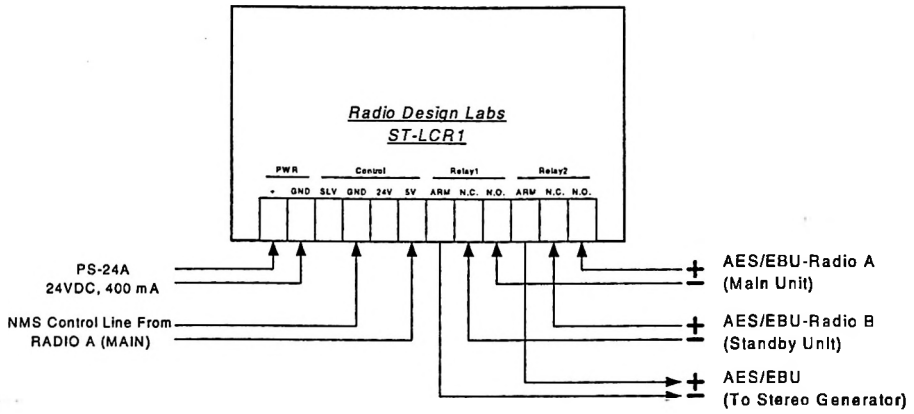

Figure 2-4
Receiver Audio Output Switching-External Control (Digital Audio)

For analog lines, two ST-LCR1's must be used to switch the left and right balanced lines (see Figure 2-4).

2.4.3.3 External Logic and NMS Connection

In either case, the NMS control line from the Main Receiver must provide the switching signal to energize the relays to the NO position. This is the normal operating condition. The NMS control line will be HIGH (+5V), signifying the Main receiver to be good. If the Main receiver fails, the line will go LOW, and the relay will de-energize to the NC position (the Standby receiver will then be active).

The NMS control line cable is available from Moseley for these configurations, although a cable can be made from a shielded RJ-45 (Black Box p/n EVNSL60-0006) This is a 6 foot cable that can be cut, and the ends tinned to provide the RX XFER OUT signal (RJ45 pin 6) for the indicated connection. Be sure to maintain the shield performance by connecting to ground. The high RF levels in typical STL receiver environments can cause problems. See Figure 2-5 below.

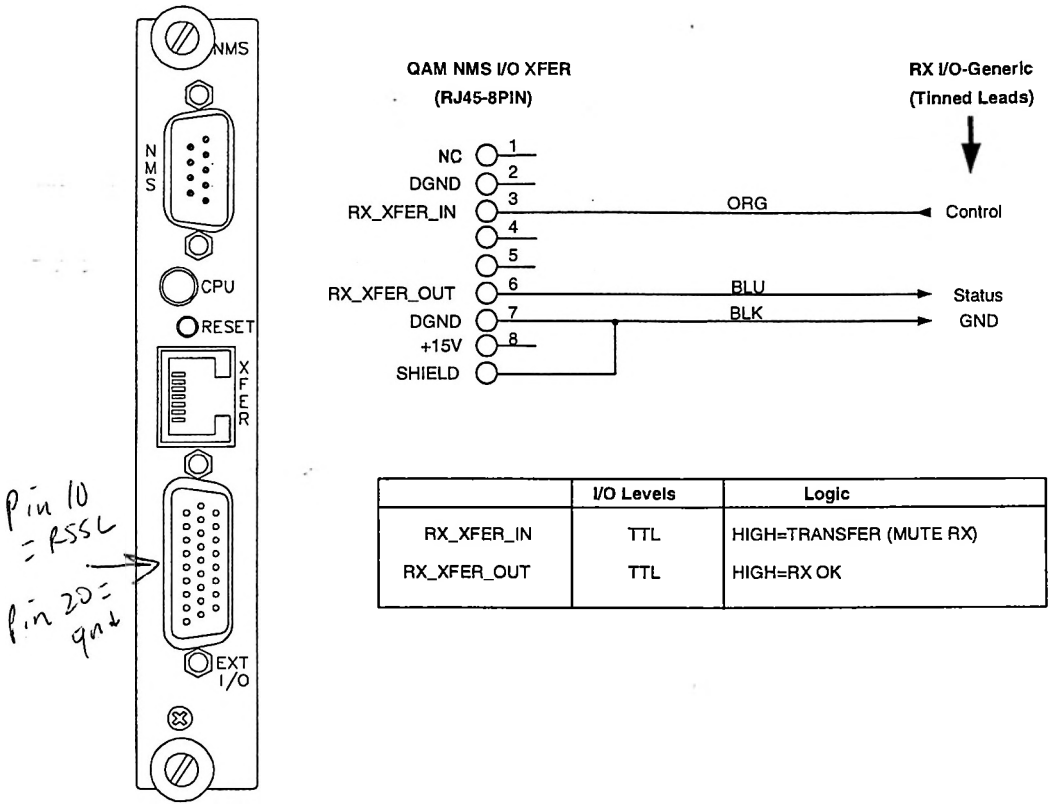

	I/O Levels	Logic
RX_XFER_IN	TTL	HIGH=TRANSFER (MUTE RX)
RX_XFER_OUT	TTL	HIGH=RX OK

Figure 2-5
Receiver Audio Output Switching-External Control (Digital Audio)

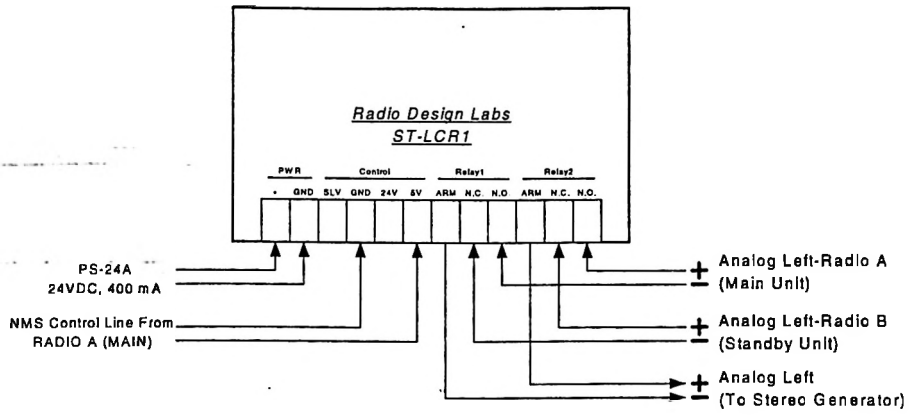

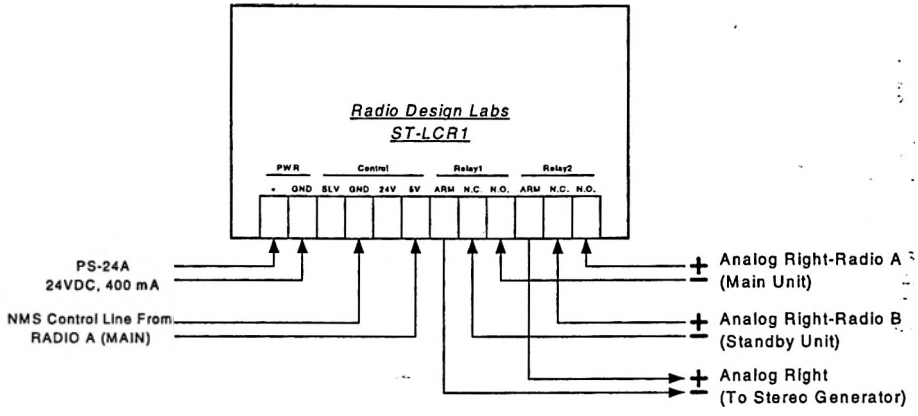

Figure 2-6
Receiver Audio Output Switching-External Control (Analog Audio)

2.4.4 Starlink 9003Q with PCL6000/606 Backup

System Considerations

Incompatible Modulation Formats

The main problem with using a PCL6000 or 606 as a backup for the Starlink QAM system is the incompatible modulation formats. The transmitters can switch to a back-up under a failure mode. But if a receiver fails (at the receiver end), the back-up receiver will not be able to take over until the transmitters are forced to switch to the compatible unit.

This transmitter switchover can be accomplished through the use of a return telemetry signal via remote control, that detects the failed receiver and sends back a control line to transfer at the studio site.

Composite vs. Discrete Audio

The other problem is most typical PCL6000/606 links are set for composite FM transmission. The Starlink QAM does not support this type of baseband modulation.

Therefore, the PCL6000/606 composite STL must be converted to a discrete digital system through the use of a DSP6000. This will provide the discrete audio (left/right or digital AES) necessary for switchover.

Transmitter

Figure 2-4 shows a typical Starlink QAM (STL) Main/Standby configuration using a PCL 6000/DSP6000 transmitter/encoder as a backup.

To connect the PCL6000/606 to the TP64 control input, a PCL-TP64

Using an Existing TPT Transfer Panel

An existing Moseley TPT transfer panel may be used for the transmitter transfer function. A STARQ-TPT cable is used, see Figure 2-2 for schematic details.

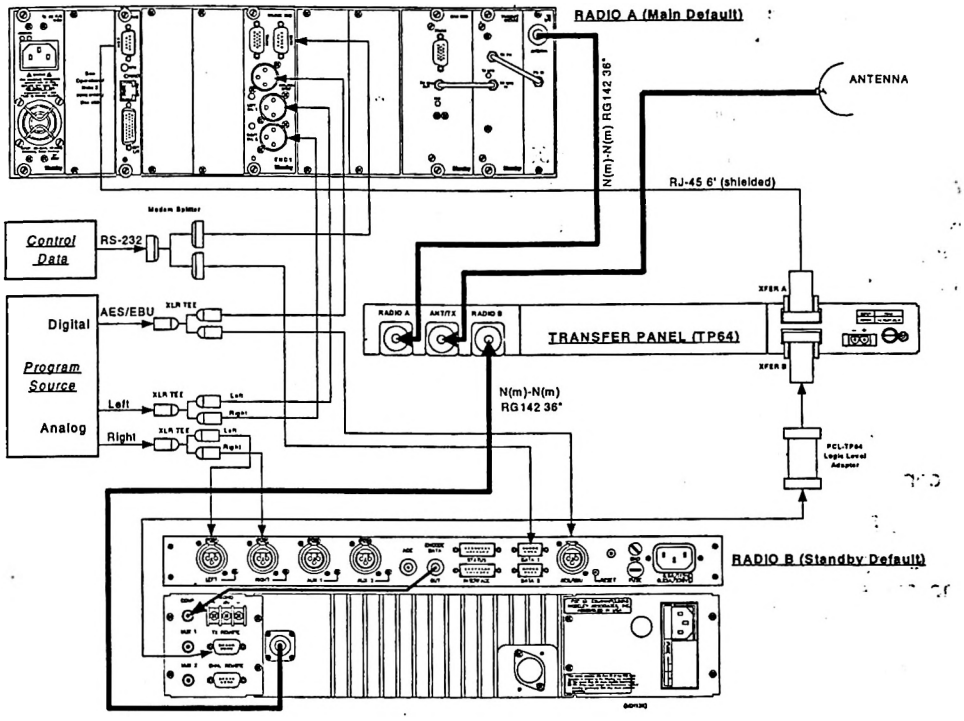

Figure 2-7
Starlink QAM TX and PCL6000/DSP6000 TX Backup

Receiver

Figure 2-8 shows a typical Starlink QAM (STL) Main/Standby configuration using a PCL 6000/DSP6000 receiver/decoder as a backup.

If the system does not have a Digital OPTIMOD (or equivalent) for the AES to analog audio switchover function, the external audio switching method may be used.

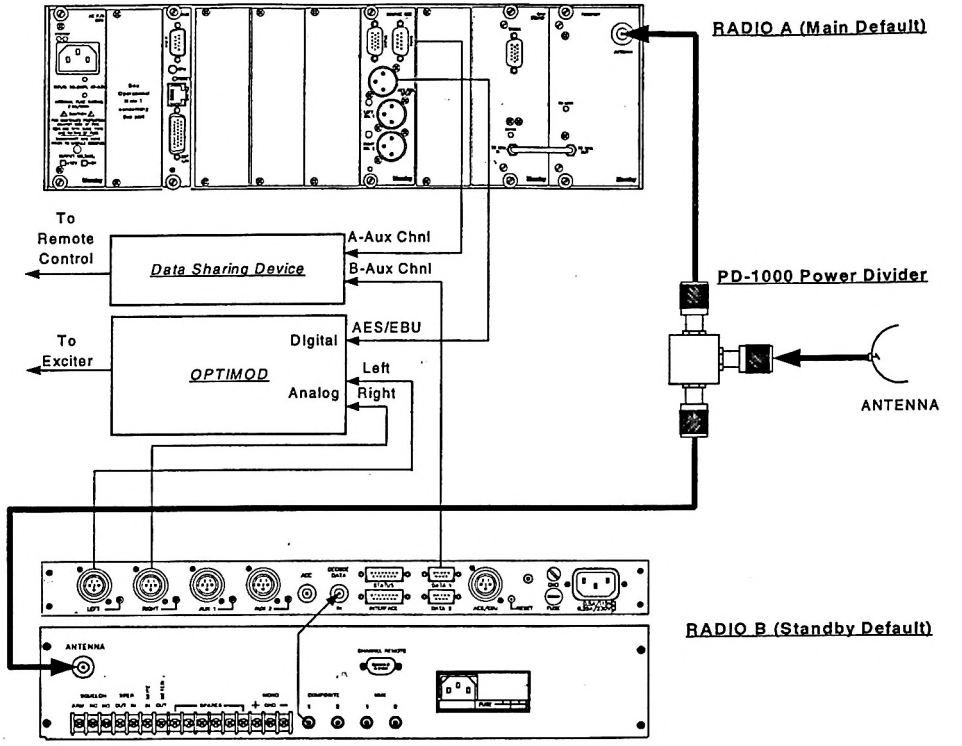

Figure 2-8
Starlink QAM RX and PCL6000/DSP6000 RX Backup (w/OPTIMOD)

Section 3: Operation

3.1 Hot/Cold Standby Modes

Hot Standby *(*preferred)*

Hot standby leaves both transmitters in the RADIATE ON condition, and the TP64 controls the RF relay to select the active transmitter, thereby decreasing switchover time. This is the preferred operating mode.

Cold Standby

Cold standby can be used in situations where low power consumption is a priority. In this mode, the TP64 will control the RADIATE function of each transmitter, turning the RF output ON (in tandem with the RF relay) as required for switching. This will increase switching time and a corresponding increase in data loss during the switchover.

3.2 TP64 Front Panel Controls and Indicators

Note: See Section 3.3 (following) for a detailed description of the Master/Slave logic implemented in the TP64.

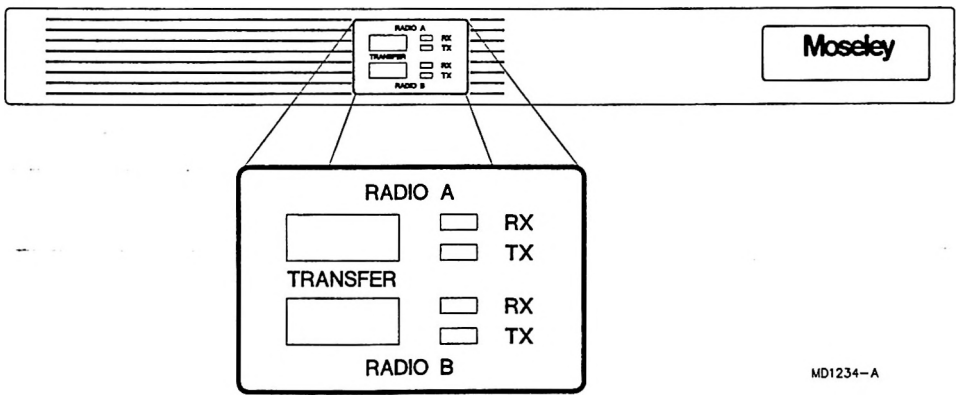

Figure 3-1
TP64 Front Panel

LED Indicators

Green: The indicated module is active, and that the module is performing within its specified limits.

Yellow: The indicated module is in standby mode, ready and able for back-up transfer.

Red: There is a fault with the corresponding module. It is not ready for backup, and the TP64 will not transfer to that module.

TRANSFER Switches

The RADIO A and RADIO B transfer switches cause the selected radio to become *active*, and the *Master*. See Section 3.4 (following) for further details.

3.3 Master/Slave Operation & LED Status

The TP64 operates in a Master/Slave logic mode. In the power up condition, the Master is RADIO A. This means that RADIO A is the default active unit. The following logic applies to hot or cold standby.

Table 3-1
TP64 Transmitter Master/Slave Logic

	Selected Master	TXA Status	TXB Status	TXA LED	TXB LED	Active TX	TX Relay Position
A-Master Logic	A	OK	OK	GRN	YEL	A	A
	A	OK	FAIL	GRN	RED	A	A
	A	FAIL	OK	RED	GRN	B	B
	A	FAIL	FAIL	RED	RED	N/A	A
B-Master Logic	B	OK	OK	YEL	GRN	B	B
	B	OK	FAIL	GRN	RED	A	A
	B	FAIL	OK	RED	GRN	B	B
	B	FAIL	FAIL	RED	RED	N/A	B

Table 3-2
TP64 Receiver Master/Slave Logic

	Selected Master	RXA Status	RXB Status	RXA LED	RXB LED	Active RX	RX Data & Clk
A-Master Logic	A	OK	OK	GRN	YEL	A	A
	A	OK	FAIL	GRN	RED	A	A
	A	FAIL	OK	RED	GRN	B	B
	A	FAIL	FAIL	RED	RED	N/A	None
B-Master Logic	B	OK	OK	YEL	GRN	B	B
	B	OK	FAIL	GRN	RED	A	A
	B	FAIL	OK	RED	GRN	B	B
	B	FAIL	FAIL	RED	RED	N/A	None

A-Master Logic (default power-up):

If RADIO A is "good", the TP64 will remain in RADIO A position, regardless of RADIO B's status.

If RADIO A fails, the TP64 will switch to RADIO B (assuming that RADIO B is "good")

If RADIO A then returns to a "good" condition, the TP64 will switch back to RADIO A (the default Master)

Manual Switchover to B-Master Logic

The front panel switch on the TP64 can be used to manually force the system to a new Master.

By pressing the RADIO B button, RADIO B now becomes the Master, and the TP64 will switchover to RADIO B (assuming that RADIO B is "good").

The default A-Master Logic will then switch to B-Master Logic, as outlined in the tables.

> *Note: Manual switching of the Master is often used to force the system over to the standby unit. The user may want to put more "time" on the standby unit after an extended period of service.*
> *In Hot Standby configurations, this will not buy the user anything in terms of reliability. In a Cold Standby, the "burn time" is more significant, since the RF power amplifier device operating life becomes a factor.*

3.4 Starlink 9003Q Transmitter Settings

These settings configure the transmitter for hot (or cold) standby.

It is important that each SL9003Q transmitter in the redundant pair is configured identically for proper operation.

Controls #1

TX CONTROL:

XFER:	Configures the unit for HOT or COLD STANDBY operation, depending on the setting of TX XFER (next line in menu).

TX XFER: **(select per system requirement)**

HOT:	Configures the unit for HOT STANDBY operation.* *(preferred)*
COLD:	Configures the unit for COLD STANDBY operation.

TX STATUS: **(shown in this menu for ease of use)**

RADIATE:	Indicates the transmitter is ON and radiating
OFF:	Indicates the transmitter is OFF

3.5 TP64 Settings

The TP64 software settings are contained in the internal firmware. Aside from the front panel RADIO A/B Master Select (as described above), there are no user-configurable settings in the TP64 unit.

Appendix

A.1 Cable Drawings

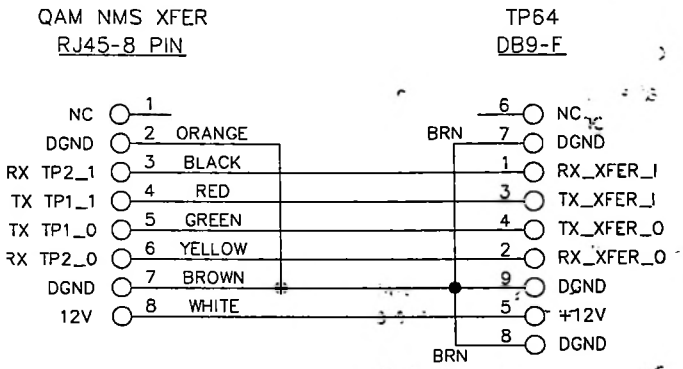

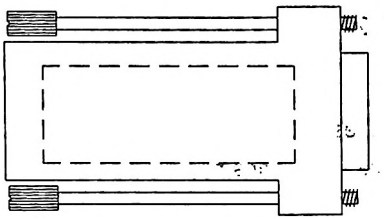

STARLINK – TP64 Control Cable Adaptor
230-12127-01