Operating Manual

OPTIMOD®-FM Six-Band Limiter Accessory Chassis

MODEL 8100A/XT2

to accompany OPTIMOD-FM Model 8100A/1

PRELIMINARY

orban

Orban Associates Inc., 645 Bryant St., San Francisco, CA 94107
Toll Free: (800) 227-4498, In California, (415) 957-1067 Telex. 17-1480

95957-000-01 8/86

Section 2
Installation

In this section:

CAUTION

The installation and servicing instructions in this manual are for use by qualified personnel only. To avoid electric shock do not perform any servicing other than that contained in the Operating Instructions unless you are qualified to do so. Refer all servicing to qualified service personnel. (per UL 813)

1. WHAT TO DO

READ THIS FIRST!

If you are installing an **8100A/ST Studio Chassis**, read XT2 WITH THE STUDIO CHASSIS ACCESSORY at the end of this section *before* installing either unit.

The XT2 itself merely needs to be mounted in a rack and connected to the host OPTIMOD-FM Audio Processor. However, certain jumpers on the host OPTIMOD-FM's circuit boards must be repositioned to configure the unit for operation with the XT2. In addition, older OPTIMOD-FM Audio Processors may require simple reworking of some of their circuit boards and/or installation of an accessory port.

If your OPTIMOD-FM is **Model 8100A/1 with a serial number of 699000 or above**, you need only follow the INSTALLATION INSTRUCTIONS.

> The model and serial number of your OPTIMOD-FM Audio Processor are shown on a rear-panel label.

If your OPTIMOD-FM is **Model 8100A/1 with a serial number below 699000**, you must first perform steps 1 and 2 of the RETROFIT INSTRUCTIONS.

If your OPTIMOD-FM is **Model 8100A (serial number below 638000)**, you must follow all of the RETROFIT INSTRUCTIONS before installing the XT2.

In this manual, "XT2" is used to refer the Model 8100A/XT2 Six-Band Limiter. "OPTIMOD-FM" and "8100A" are used interchangeably to refer to the Models 8100A or 8100A/1 OPTIMOD-FM® Audio Processor (except where context clearly indicates a specific reference to one of the two models). Together, the OPTIMOD-FM and XT2 form the "8100A + XT2 System".

2. INSTALLATION INSTRUCTIONS

Read "WHAT TO DO" on the preceding page before continuing.

Allow about an hour for installation.
(Installation must be done with the OPTIMOD-FM off-the-air.)

The XT2 should not be installed until the OPTIMOD-FM Audio Processor has been installed and thoroughly tested on the air.

1) **Unpack and inspect.**

If you ever re-ship the XT2 (e.g., for servicing), it is best to ship it in the original packing materials since these have been carefully designed to protect the unit. Make a mental note of the method of packing and *save all packing materials.*

Packed with the 8100A/XT2 are:

1) Two 1.8-ohm resistors (for step 2 of RETROFIT INSTRUCTIONS)
2) Four 10-32 x 3/4" screws (for rack mounting)
3) Final Factory Qualification Test Results for this unit
4) This Operating Manual

Perform a general inspection of the contents of the package to check for obvious damage. DAMAGE CLAIMS must be made by *you* against the carrier *immediately upon discovery.* Save packing and other evidence of damage for the carrier's inspector.

2) **Reposition jumpers on OPTIMOD-FM Cards #5, #6, #7, and #8.**

IMPORTANT: Before continuing, you *must follow the RETROFIT INSTRUCTIONS* in this section if the serial number of your OPTIMOD-FM is below 699000 (see WHAT TO DO on the preceding page). When the retrofit is complete, return to this step.

a) Open the OPTIMOD-FM's front panel, remove subpanel.

Jumpers may be reset from the front of the chassis while the unit is in the rack, once the front panel has been opened and the subpanel removed.

Remove the three hex-socket screws at the top of the front panel with a 5/64" hex wrench (provided with unit). Tilt the hinged front panel downward to reveal the interior. Set the AC POWER switch to OFF. Loosen the four DZUS fasteners on the subpanel by turning each one-quarter turn counterclockwise with a long 3/16" or 1/4" flat-blade screwdriver. Taking care not to stress the flat cables beneath it, tilt the top of the subpanel outward and to the left to clear the upper chassis lip and the door support rail at the right.

CAUTION

To avoid trauma to circuit card components, be sure the OPTIMOD-FM's AC POWER switch (located behind the front panel) is set to OFF before removing or inserting any of the printed circuit cards.

b) Remove Card #5. Move each of jumpers A, B, and C to the "6–BAND LIMITER ACCESSORY CHASSIS" position (see Fig. 2-1). Reinstall Card #5.

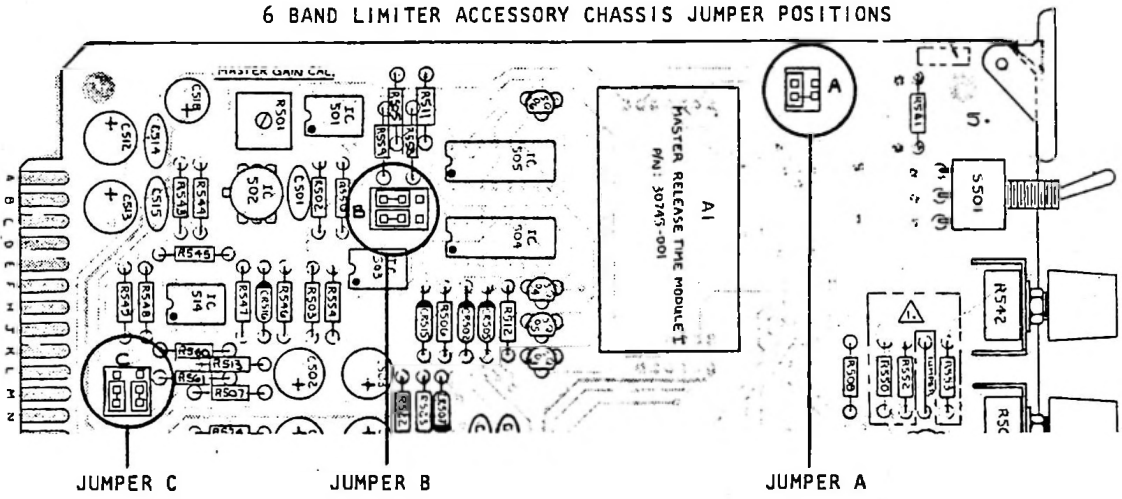

Fig. 2-1: Jumper Positions, OPTIMOD-FM Card #5

(For Card #5, part number 30741-000-03 only.)

c) Remove Card #6. Move the two links at jumper C to jumper B (see Fig. 2-2). DO NOT MOVE jumper A. Reinstall Card #6.

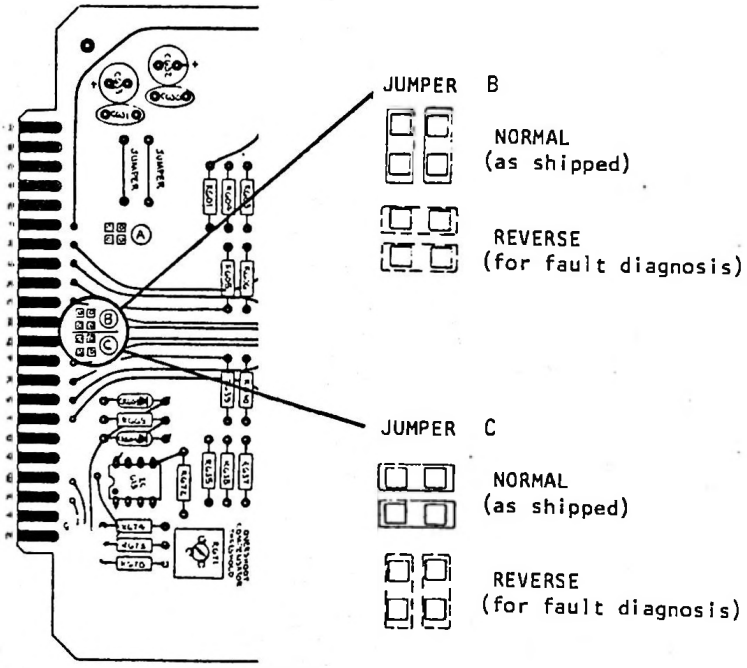

Fig. 2-2: Jumper Positions, OPTIMOD-FM Card #6

(For Card #6, part numbers 30461-000-03 and above only – if your cards look different, see Appendix J of your OPTIMOD-FM Operating Manual for jumper locations.)

d) Remove Cards #8 and #9. On each of Cards #8 and #9, move the link at jumper B to the "ACCESSORY CHASSIS" position (see Fig. 2-3). DO NOT MOVE jumper A on either card. Reinstall the cards.

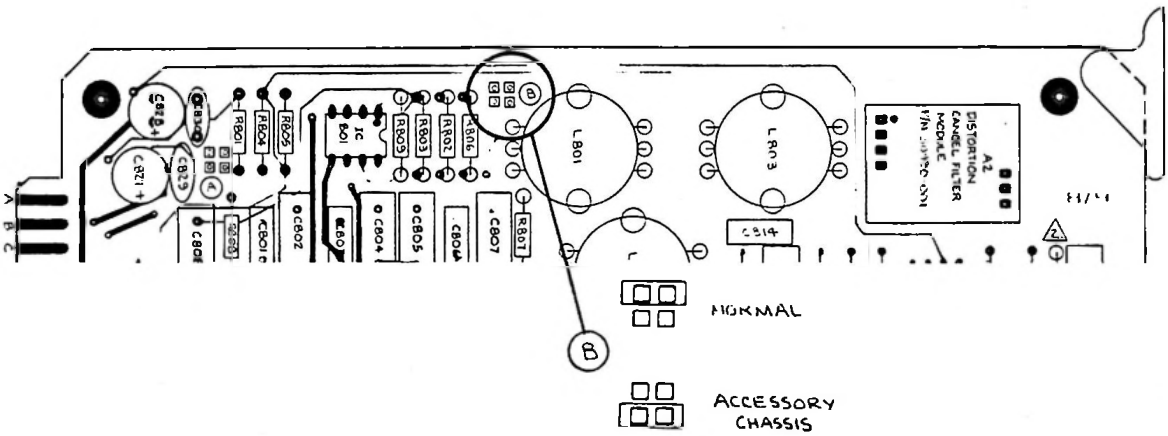

Fig. 2-3: Jumper Positions, OPTIMOD-FM Cards #8 and #9

(For Cards #8/#9, part numbers 30481-000-04 or above only – if your cards look different, see Appendix J of your OPTIMOD-FM Operating Manual for jumper locations.)

e) Reinstall the OPTIMOD-FM's subpanel and close the front panel.

Taking care not to stress the flat cables beneath it, tilt the top of the subpanel inward and to the left to clear the upper chassis lip and the door support rail at the right. The DZUS fasteners turn only 1/4-turn. Don't force them, lest they be damaged in a way that is very time consuming to repair. **The subpanel should always be replaced since it is an integral part of the chassis RFI protection.**

Set the internal AC POWER switch to ON. Raise the front panel and fasten the three screws that secure it in place.

If the unit was removed from the rack, remount it. Ground the unit and connect AC power.

3) **Mount and connect XT2.**

a) Mount the XT2 in a rack immediately *below* the OPTIMOD-FM.

The XT2's connecting cable will not reach the connector on the OPTIMOD-FM unless the XT2 is mounted directly below the OPTIMOD-FM.

b) Plug the flat cable from the XT2 into the OPTIMOD-FM's ACCESSORY PORT #2 and attach the connector with the retaining screws.

Both power and signals for the XT2 are supplied through this cable.

4) **Complete the Registration Card and return it to Orban.**

5) **Set 8100A + XT2 System controls.**

The OPTIMOD-FM and XT2 work together in a system. The controls on one unit affect the performance of the other. See Section 3 for recommended control settings and for information on customizing your audio processing.

If you are using an 8100A/ST Studio Chassis, set *its* controls to the settings recommended for the 8100A in Section 3.

3. RETROFIT INSTRUCTIONS

IMPORTANT: Skip these instructions if the serial number of your OPTIMOD-FM is 699000 or above.

If your OPTIMOD-FM is Model 8100A/1 with a serial number below 699000 but not below 638000, follow steps 1 and 2 only.

If your OPTIMOD-FM is Model 8100A (serial number below 638000), follow steps 1 through 6.

Materials: Retrofit Kit RET-27 (available from the factory) contains the parts needed in steps 3 through 6. The resistors specified in step 2 are supplied with the XT2.

These retrofit modifications are simple and require only common circuit board repair skills, appropriate tools, and a careful, systematic approach. However, to save time and avert errors, we suggest that you read through each step in these instructions with board in hand before beginning work.

The drawings in Appendix J of your OPTIMOD-FM Operating Manual show component locations. (If you have the older 8100A unit, see Section 6 of the this manual for Card #5 drawings.) Advice for reworking printed-circuit cards is given in Appendix F of the OPTIMOD-FM manual.

1) **Open the OPTIMOD-FM's front panel, remove subpanel.**

Remove the three hex-socket screws at the top of the front panel with a 5/64" hex wrench (provided with unit). Tilt the hinged front panel downward to reveal the interior. Set the AC POWER switch to OFF. Loosen the four DZUS fasteners on the subpanel by turning each one-quarter turn counterclockwise with a long 3/16" or 1/4" flat-blade screwdriver. Taking care not to stress the flat cables beneath it, tilt the top of the subpanel outward and to the left to clear the upper chassis lip and the door support rail at the right.

2) **Check, add resistors on OPTIMOD-FM Card #PS.**

Allow about 45 minutes for this step.

a) Check the values of resistors R103 and R104 on the OPTIMOD-FM Card #PS, the power supply regulator card. (Card #PS is mounted on the inside of the rear panel. These large resistors are visible with a flashlight in the rear interior of the unit to the left of Card #3, once the front panel has been opened and the subpanel removed.) If the values of R103 and R104 are already 0.62 ohms (blue-red-gold-gold), or if "piggyback" resistors of 1.8 ohms (brown-gray-silver) have been added in parallel to existing 0.91-ohm resistors, skip to step d).

b) Remove the OPTIMOD-FM from the rack, place it on a bench, and carefully open the rear panel.

Set the unit on a pad with the rear panel facing you and about 6" (15cm) back from the edge of the bench. Make certain the power cord is unplugged. Remove screws which attach the top and bottom covers to the rear panel (eight screws on each cover). There is no need to remove the other cover screws. Remove the nine screws circled in black on the rear panel. Very carefully and slowly pull the rear panel out about 3/4" (2cm), then tilt the top edge down until the rear panel is horizontal.

CAUTION

Watch for snags in the internal wiring and for any stress on the ceramic capacitors on the divider wall or input filter box. These capacitors are very fragile and difficult to replace.

c) Connect a 1.8-ohm resistor in parallel with R103. Connect another 1.8-ohm resistor in parallel with R104.

Two 1.8-ohm (brown-gray-silver-silver or brown-gray-silver-gold), 1-watt wire-wound resistors are supplied with the XT2. Bend each lead at right angles (about 1/8" from the resistor bodies), then "piggyback" the new resistors onto the old on the component side of the board. To avoid heat damage, solder the leads together as far away from the resistor bodies as practical. We suggest you mark these changes on the power supply schematic. The net value of each resistor is now approximately 0.62 ohms.

d) If your OPTIMOD-FM is a **Model 8100A** (with a serial number below 638000), skip to step 3).

If you have a **Model 8100A/1** (serial number 638000 or above), close the rear panel (but not the front panel), remount the unit in the rack, skip the rest of the RETROFIT INSTRUCTIONS, and follow the INSTALLATION INSTRUCTIONS on page 2-3.

When replacing the rear panel, make sure that no wires are pinched under the flanges.

3) **Install accessory port in OPTIMOD-FM (Model 8100A, S/N below 638000, *only*).**

Allow about one hour for this step.

a) **If a connector is installed in Accessory Port #1**, remove the metal plate covering Accessory Port #2 and discard the plate and its fasteners.

If no connector is installed, remove the metal plate covering both Accessory Ports. Save the fasteners, and discard the plate. Install the metal plate from the Retrofit Kit over Accessory Port #1, using the fasteners from the discarded plate.

b) Install the connector in the rear-panel hole marked "ACCESSORY PORT 2" with the hardware provided (see Fig. 2-4). Note the orientation of the connector. Dress the wires as shown, adjusting the cable ties as needed. Connect each wire to the mother board as indicated in the table in Fig. 2-4.

Use only moderate tightening force on the small screws. A #6 (3/16") hex nutdriver is the proper tool, but a 5mm nutdriver will also work.

The wire lengths have been chosen to provide enough slack to enable other service operations on the rear panel to be performed. It would be unwise to shorten the wires. The routing shown should be followed to avoid possible crosstalk.

It is safe to tack-solder to the motherboard with the circuit cards in place except in very high RF fields, in which case all cards should be removed. In any case, we recommend using a soldering iron with a grounded tip to minimize possibility of circuit damage. Avoid using excessive amounts of heat or flux at the motherboard, since the connectors could be damaged by tempering of the contacts through excessive heat or by creeping flux.

Because some of the motherboard traces are close together, inspect your work very carefully to be sure that you have not created solder bridges between traces or pads.

c) Re-attach the rear panel by reversing the disassembly procedure.

When replacing the rear panel, make sure that no wires are pinched under the flanges.

4) **Check, replace OPTIMOD-FM Card #5.**

Allow about 5 minutes for this step.

In this and the following two steps, you will be instructed to set cards aside rather than reinstalling them. This is to save you from removing them again to set jumpers as directed in the INSTALLATION INSTRUCTIONS.

CAUTION

Be sure the OPTIMOD-FM's internal AC POWER switch is set to OFF before removing or inserting any of the printed circuit cards.

Table 2-1: Wire List For Connector "AP"

WIRE SCHEDULE					
FROM	TO	FUNCTION	COLOR	LENGTH	WIRE
AP-1	AP-14	15V PROOF	—	.25 IN	BUSWIRE
AP-2	AP-15	+15V	—	.25 IN	"
AP-3	AP-16	-15V	—	.25 IN	"
AP-4	AP-17	CHASSIS GND	—	.25 IN	"
AP-5	AP-18	DIRTY GND	—	.25 IN	"
AP-6	AP-19	CLEAN GND	—	.25 IN	"
AP-12	J9-M	R15 KHz FILTER	BLK	14.5 IN	INSULATED
AP-13	J9-P	R2.2 KHz FILTER	WHT	14.5 IN	"
AP-14	J8-F	15V PROOF	VIO	15.5 IN	"
AP-15	PS-6	+15V	BLU	9 IN	"
AP-16	PS-8	-15V	GRY	7.5 IN	"
AP-17	GND LUG	CHASSIS GND	BLK	2.5 IN	"
AP-18	PS-7	DIRTY GND	BLK	7.5 IN	"
AP-19	PS-7	CLEAN GND	BRN	7.5 IN	"
AP-20	J6-J	L LIMITER OUT	WHT	12.5 IN	"
AP-21	J6-S	R LIMITER OUT	GRY	12 IN	"
AP-22	J8-M	L15KHz FILTER	RED	14 IN	"
AP-23	J8-P	L2.2 KHz FILTER	ORN	14 IN	"

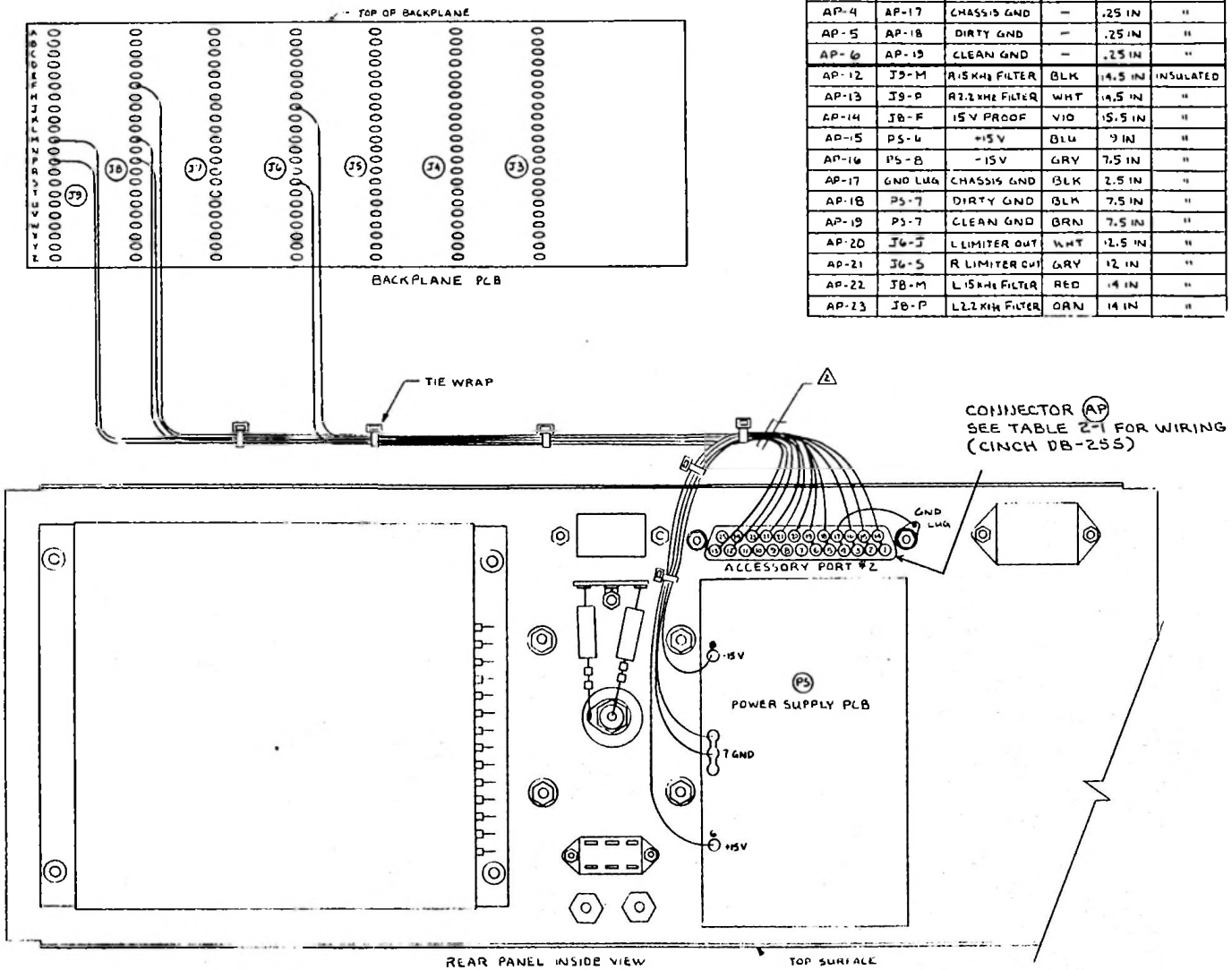

Fig. 2-4: Accessory Port #2 Installation

a) Remove Card #5 and check the part number etched on the solder side.

If the part number is 30741-000-03, the card you have is the correct one for use with the XT2. Set the card aside (do not reinstall it yet) and skip to step 5. You may return the Card #5 included with the Retrofit Kit to the factory for credit.

To do this, contact Orban Customer Service at one of the numbers at the front of this manual to get a Return Authorization number. We will need to know the serial number of your OPTIMOD-FM and the six-digit serial number stamped on the card itself. Only the Card #5 included with the Retrofit Kit (not the one that was already in your unit) will be accepted for credit. The duplicate Card #5 must be returned to us within 60 days of the date of its shipment to you.

Upon receipt of your duplicate #5 Card, we will mail a refund to the organization represented as the owner on the Registration Card. If the Registration card is not on file, other proof of ownership will be required.

If the part number is 30451-000-nn (where -nn is any number) or 30741-000-02 or -01, use #5 Card provided in the Retrofit Kit (which will have an etched number of 30741-000-03 or higher) instead of the old card. Do not install the new card yet – set it aside, taking care not to confuse it with the old card.

The old card is not returnable, but can serve as an emergency spare (although you may hear more processing artifacts with it).

5) **Check, rework the OPTIMOD-FM Card #6.**

Allow about one hour for this step.

The rework in this step enables the XT2 to defeat the OPTIMOD-FM's high-frequency limiters and soft clippers, and it redirects the output of Card #6 to the accessory port installed in step 3).

a) Remove Card #6 check the part number etched on the solder side.

If the part number is 30461-000-05 or above, the card you have is the correct one for use with the XT2. Set it aside and skip to step 6).

If the part number is 30461-000-04 or below, continue to b).

b) Remove all the solder from both sides of the foil pad connected to the center terminal of toggle switch S602 with a vacuum desoldering tool. Use fairly strong diagonal cutters to gently clip the center leg of S602, leaving a stub on the switch long enough to later solder two wires (1/8" will do). Remove and discard the portion of the leg formerly soldered to the card. Gentle wiggling with chain-nose pliers may help release it.

c) Solder the banded (cathode) end of a glass 1N4148 diode to the pad where the center leg of S602 was attached.

d) Desolder the non-banded (anode) end of glass diode CR603 with a vacuum desoldering tool. Bend the diode upward so that the free end is pointing toward S602. Using the long wire from the kit, connect the free end of CR603 to the center terminal of S602. Also connect the free end of the 1N4148 diode installed in c) to this terminal.

Carefully solder both diodes to the terminal. Avoid excess heating and excess solder or flux (which could creep into the switch).

e) Locate and mark pins J and S on the edge connector. On the *component side* of the card, cut both of these traces as close as convenient to the pads near the card edge with a sharp razor knife. Remove about 1/8" of each trace to avoid possible shorts.

Note that not all letters are used, and that pin J is therefore the 8th pin from the top and that pin S is the 15th from the top.

f) Working on the solder side of the card, solder the two short jumpers supplied in the Retrofit Kit to the pads indicated in Fig. 2-5.

Because these pads are so small, there is a risk of shorts. After soldering, it would be wise to remove all flux with a cotton swab moistened with flux remover (Energine® Fireproof Spot Remover works well) and to examine the area for solder slivers.

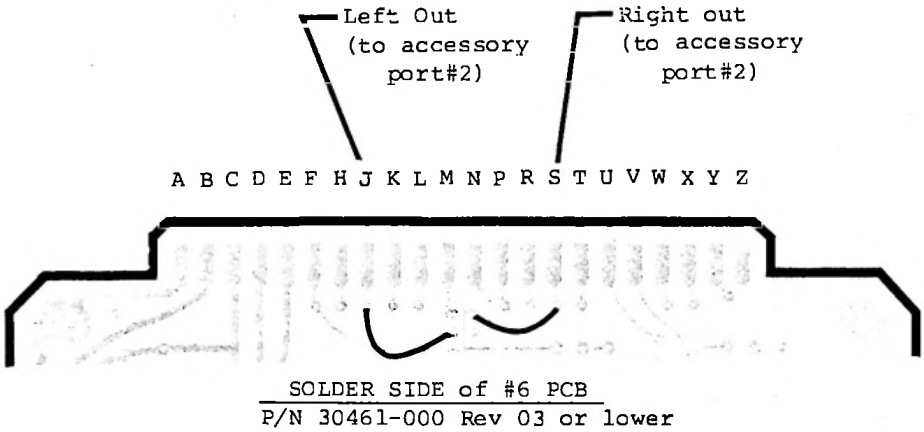

Fig. 2-5: Card #6 Rework

g) Reset the two jumper links (located on the component side of the board, opposite the switch) so that they each contact only one pin.

This "storage" position retains the links so that they can be used to restore the card to its normal configuration should this be necessary in the future.

h) Carefully recheck *all* work done in step 5), then set the card aside.

6) **Check, rework OPTIMOD-FM Cards #8 and #9.**

Allow about 30 minutes for this step.

The rework in this step disconnects the input of each distortion-cancelling low-pass filter from other circuitry. These inputs will now be driven from the XT2.

a) Remove Cards #8 and #9 and check the part number etched on their solder sides (both cards should have the same part number).

If the part number is 30481-000-04 or above, the cards you have are the correct ones for use with the XT2. Set the cards aside and skip to d).

If the part number is 30481-000-03 or below, continue to b). Rework *both* cards.

b) Using a vacuum desoldering tool, desolder and lift those leads of R804 and R805 which are closest to the card's upper edge. Do not desolder the opposite ends. After the leads have been freed by bending the resistors upward, clear the holes of solder for possible future use.

The two resistors should be positioned so that the free leads cannot accidentally come in contact with other circuits or with each other. A small piece of tape over the holes may be helpful.

c) Carefully recheck *all* work done in step 6), then set the cards aside.

d) Follow the INSTALLATION INSTRUCTIONS on page 2-3.

4. XT2 WITH THE STUDIO CHASSIS ACCESSORY

If you are using the 8100A/ST Studio Chassis, we recommend that the Studio Chassis and the OPTIMOD-FM levels be matched to each other before the OPTIMOD-FM is configured for use with the XT2. See the 8100A/ST Operating Manual for complete instructions.

Leave the covers off the Studio Chassis following level-matching to facilitate replacing Card #5. If you have an "old" Card #5 (part number 30741-000-01 or -02 or any part number beginning 30451), use it during the alignment between the Studio Chassis and the OPTIMOD-FM. If you only have a "new" Card #5 (part number 30741-000-03), set its jumpers as shown in Fig. 2-6 and use it during the alignment.

Please note that accurate level alignment between the OPTIMOD-FM and the Studio Chassis is much less critical when the XT2 is in use, because a stage of gain reduction has been placed between the input of the OPTIMOD-FM and its clippers to protect the clippers from being overdriven in the event of gain errors. But if the above suggestions are followed, the STL will be correctly aligned for the OPTIMOD-FM with Studio Chassis even if the XT2 is removed from the system.

Note also that when Card #5 is strapped for XT2 operation, it no longer produces a "standard level" of +3.6dBm at the Studio Chassis output, nor does it cause the OPTIMOD-FM's VU meter to read "0VU" in the L or R COMPRessor OUT positions. Instead, its output is reduced approximately 5dB, causing the "standard level" test to produce -1.4dBm and the VU meter to read "-5VU". This is because Card #5's limiting threshold is reduced to compensate for the increased attack time (which increases overshoots on program material) and so maintain approximately the same program peak levels and STL peak modulation.

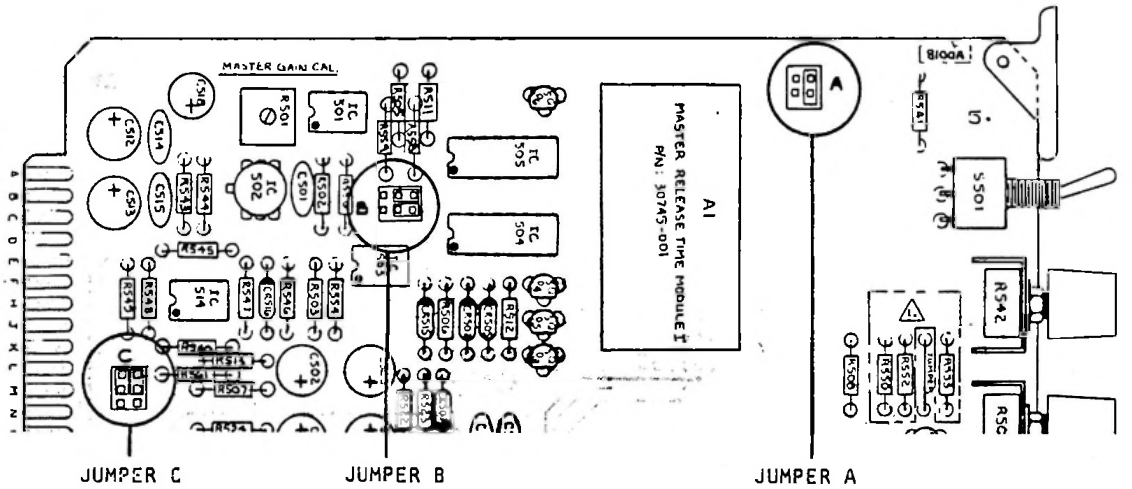

Fig. 2-6: Jumper Positions for Studio Chassis Alignment, Card #5

(Part number 30741-000-03 or above.)

Section 3
Operating Instructions

In this section:

H-F EQualization controls boost high-frequency response by up to 6dB.

BRILLIANCE control increases the gain (prior to limiting) of the 6.2kHz to 15kHz band. Produces an audibly attractive effect with increased "air" and "transparency" (similar to that of a "psychoacoustic exciter").

PRESENCE control increases the gain (prior to limiting) of the 3.7kHz band. The 3.7kHz band limiter will resist such gain increase to prevent introducing excess stridency into material with excessive presence energy.

BASS EQualization controls adjust the amount of bass boost. Separate controls for left and right channels (all other controls affect both channels) provide a peaking boost to achieve solid, punchy bass from most consumer radios without exciting the mid-bass dashboard resonances in cars. Range is 0dB to +10dB; center frequency is 65Hz; "Q" is 1.4 (approximately 1 octave). .

CLIPPING control adjusts signal level going into the multiband clippers and therefore determines the amount of peak limiting done by clipping. Range is -4dB to +2dB. This control governs the trade-off between loudness and distortion.

COMPressor switch disables the limiters and clippers when set to PRoof (used for testing).

DENSITY control adjusts signal level going into the six-band limiter, and therefore controls density of output audio by determining the amount of gain reduction in the six-band limiter. The resulting sound texture can be open and transparent, solid and dense, or somewhere in between. Range is 20dB.

6-BAND LIMITER G/R meters show the amount of gain reduction for each of the six limiter bands. Note that the gain reduction in the 6.2kHz band is controlled by, and is always identical to, the gain reduction in the 3.7kHz band.

Fig. 3-1: XT2 Controls and Meters

INPUT ATTENUATORS (L and R) adjust the signal level going into the 8100A + XT2 System and therefore determine the range of gain riding provided by the AGC/compressor.

CLIPPING control effect is identical to the XT2's DENSITY control. Leave the 8100A's CLIPPING control set to "0", and use the XT2's DENSITY control instead.

H-F LIMITING control has no effect in the 8100A + XT2 System. Leave this control set to "5".

RELEASE TIME control adjusts how fast the gain of the "master" compressor increases when the program material gets soft. Settings toward "SLOW" cause the compressor to act as a slow "hand on the pot". Settings toward "FAST" result in increased program density. Changing the RELEASE TIME control setting has less effect upon audio texture when the OPTIMOD-FM is operated with the XT2 than when it is operated without the XT2.

BASS COUPLING control determines the range of dynamic low-frequency (below 200Hz) shelving equalization. Setting the control toward "INDEPENDENT" provides substantially more dynamic equalization than setting it toward "WIDEBAND".

GATE THRESHOLD control determines the input level that system considers "noise". Audio below this level causes the dual-band AGC/compressor to gate, effectively freezing gain to to prevent noise breathing.

Fig. 3-2: 8100A Controls and Meters
Used in Adjusting the 8100A + XT2 System

1. RECOMMENDED SETTINGS FOR THE BEST SOUND

The **8100A + XT2** System is very flexible, enabling you to fine-tune your air sound for your target audience and desired market position.

Figure 3-3 details four sets of recommended settings. Each set produces a different sound texture, and each incorporates a different set of trade-offs between openness, loudness, brightness, and distortion.

Start with one of these sets of recommended settings. Spend some time listening critically to your on-air sound. Listen to a wide range of the program material typical of your format, and listen on several types of radios (not just on your studio monitors). Then, if you wish, customize your sound using the information in "Customizing the Settings", which follows.

The four sounds produced by the recommended settings are:

OPEN An "unprocessed" sound with a nice sense of dynamic range. With these settings, the XT2 provides gentle "automatic equalization" to keep the frequency balance consistent from record to record (especially those recorded in different eras). And for "background music" formats, these settings ensure that your sound doesn't lose its highs and lows.

Formats: Beautiful Music, Light Pop.

TALK Processing for this sound keeps the levels of announcers and guests consistent, pulls low-grade phone calls out of the mud, and keeps a proper balance between voice and commercials. Voice is the most difficult audio to process, but these settings result in a most favorable trade-off between consistency, presence, and distortion.

Format: Talk.

SMOOTH The sound texture for the station that values a clean, easy-to-listen-to sound with a tasteful amount of punch, presence, and brightness added when appropriate. This is an "unprocessed" sound that sounds just right on music and voice when listened to on small table radios, car radios, portables, or home hi-fi systems.

Formats: Album-Oriented Rock, Adult Contemporary, Modern Country, Oldies, Talk.

COMPETITIVE This is the major market "competitive" sound, emphasizing loudness as well as clean audio. The sound from cut to cut and announcer to announcer is remarkably consistent as the "texture" of music is noticeably altered to a standard. Bass has an ever-present punch, there's always a sense of presence, and highs are in perfect balance to the mids, no matter what was on the original recording.

With these settings, your sound is getting farther away from the balance and texture of the original recording. We think that this is as far as processing can go without causing noticeable listener fatigue.

Formats: Adult Contemporary, Contemporary Hit Radio, Oldies, Modern Country, Urban.

	SOUND TEXTURE:			
	Open	**Talk**	**Smooth**	**Competitive**
8100A Controls:				
INPUT ATTENUATORS				
Adjust to produce no more than the indicated gain reduction on typical program material, as shown on the OPTIMOD-FM's TOTAL MASTER G/R meter:				
G/R Meter:	*0–5dB*	*5–10dB*	*5–10dB*	*10–15dB*
CLIPPING	0	0	0	0
H-F LIMITING	5	5	5	5
RELEASE TIME	8	7	6.5	4
BASS COUPLING	8	7	7	6
GATE THRESHOLD	0	2	4	4
PILOT	ON	ON	ON	ON
CROSSTALK TEST	OPERATE	OPERATE	OPERATE	OPERATE
COMPRESSOR	OPERATE	OPERATE	OPERATE	OPERATE
LIMITER	OPERATE	OPERATE	OPERATE	OPERATE
XT2 Controls:				
DENSITY				
Adjust to produce no more than the indicated gain reduction on typical program material, as shown on the XT2's 700Hz and 1.6kHz meters:				
Meters:	*2–3dB*	*2–3dB*	*2–3dB*	*4–5dB*
CLIPPING	+1	0	+1	+0.5
BASS EQ (L & R)	2	2	3	3
PRESENCE	2	2	2.5	3
BRILLIANCE	3	2	4	4
COMP	OPERATE	OPERATE	OPERATE	OPERATE

Fig. 3-3: Recommended Control Settings

2. CUSTOMIZING THE SETTINGS

The controls in the 8100A + XT2 System give you the flexibility to customize your station sound. But as with any audio processing system, proper adjustment of these controls requires proper balancing of the trade-offs between loudness, density, brightness, and audible distortion. The following provides the information you need to adjust the 8100A + XT2 System controls to suit your format, taste, and competitive situation.

1) Some audio processing concepts.

Loudness is increased by reducing the peak-to-average ratio of the audio. If peaks are reduced, the average level can be increased within the modulation limits permitted. The effectiveness with which this can be accomplished without introducing objectionable side effects (like clipping distortion) is the single best measure of audio processing effectiveness. Compression reduces dynamic range in a manner similar to "riding the gain"; limiting and clipping reduce the short-term peak-to-average ratio of the audio.

Compression reduces the difference in level between the soft and loud sounds to make more efficient use of permitted peak level limits, resulting in a subjective increase in the loudness of soft sounds. It *cannot* make loud sounds seem louder.

Six-band limiting increases audio density. Increasing density can make loud sounds seem louder, but can also result in an unattractive "busier", "flatter", or "denser" sound. It is very important to be aware of the many negative subjective side effects of excessive density when setting controls which affect the density of the processed sound.

Clipping sharp peaks does not produce any audible side effects when done moderately. Excessive clipping, however, will be perceived as audible distortion.

The 8100A + XT2 System is designed to allow you to make maximum use of compression, limiting, and clipping, while minimizing the associated processing artifacts. It is important, however, to remember that *there is a fundamental trade-off between loudness, brightness, density, and distortion.*

2) Compression, density, and loudness.

The compression which takes place in OPTIMOD-FM makes audio levels more consistent without significantly altering texture. The XT2's six-band limiting audibly changes the density of the sound and dynamically re-equalizes it as necessary (booming bass is tightened; weak, thin bass is brought up; highs are always present and consistent in level).

The various combinations of *compression* and *density* offer great flexibility:

> **Light compression + light limiting** yields a wide sense of dynamics, with a small amount of automatic re-equalization.
>
> **Moderate compression + light limiting** produces an open, natural quality with automatic re-equalization and increased consistency of frequency balance.
>
> **Light compression + moderate limiting** gives a more "dense" sound.
>
> **Moderate compression + moderate limiting** results in a "wall of sound" effect which may cause listener fatigue.

Adjust OPTIMOD-FM to produce the desired amount of compression, and then fine-tune the limiting and clipping with the XT2's controls.

The RELEASE TIME control on OPTIMOD-FM affects the amount of compression (reduction in dynamic range) by the dual-band compressor in OPTIMOD-FM. Lower (faster) settings result in a more consistently loud output, while higher (slower) settings allow a wider variation in dynamic range. To avoid objectionable pumping, do not set this control below "4".

The DENSITY control on the XT2 affects the relative amount of six-band limiting. Adjust it to your taste and format requirements. Used lightly, the limiter produces an open, re-equalized sound.

The DENSITY setting is *critical to sound quality* – listen carefully as you adjust the controls. There is a point beyond which increasing density will no longer yield more loudness, and will simply degrade the punch and definition of the sound.

We recommend no more than 5dB gain reduction as shown on the meters for the 700Hz and 1.6kHz bands. More than 5dB will often create a "wall of sound" effect that many find fatiguing.

3) Clipping, loudness, and distortion.

The CLIPPING control on the XT2 determines the primary loudness/distortion trade-off. However, for a given setting of this control, perceived clipping distortion will increase as the DENSITY control is advanced, and the CLIPPING control may have to be turned down to compensate.

When using moderate amounts of limiting, we recommend that the CLIPPING control on the XT2 be set to "0". Conversely, if you are operating with light amounts of limiting (2–3dB in midrange), it is often possible to turn up the CLIPPING control without suffering from excessive distortion.

If the OPTIMOD-FM's VU meter (set to L or R FILTER OUT) consistently indicates peaks higher than about -2VU (-1VU if the optional FM Filter Card has been installed), some audible distortion is likely, and we recommend operating in this manner only if your competitive situation absolutely demands it.

4) High-frequency equalization: presence, brilliance, and loudness.

Controls are provided on the XT2 to increase the presence and brilliance of program material. It is important to understand how these controls interact with other 8100A + XT2 System controls.

The PRESENCE control boosts the 2–6kHz region. Turning up the PRESENCE control can increase loudness substantially.

The audible effect of the PRESENCE control is closely associated with the amount of gain reduction in the 3.7kHz band. With low levels of gain reduction, the effect is an actual boost in the level of energy in the presence region. As gain reduction in the 3.7kHz band is increased (by turning the DENSITY control up or the CLIPPING control down), the PRESENCE control will have progressively less audible effect. The limiter for the 3.7kHz band will tend to reduce the effect of the PRESENCE boost (in an attempt to keep the gain constant) to prevent excessive stridency in program material which already has a great deal of presence

energy. So, with large amounts of gain reduction the density of presence region energy will be increased more than will the level of energy in that region.

Nevertheless, if less than 5dB gain reduction is used in the 3.7kHz and 6.2kHz bands, the PRESENCE control will have a significant audible effect almost all of the time. Use the PRESENCE control with caution. Excessive presence boost tends to be audibly strident and fatiguing. And the sound quality, although loud, can be very irritating. A maximum of 3–4dB boost is suggested, although 6dB can be achieved.

The BRILLIANCE control boosts the region centered at 10kHz. In general, a brilliance boost is audibly attractive – similar to the effect produced by a "psychoacoustic exciter".

Unlike the PRESENCE control, the BRILLIANCE control will have an audible effect at all times. Interestingly (because the 3.7kHz band limiter controls the gain reduction in the 6.2kHz band also), turning up the PRESENCE control may *decrease* energy in the 6.2kHz band, since you will be increasing the gain reduction in *both* the 3.7kHz and 6.2kHz bands. You may wish to compensate for this effect by turning up the BRILLIANCE control.

Excessive brilliance boost can also increase the noticeability of tape hiss and distortion in program material that is less than perfectly clean. We suggest no more than 4dB boost as a practical maximum, unless source material is primarily from compact disk.

5) Bass equalization.

The 8100A + XT2 System's three bass equalization controls give you separate control of "warmth" and "punch". Because the XT2 often increases the brightness of program material, some bass boost is usually desirable to keep the sound spectrally well-balanced.

Adjustment of bass equalization must be determined by individual taste and by the requirements of your format. Be sure to listen on a wide variety of radios – it's possible to create a very muddy sound in certain cars by over-equalizing the bass. Be careful!

The OPTIMOD-FM's BASS COUPLING control influences the amount of "warmth" added to bass-shy material by using the dual-compressor as a dynamic low-frequency (below 200Hz) shelving equalizer. Setting the BASS COUPLING control toward "INDEPENDENT" will increase the average amount of bass boost, while setting it toward "WIDEBAND" will result in less bass boost.

The XT2's BASS EQ controls provide a peaking boost (at 65Hz) to achieve a solid, punchy bass from most decent consumer radios. We recommend a +2 to +3dB boost for most formats.

6) More on distortion.

As indicated above, a major potential cause of distortion is excess clipping. Another cause is poor-quality source material, including the effects of the station's playback machines, electronics, and STL. If the source material is even slightly distorted, that distortion can be greatly exaggerated by the XT2 – particularly if a large amount of gain reduction is used. If objectionable distortion is heard when the OPTIMOD-FM's VU meter (set to L or R FILTER OUT) is indicating -2VU or less (-1VU or less if the optional FM Filter Card ACC-22 has been installed), source quality is the most likely cause. See Appendix K of the OPTIMOD-FM Operating Manual for a discussion of how to improve source quality.

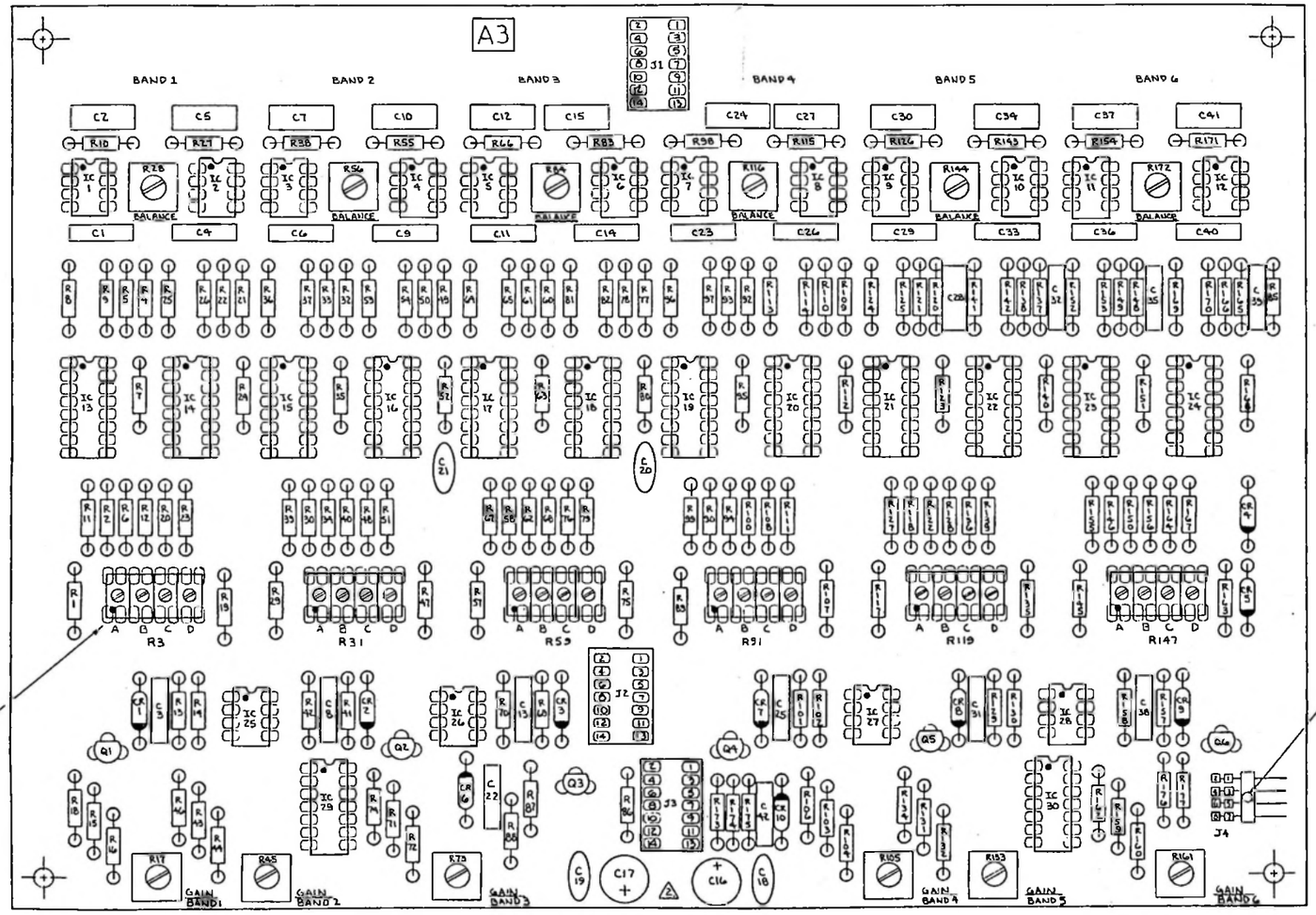

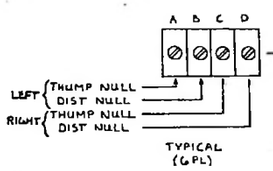

1. TICK MARKS INDICATE PIN ONE OF IC'S, MODULES; CATHODE OF DIODES; POSITIVE SIDE OF CAPACITORS; EMITTER OF TRANSISTORS.

NOTES:

orban	Orban Associates Inc.
TITLE:	ASSEMBLY DRAWING VCA BOARD #A3 30760-000-03

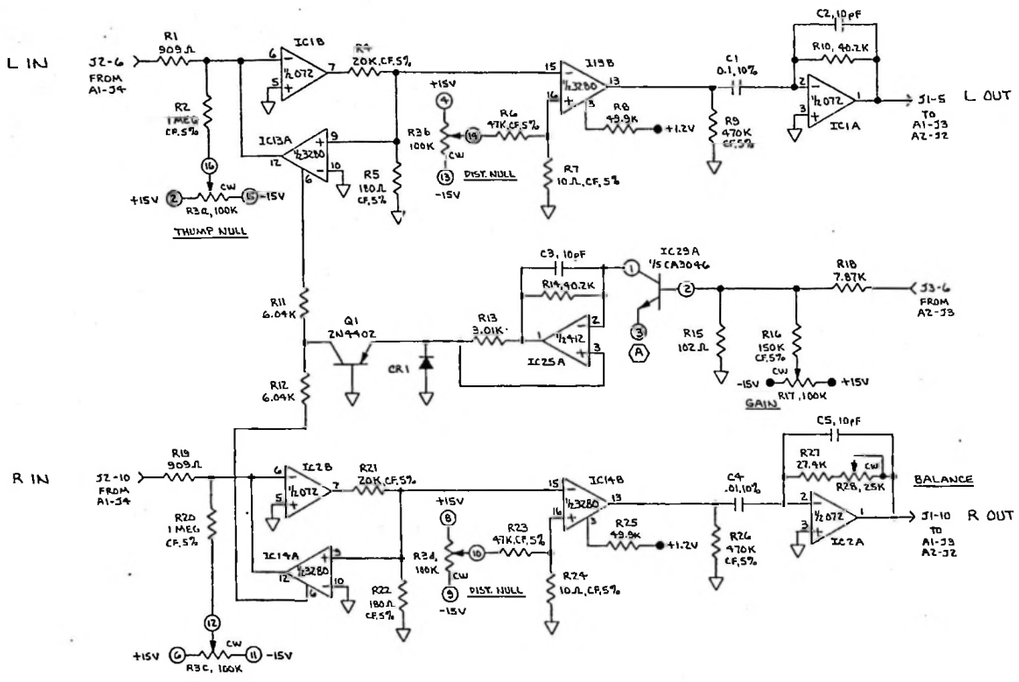

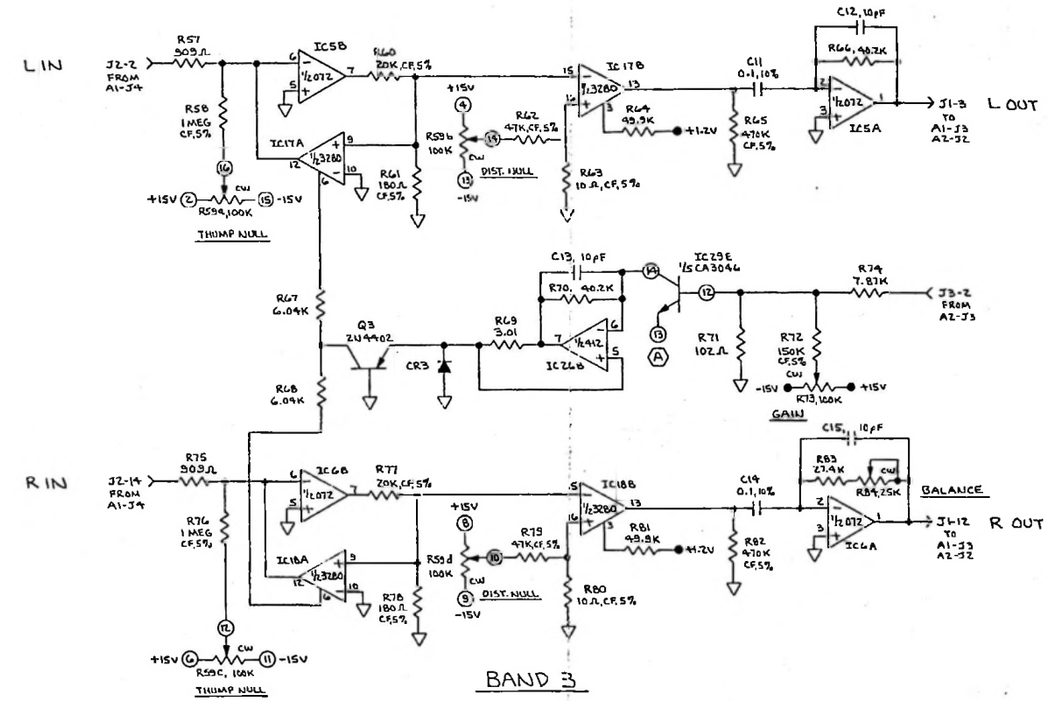

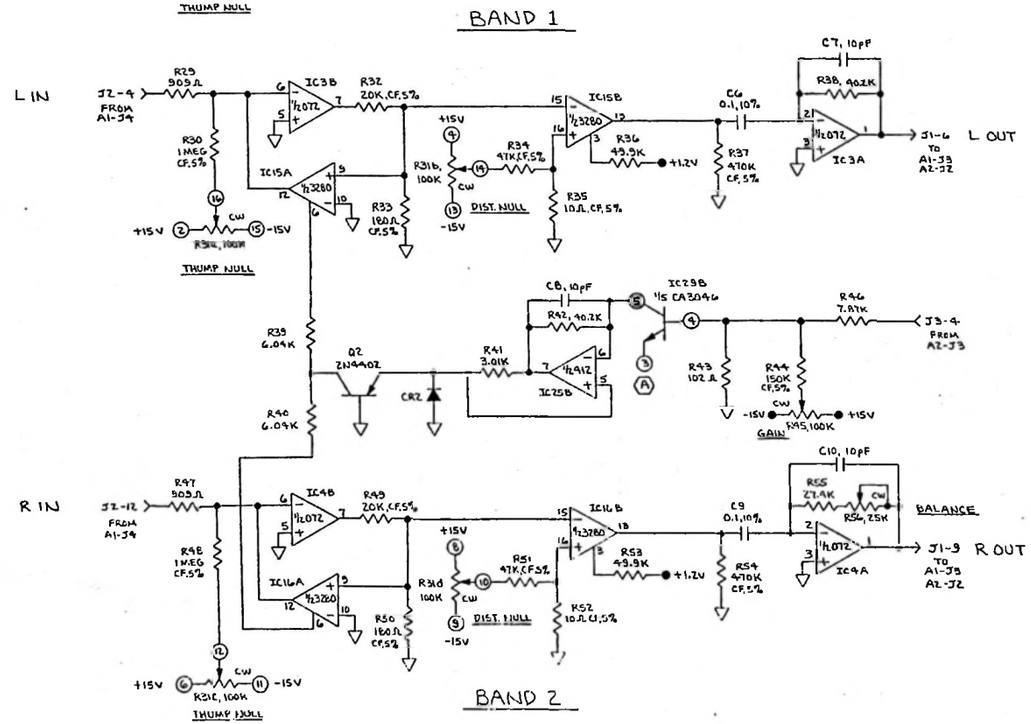

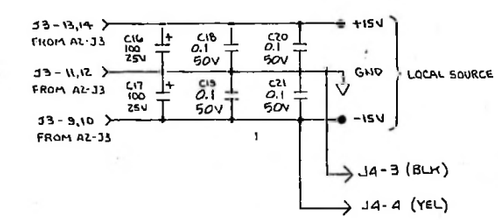

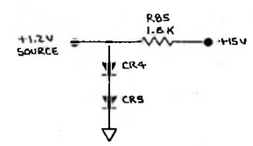

VCA BIAS SOURCE

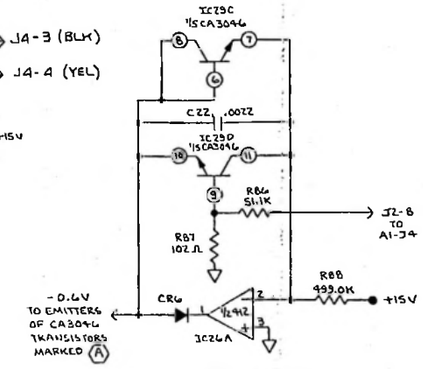

REFERENCE VOLTAGE

IC POWER & GROUND PINS			
DEVICE	+V	-V	GND
TL072	8	4	—
LF412	8	4	—
5532	8	4	—
3280	11,14	1,4,8	—

REFERENCE DESIGNATORS		
ITEM	LAST USED	NOT USED
R	175	—
IC	30	—
C	92	—
CR	10	—
Q	6	—

NOTES: UNLESS OTHERWISE SPECIFIED

1. ALL CAPS ARE IN MICROFARADS
2. ALL RESISTORS ARE 1/8W, MF, 1% (RN550)
3. ALL DIODES ARE 1N4148

orban Orban Associates Inc.

TITLE: SCHEMATIC
VCA BOARD #A3
60077-000-03, 1 OF 2

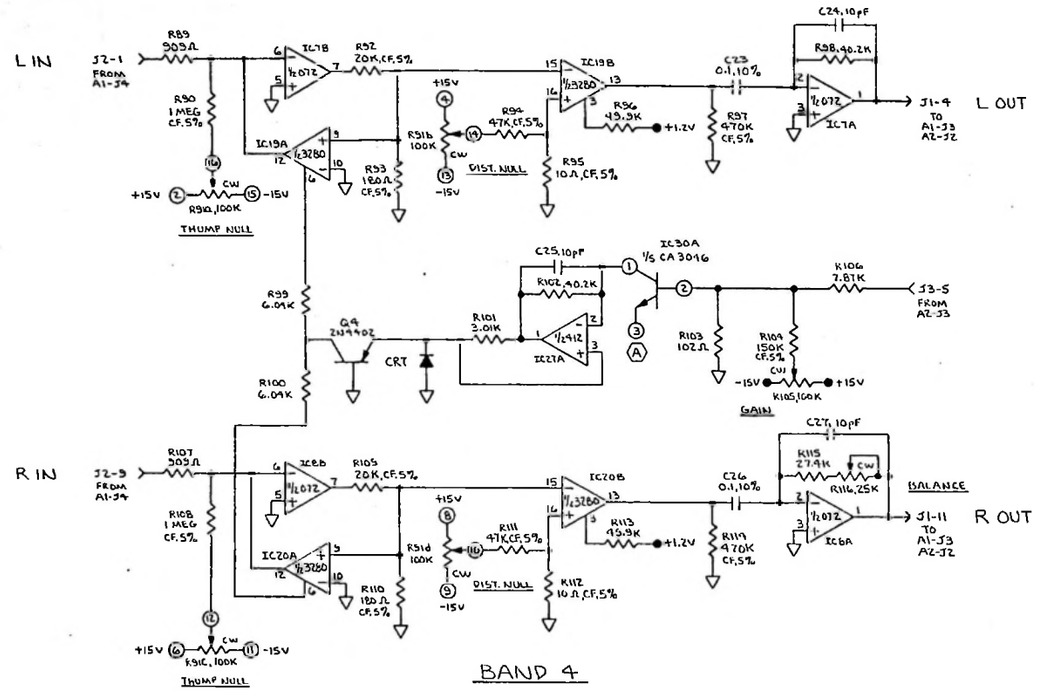

BAND 4

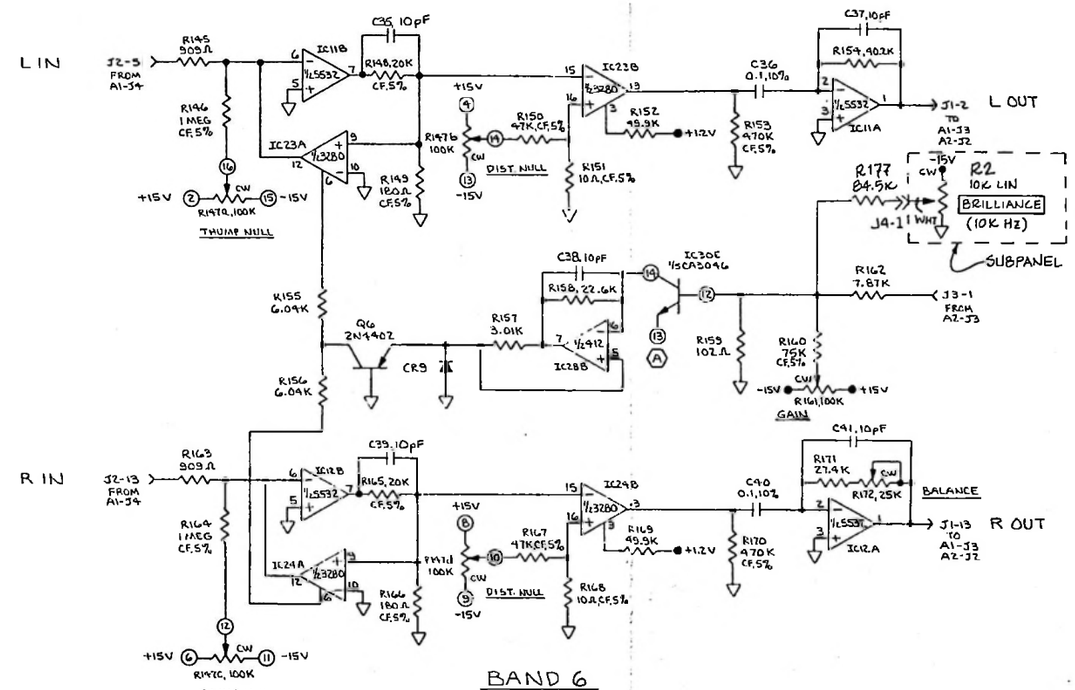

BAND 6

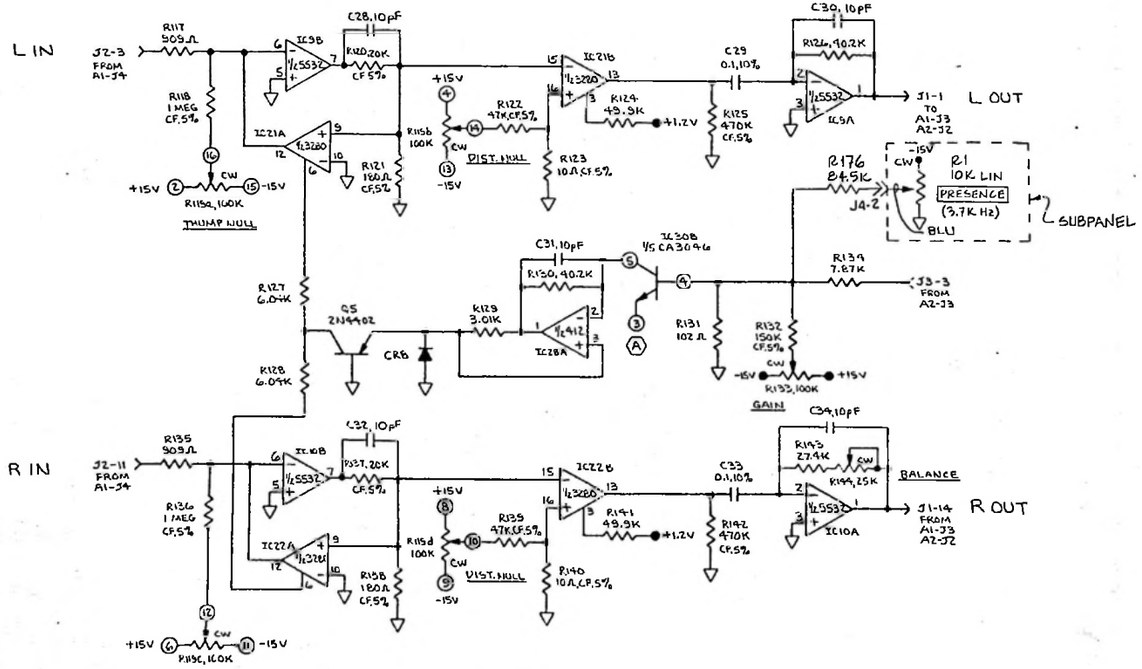

BAND 5

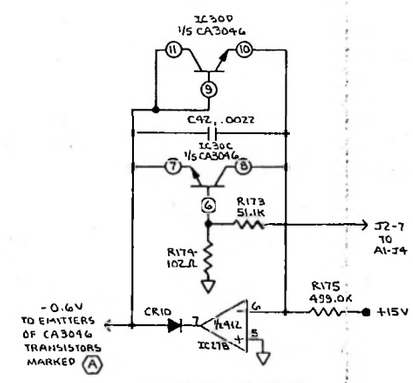

REFERENCE VOLTAGE

orban

Orban Associates Inc.

TITLE:

SCHEMATIC
VCA BOARD #A3
60077-000-03, 2 OF 2

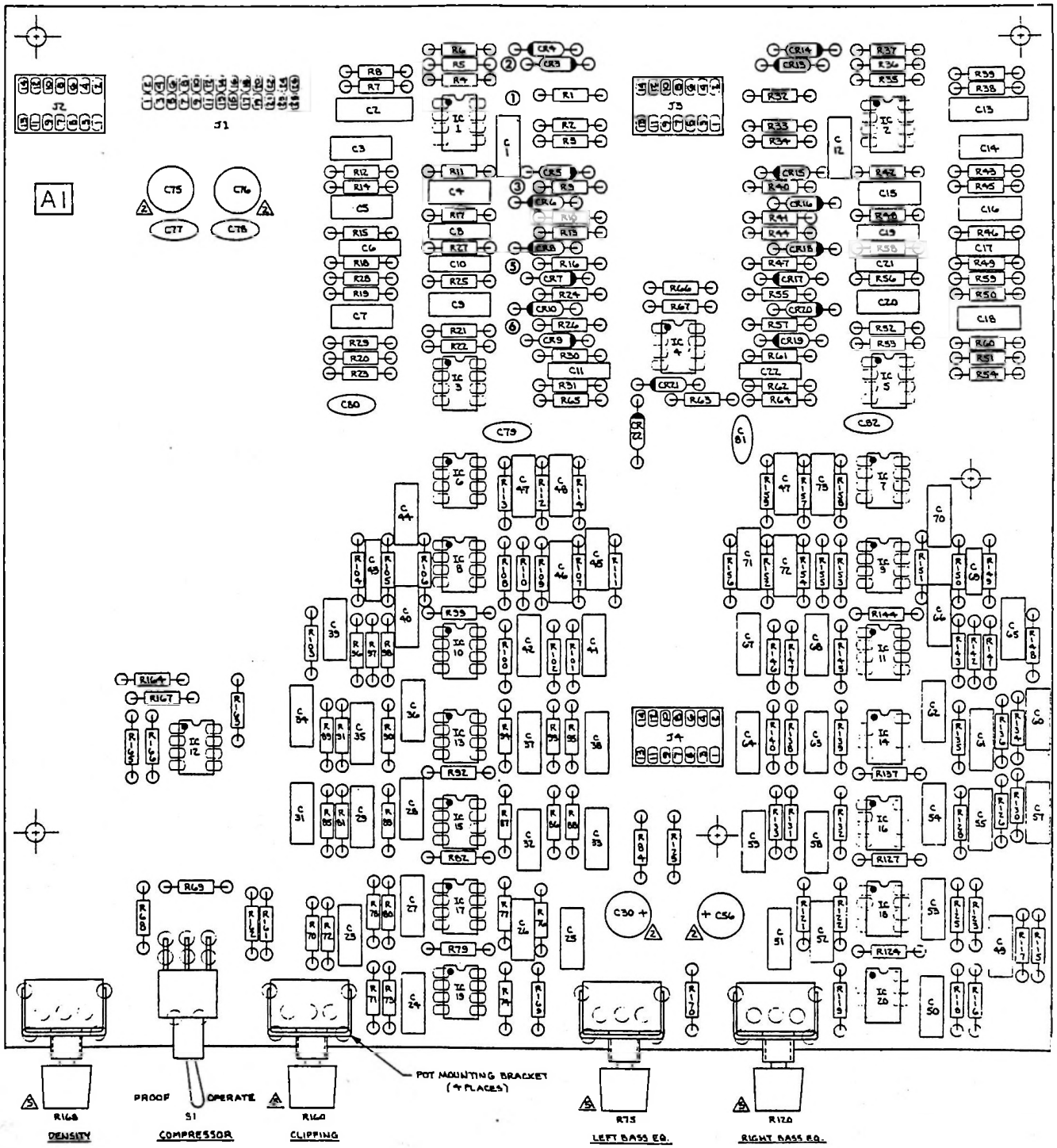

1. TICK MARKS INDICATE PIN ONE OF IC's, MODULES; CATHODE OF DIODES; POSITIVE SIDE OF CAPACITORS; EMITTER OF TRANSISTORS.

NOTES:

orban	Orban Associates Inc.
TITLE:	ASSEMBLY DRAWING CROSSOVER BOARD #A1 30770-000-02

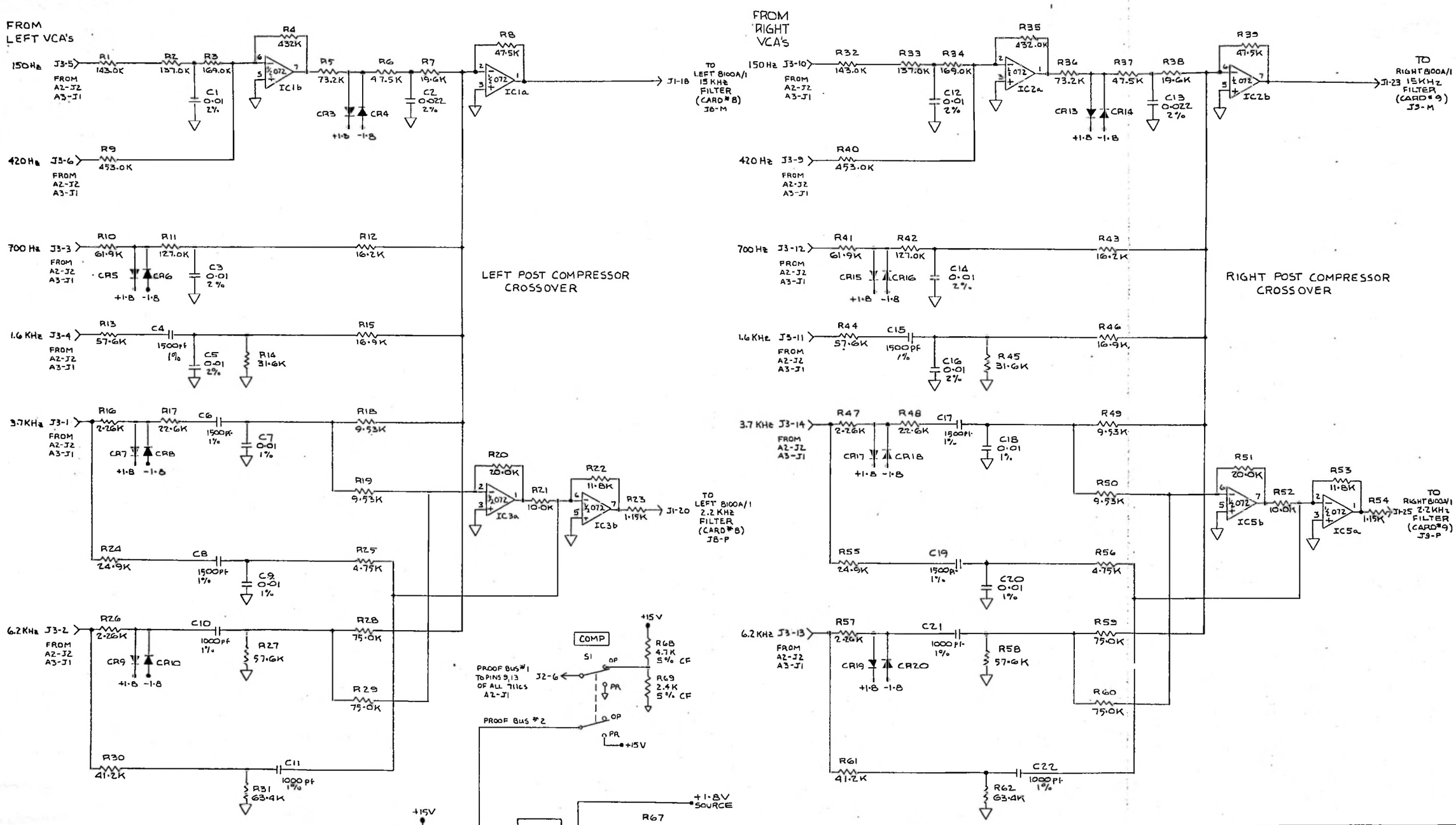

3. ALL CAPACITANCE IN MICROFARADS
2. ALL RESISTORS ARE 1/8 W, MF, 1%, (RN55D)
1. ALL DIODES ARE 1N4148
NOTES: UNLESS OTHERWISE SPECIFIED

REFERENCE DESIGNATORS		
ITEM	LAST USED	NOT USED
C	C82	—
CR	CR22	CR1,2,11,12
IC	IC20	IC6a, 7b
R	R170	—
S	1	—

IC POWER + GND PINS			
DEVICE	+V	-V	GND
TL072	8	4	—
4558	8	4	—

orban Orban Associates Inc.

TITLE: SCHEMATIC CROSSOVER BOARD #A1 60078-000-03, 1 OF 3

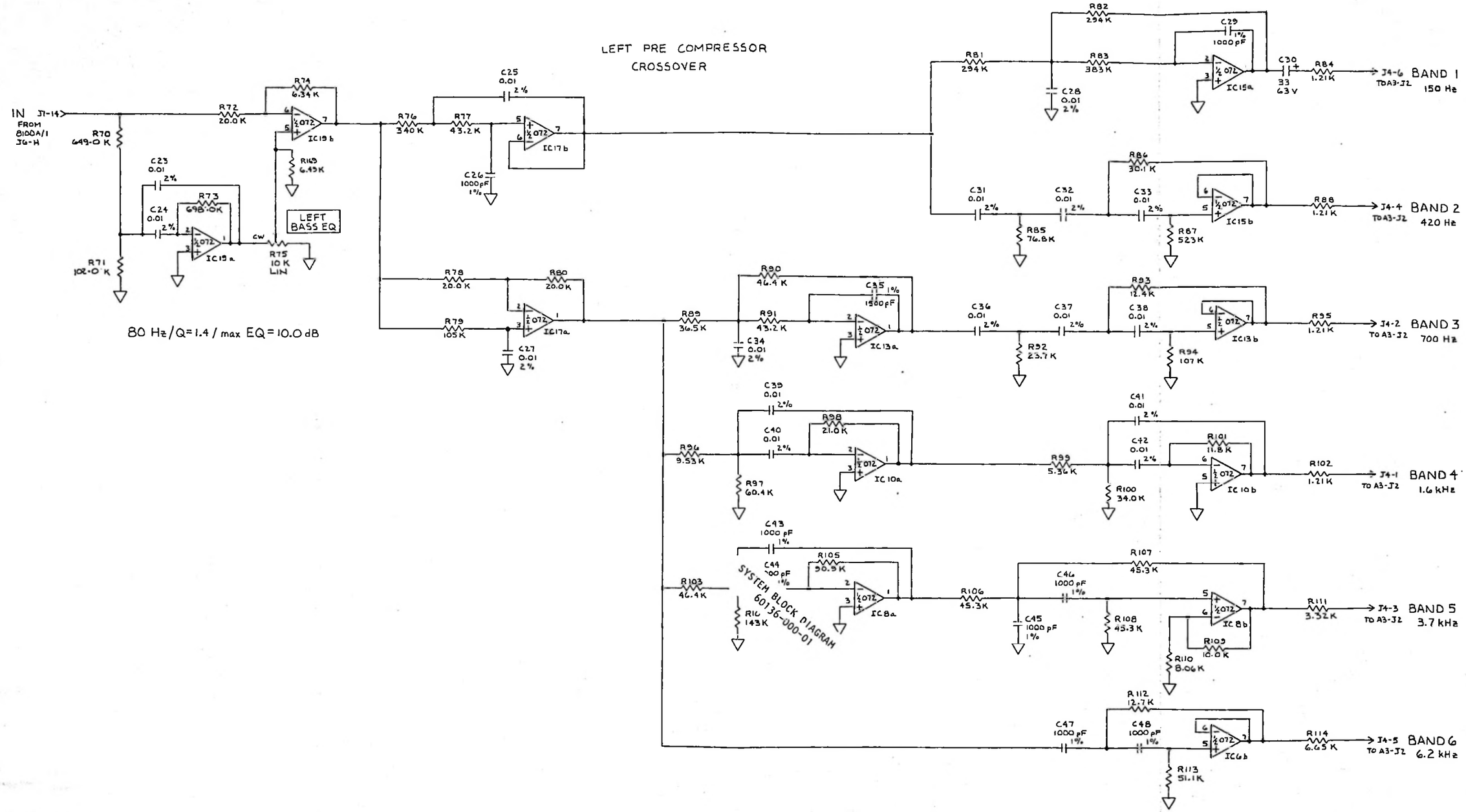

orban Orban Associates Inc.

TITLE: SCHEMATIC
CROSSOVER BOARD #A1
60078-000-03, 2 OF 3

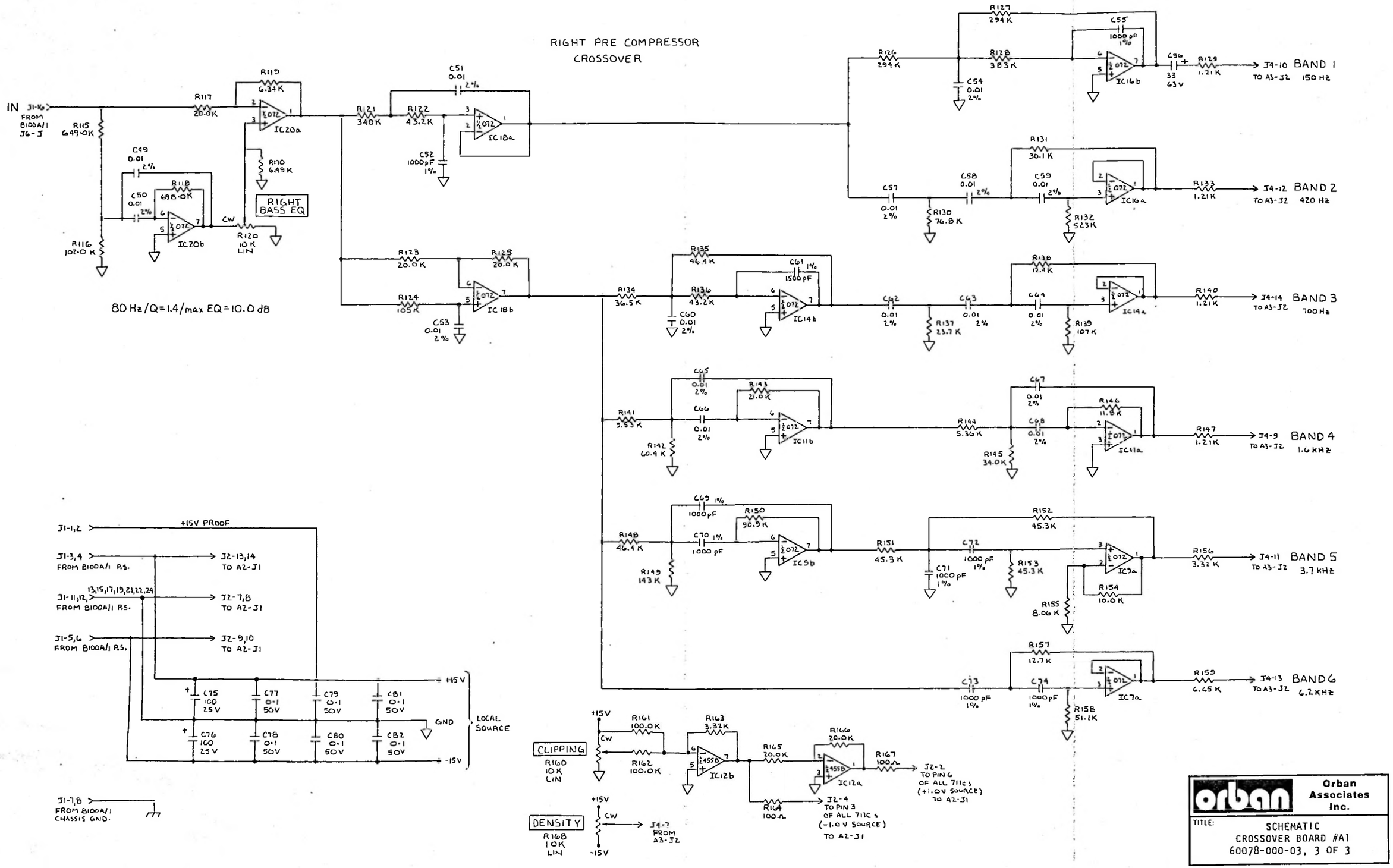

Orban Associates Inc.

TITLE: SCHEMATIC
CROSSOVER BOARD #A1
60078-000-03, 3 OF 3

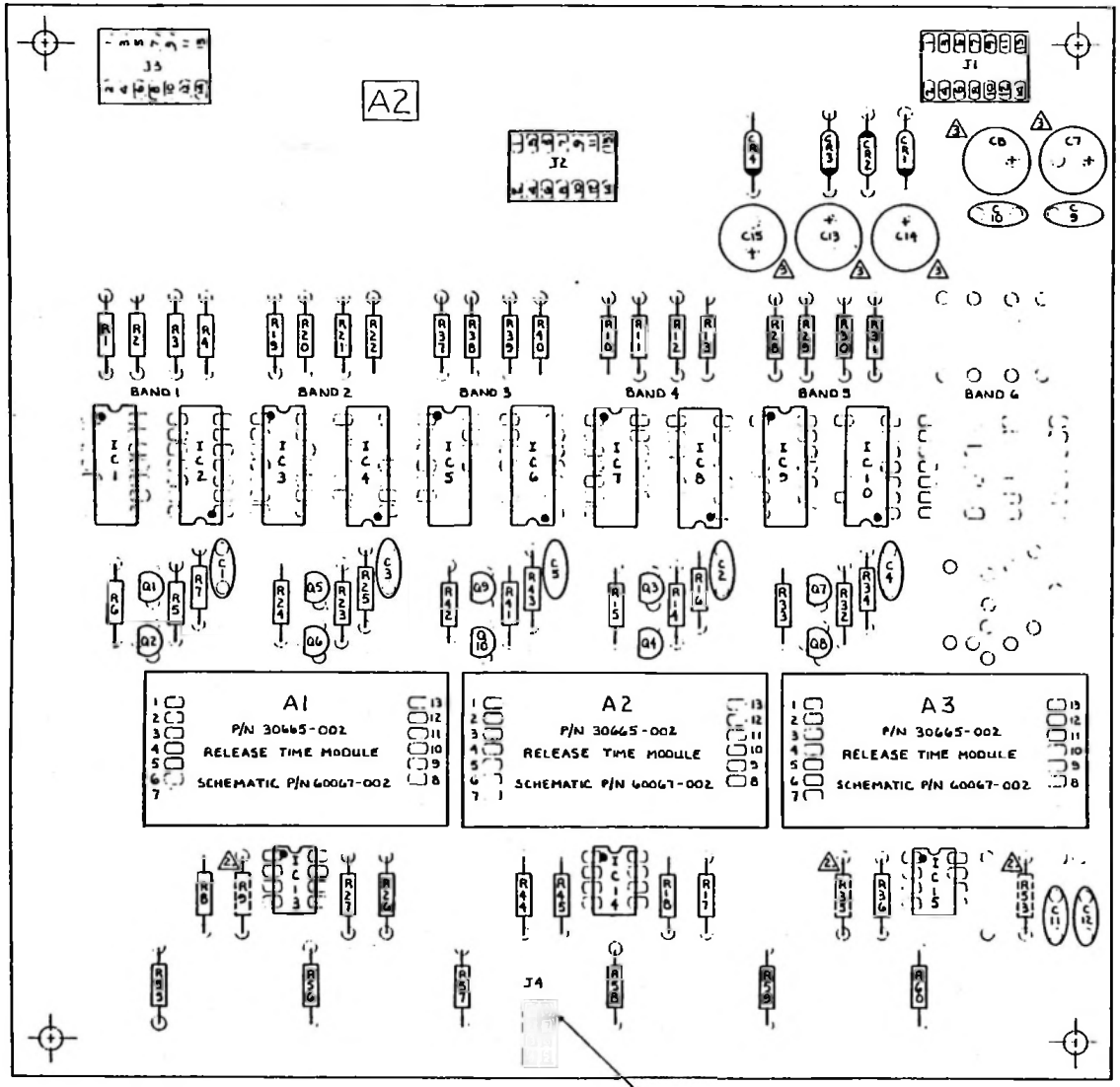

SNIP OFF PIN 8
FLUSH TO HEADER BODY

NOTES:

1. TICK MARKS INDICATE PIN ONE OF IC'S, MODULES; CATHODE OF DIODES; POSITIVE SIDE OF CAPACITORS; EMITTER OF TRANSISTORS.

orban

Orban Associates Inc.

TITLE: ASSEMBLY DRAWING
LIMITER CONTROL BOARD #A2
30765-000-05

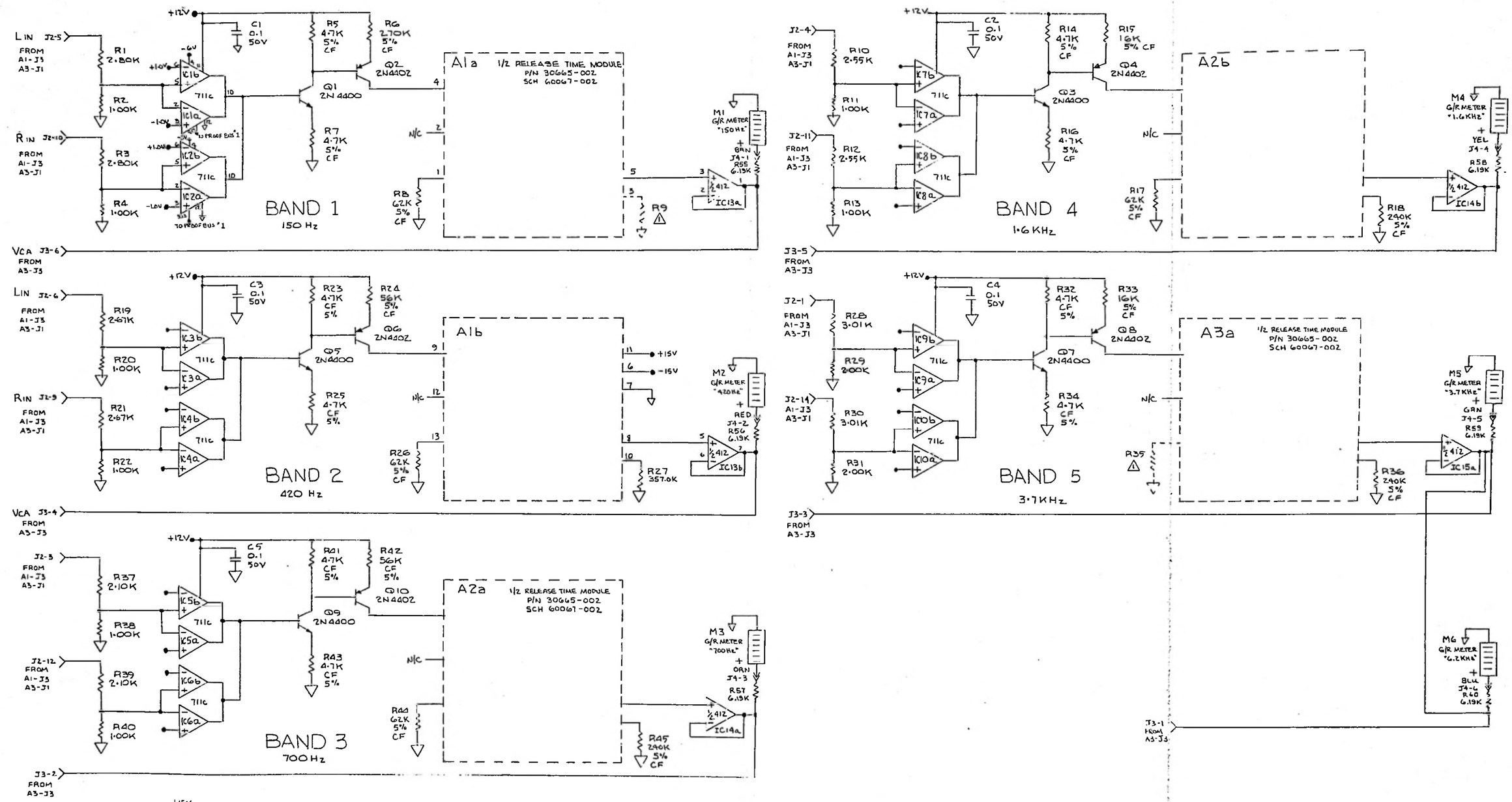

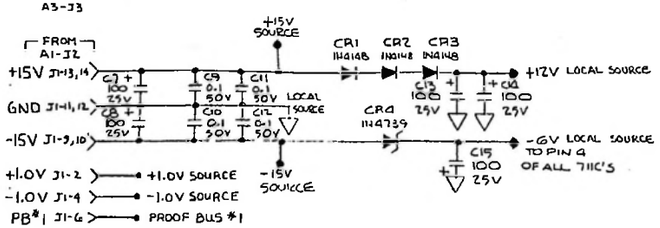

I.C. PWR +&GND PINS			
DEVICE	+V	-V	GND
412	8	4	–
711C AS SHOWN	–	–	–

NOTES:
1. ALL CAPACITORS ARE IN MICROFARADS
2. ALL RESISTORS ARE 1/8W, MF, 1%, (RN55D)
3. ⚠ NOT LOADED

orban Orban Associates Inc.

TITLE: SCHEMATIC
LIMITER CONTROL BOARD #A2
60076-000-05

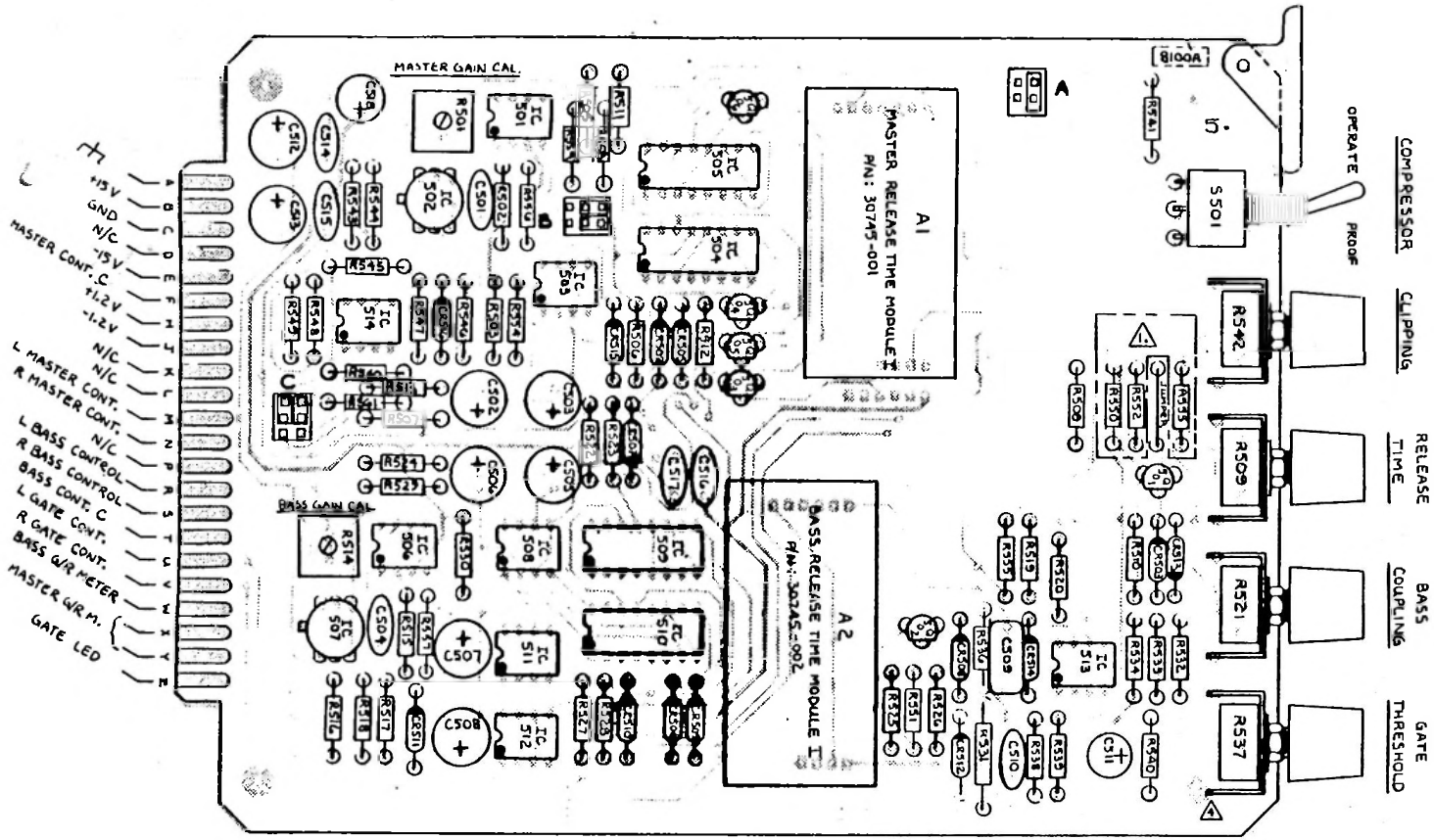

JUMPERS	POSITION: NORMAL	POSITION: 8100A ACCESSORY CHASSIS (ACC-6)
A		
B		
C		

6. JUMPERS SHOWN IN NORMAL (AS SHIPPED) POSITION.

3. REF SCHEMATIC: CARD#5 6003S-VER-XX,

2. THIS ASSY. SUPERSEDES ASSY NO. 30450-VER-05.

NOTES:

⚠ VERSION -001 = OPTIMOD-FM 8100A, OMIT R552 & R553, INSTALL R550.

-002 = OPTIMOD-TV 8100A, OMIT R550, INSTALL R552 & R553.

orban Orban Associates Inc.

TITLE: ASSEMBLY DRAWING
8100A/1 AUDIO CONTROL CARD #5
30715-000-03

Provided for 8100A owners who have converted their units to 8100A/1 via Retrofit Kit RET-27 - See Part 2 of this Manual.

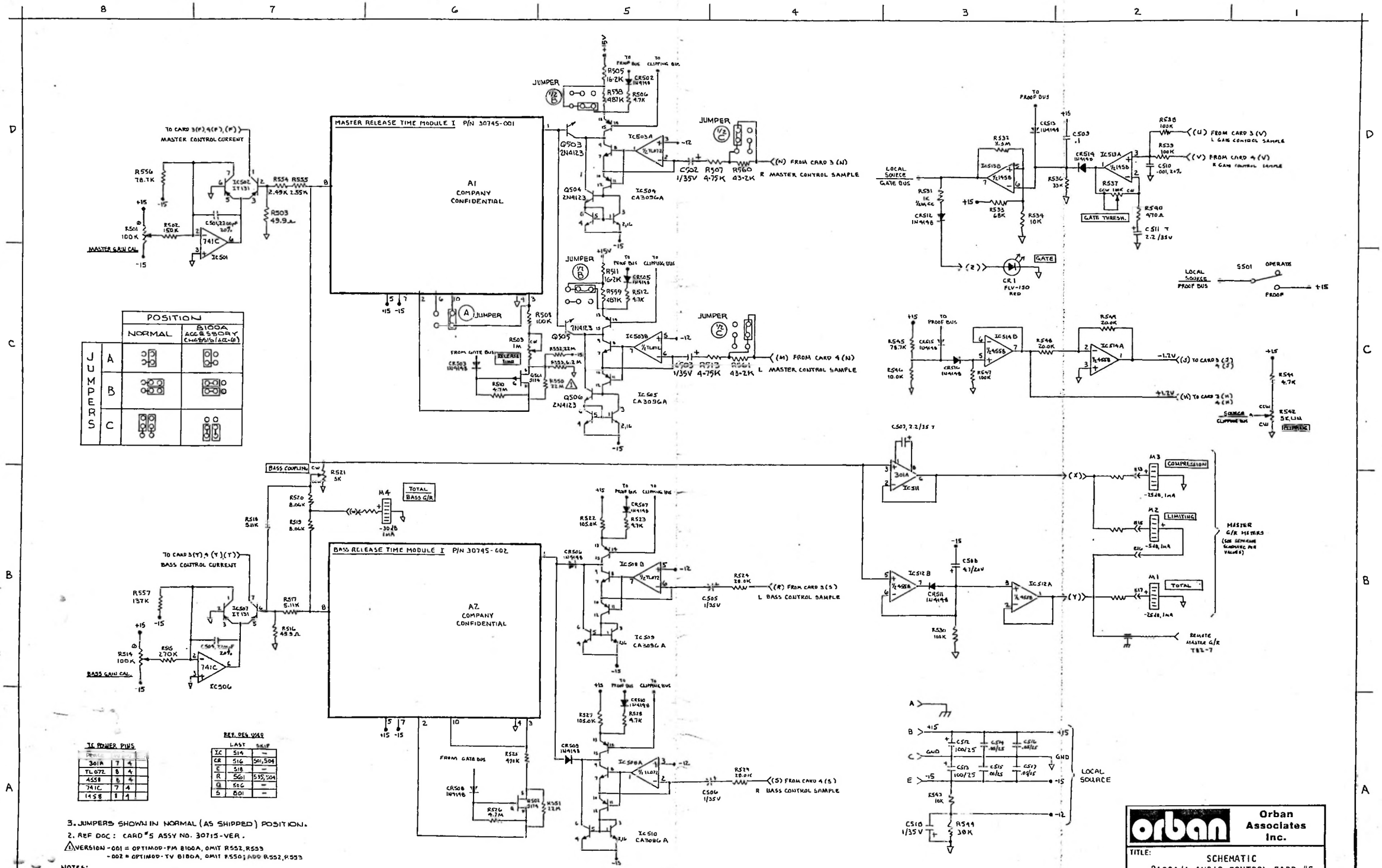

JUMPERS	POSITION NORMAL	POSITION 8100A ACC & SECRY CHASSIS (ACC-6)
A		
B		
C		

IC POWER PINS		
301A	7	4
TL072	8	4
4558	8	4
741C	7	4
1458	8	4

REF. DES. USED	LAST	SKIP
IC	514	—
CR	516	501, 504
C	518	—
R	561	535, 504
Q	506	—
S	801	—

3. JUMPERS SHOWN IN NORMAL (AS SHIPPED) POSITION.
2. REF DOC: CARD #5 ASSY NO. 30715-VER.
⚠ VERSION -001 = OPTIMOD-FM 8100A, OMIT R552, R553
-002 = OPTIMOD-TV 8100A, OMIT R550; ADD R552, R553

NOTES:

Provided for 8100A owners who have converted their units to 8100A/1 via Retrofit Kit RET-27 - See Part 2 of this Manual.

Orban Associates Inc.

TITLE: SCHEMATIC
8100A/1 AUDIO CONTROL CARD #5
60035-VER-07

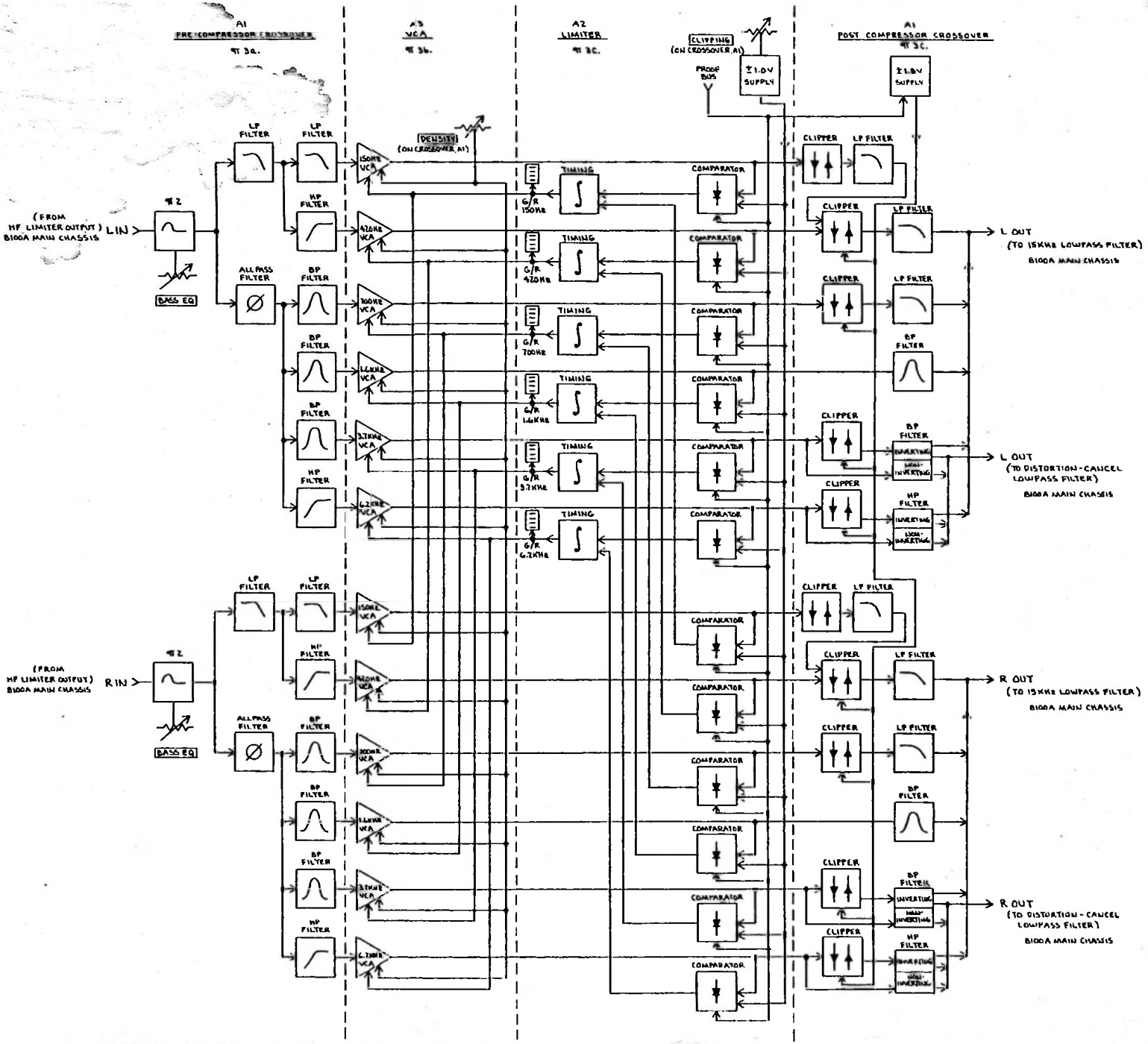

orban

Orban Associates Inc.

TITLE:

BLOCK DIAGRAM
8100A/XT2
60136-000-01